NEW AGE

MACHINE DRAWING

(THIRD EDITION)

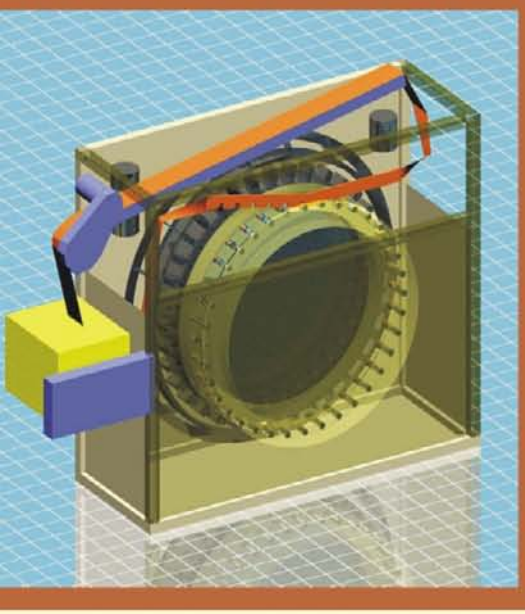

K.L. Narayana
P. Kannaiah
K. Venkata Reddy

NEW AGE INTERNATIONAL PUBLISHERS

www.EngineeringBooksPdf.com

MACHINE DRAWING

www.EngineeringBooksPdf.com

This page intentionally left blank

www.EngineeringBooksPdf.com

MACHINE DRAWING

- First angle projection
- As per the latest BIS standards
- For Degree and AMIE

Third Edition

Dr. K.L. Narayana

Dr. P. Kannaiah

K. Venkata Reddy

PUBLISHING FOR ONE WORLD

NEW AGE INTERNATIONAL (P) LIMITED, PUBLISHERS

New Delhi • Bangalore • Chennai • Cochin • Guwahati • Hyderabad
Jalandhar • Kolkata • Lucknow • Mumbai • Ranchi

Visit us at **www.newagepublishers.com**

www.EngineeringBooksPdf.com

Copyright © 2006, 1999, 1994, New Age International (P) Ltd., Publishers
Published by New Age International (P) Ltd., Publishers

All rights reserved.

No part of this ebook may be reproduced in any form, by photostat, microfilm, xerography, or any other means, or incorporated into any information retrieval system, electronic or mechanical, without the written permission of the publisher.
All inquiries should be emailed to ***rights@newagepublishers.com***

ISBN (13) : 978-81-224-2518-5

PUBLISHING FOR ONE WORLD

NEW AGE INTERNATIONAL (P) LIMITED, PUBLISHERS
4835/24, Ansari Road, Daryaganj, New Delhi - 110002
Visit us at **www.newagepublishers.com**

www.EngineeringBooksPdf.com

FOREWORD

I congratulate the authors Dr. P. Kannaiah, Prof. K.L. Narayana and Mr. K. Venkata Reddy of S.V.U. College of Engineering, Tirupati for bringing out this book on "Machine Drawing".

This book deals with the fundamentals of Engineering Drawing to begin with and the authors introduce Machine Drawing systematically thereafter. This, in my opinion, is an excellent approach. This book is a valuable piece to the students of Mechanical Engineering at diploma, degree and AMIE levels.

Dr. P. Kannaiah has a rich experience of teaching this subject for about twenty five years, and this has been well utilised to rightly reflect the treatment of the subject and the presentation of it. Prof. K.L. Narayana, as a Professor in Mechanical Engineering and Mr. K. Venkata Reddy as a Workshop Superintendent have wisely joined to give illustrations usefully from their wide experience and this unique feature is a particular fortune to this book and such opportunities perhaps might not have been available to other books.

It is quite necessary for any drawing book to follow the standards of BIS. This has been done very meticulously by the authors. Besides, this book covers the syllabi of various Indian universities without any omission.

Learning the draughting principles and using the same in industrial practice is essential for any student and this book acts as a valuable guide to the students of engineering. It also serves as a reference book in the design and draughting divisions in industries. This book acts almost as a complete manual in Machine Drawing.

This book is a foundation to students and professionals who from here would like to learn Computer Graphics which is a must in modern days.

I am confident that the students of engineering find this book extremely useful to them.

Dr. M.A. Veluswami
Professor
Machine Elements Laboratory

Department of Mechanical Engineering
INDIAN INSTITUTE OF TECHNOLOGY
CHENNAI-600 036, INDIA

www.EngineeringBooksPdf.com

This page intentionally left blank

www.EngineeringBooksPdf.com

PREFACE TO THIRD EDITION

The engineer, especially a mechanical engineer, needs a thorough knowledge of the working principles of any mechanism he normally deals with. To create interest and to motivate him in this direction, complete revision of the chapter on assembly drawings is done. The chapter provides individual component drawings and knowing the working mechanism of a subassembly, finally the parts are assembled. Hence, exercises/examples are included starting from simple subassemblies to moderately complex assemblies.

The chapter on part drawings provides examples of assembled drawings and the student is expected to make the part drawings after imagining the shapes of them. A revision of this chapter is supposed to provide the required guidance to the knowledge seeker.

The chapter on computer-aided draughting is fully revised keeping in view the present day requirements of the engineering students. The student should be trained not only to use draughting equipment but also to use a computer to produce his latest invention. It is presumed that this chapter will provide him the required soft skills.

The centers of excellence should revise the curriculum frequently, based on the changes needed by the academic requirements. Keeping this in view, the contents of the text are updated wherever necessary and incorporated.

It is hoped that the subject content satisfies both students, teachers and paper setters.

AUTHORS

www.EngineeringBooksPdf.com

This page intentionally left blank

www.EngineeringBooksPdf.com

PREFACE TO FIRST EDITION

Drawing, as an art, is the picturisation of the imagination of the scene in its totality by an individual—the Artist. It has no standard guidelines and boundaries. Engineering drawing on the other hand is the scientific representation of an object, according to certain national and international standards of practice. It can be understood by all, with the knowledge of basic principles of drawing.

Machine drawing is the indispensable communicating medium employed in industries, to furnish all the information required for the manufacture and assembly of the components of a machine.

Industries are required to follow certain draughting standards as approved by International Organisation for Standards (ISO). When these are followed, drawings prepared by any one can convey the same information to all concerned, irrespective of the firm or even the country. Mechanical engineering students are required to practice the draughting standards in full, so that the students after their training, can adjust very well in industries.

This book on Machine Drawing is written, following the principles of drawing, as recommended by Bureau of Indian Standards (BIS), in their standards titled "Engineering drawing practice for schools and colleges"; SP:46-1988.

This is the only book on Machine Drawing, incorporating the latest standards published till now and made available to the students. Typical changes brought in the standards, in respect of names of orthographic views are listed below. These eliminate the ambiguity if any that existed earlier.

The latest designations as recommended below are used throughout this book.

Designation of the views as per IS:696-1972	Designations of the views as per SP:46-1988
1. Front view	The view from the front
2. Top view	The view from above
3. Left side view	The view from the left
4. Right side view	The view from the right
5. Bottom view	The view from below
6. Rear view	The view from the rear

The contents of the book are chosen such that, the student can learn well about the drawing practice of most of the important mechanical engineering components and sub-assemblies, he studies through various courses.

www.EngineeringBooksPdf.com

The principles of working, place of application and method of assembly of all the machine elements dealt with in the book will make the student thorough with the subject of mechanical engineering in general. This will also make the student understand what he is drawing instead of making the drawings mechanically.

This book is intended as a text book for all mechanical engineering students, both at degree and diploma level and also students of AMIE. The contents of the book are planned, after thoroughly referring the syllabi requirements of various Indian universities and AMIE courses.

The chapter on Jigs and Fixtures is intended to familiarise the students, with certain production facilities required for accurate machining/fabrication in mass production.

The chapters on Limits, Tolerances and Fits and Surface Roughness are intended to correlate drawing to production. In this, sufficient stress is given to geometrical tolerances which is not found in any of the textbooks on the topic. The student, to understand production drawings, must be thorough in these topics.

The chapter on Blue Print Reading has been included to train the student to read and understand complicated drawings, including production drawings. This will be of immense use to him, later in his career.

Chapters on Assembly Drawings and Part Drawings are planned with a large number of exercises drawn from wide range of topics of mechanical engineering. The assemblies are selected such that they can be practiced in the available time in the class. The projects like lathe gear box and automobile gear box are developed and included in the chapter on part drawings. These are mentioned in most of the latest syllabi but not found in any of the available books on the subject.

A separate chapter on Production Drawings has been included, to train the student in industrial draughting practices. These types of drawings only guide the artisan on the shop floor to the chief design engineer, in successful production of the product.

We hope that this book will meet all the requirements of the students in the subject and also make the subject more interesting.

Any suggestions and contribution from the teachers and other users, to improve the content of the text are most welcome.

TIRUPATI
August, 1994

AUTHORS

www.EngineeringBooksPdf.com

CONTENTS

Foreword *v*
Preface to Third Edition *vii*
Preface to First Edition *ix*

1 INTRODUCTION 1

1.1 Graphic Language 1
1.1.1 General 1
1.1.2 Importance of Graphic Language 1
1.1.3 Need for Correct Drawings 1
1.2 Classification of Drawings 2
1.2.1 Machine Drawing 2
1.2.2 Production Drawing 2
1.2.3 Part Drawing 2
1.2.4 Assembly Drawing 3

2 PRINCIPLES OF DRAWING 10

2.1 Introduction 10
2.2 Drawing Sheet 10
2.2.1 Sheet Sizes 10
2.2.2 Designation of Sizes 10
2.2.3 Title Block 11
2.2.4 Borders and Frames 11
2.2.5 Centring Marks 12
2.2.6 Metric Reference Graduation 12
2.2.7 Grid Reference System (Zoning) 13
2.2.8 Trimming Marks 13
2.3 Scales 13
2.3.1 Designation 13
2.3.2 Recommended Scales 13
2.3.3 Scale Specification 13
2.4 Lines 14
2.4.1 Thickness of Lines 15
2.4.2 Order of Priority of Coinciding Lines 16
2.4.3 Termination of Leader Lines 17
2.5 Lettering 18
2.5.1 Dimensions 18

www.EngineeringBooksPdf.com

2.6 Sections 19
2.6.1 Hatching of Sections 20
2.6.2 Cutting Planes 21
2.6.3 Revolved or Removed Section 23
2.6.4 Half Section 24
2.6.5 Local Section 24
2.6.6 Arrangement of Successive Sections 24
2.7 Conventional Representation 24
2.7.1 Materials 24
2.7.2 Machine Components 24
2.8 Dimensioning 25
2.8.1 General Principles 25
2.8.2 Method of Execution 28
2.8.3 Termination and Origin Indication 30
2.8.4 Methods of Indicating Dimensions 30
2.8.5 Arrangement of Dimensions 32
2.8.6 Special Indications 33
2.9 Standard Abbreviations 37
2.10 Examples 38

3 Orthographic Projections 43

3.1 Introduction 43
3.2 Principle of First Angle Projection 43
3.3 Methods of Obtaining Orthographic Views 44
3.3.1 View from the Front 44
3.3.2 View from Above 44
3.3.3 View from the Side 44
3.4 Presentation of Views 45
3.5 Designation and Relative Positions of Views 45
3.6 Position of the Object 46
3.6.1 Hidden Lines 47
3.6.2 Curved Surfaces 47
3.7 Selection of Views 47
3.7.1 One-view Drawings 48
3.7.2 Two-view Drawings 48
3.7.3 Three-view Drawings 49
3.8 Development of Missing Views 50
3.8.1 To Construct the View from the Left, from the Two Given Views 50
3.9 Spacing the Views 50
3.10 Examples 51

4 Sectional Views 64

4.1 Introduction 64
4.2 Full Section 64
4.3 Half Section 65
4.4 Auxiliary Sections 66
4.5 Examples 67

www.EngineeringBooksPdf.com

5 Screwed Fasteners 77

5.1 Introduction 77
5.2 Screw Thread Nomenclature 77
5.3 Forms of Threads 78
5.3.1 Other Thread Profiles 79
5.4 Thread Series 80
5.5 Thread Designation 81
5.6 Multi-start Threads 81
5.7 Right Hand and Left Hand Threads 81
5.7.1 Coupler-nut 82
5.8 Representation of Threads 82
5.8.1 Representation of Threaded Parts in Assembly 84
5.9 Bolted Joint 85
5.9.1 Methods of Drawing Hexagonal (Bolt Head) Nut 85
5.9.2 Method of Drawing Square (Bolt Head) Nut 87
5.9.3 Hexagonal and Square Headed Bolts 88
5.9.4 Washers 89
5.9.5 Other Forms of Bolts 89
5.9.6 Other Forms of Nuts 91
5.9.7 Cap Screws and Machine Screws 92
5.9.8 Set Screws 93
5.10 Locking Arrangements for Nuts 94
5.10.1 Lock Nut 94
5.10.2 Locking by Split Pin 95
5.10.3 Locking by Castle Nut 95
5.10.4 Wile's Lock Nut 96
5.10.5 Locking by Set Screw 96
5.10.6 Grooved Nut 96
5.10.7 Locking by Screw 96
5.10.8 Locking by Plate 97
5.10.9 Locking by Spring Washer 97
5.11 Foundation Bolts 98
5.11.1 Eye Foundation Bolt 98
5.11.2 Bent Foundation Bolt 98
5.11.3 Rag Foundation Bolt 98
5.11.4 Lewis Foundation Bolt 99
5.11.5 Cotter Foundation Bolt 100

6 Keys, Cotters and Pin Joints 103

6.1 Introduction 103
6.2 Keys 103
6.2.1 Saddle Keys 103
6.2.2 Sunk Keys 104
6.3 Cotter Joints 109
6.3.1 Cotter Joint with Sleev 111
6.3.2 Cotter Joint with Socket and Spigot Ends 111
6.3.3 Cotter Joint with a Gib 111

www.EngineeringBooksPdf.com

6.4 Pin Joints 112
6.4.1 Knuckle Joint 113

7 Shaft Couplings 115

7.1 Introduction 115
7.2 Rigid Couplings 115
7.2.1 Sleeve or Muff Couplings 115
7.2.2 Flanged Couplings 117
7.3 Flexible Couplings 119
7.3.1 Bushed Pin Type Flanged Coupling 119
7.3.2 Compression Coupling 120
7.4 Dis-engaging Couplings 120
7.4.1 Claw Coupling 120
7.4.2 Cone Coupling 122
7.5 Non-aligned Couplings 123
7.5.1 Universal Coupling (Hooke's Joint) 123
7.5.2 Oldham Coupling 124
7.5.3 Cushion Coupling 125

8 Pipe Joints 127

8.1 Introduction 127
8.2 Joints for Steam Pipes 127
8.2.1 Joints for Cast Iron Pipes 128
8.2.2 Joints for Copper Pipes 129
8.2.3 Joints for Wrought Iron and Steel Pipes 130
8.3 Joints for Hydraulic Pipes 130
8.3.1 Socket and Spigot Joint 131
8.3.2 Flanged Joint 131
8.4 Special Pipe Joints 131
8.4.1 Union Joint 131
8.4.2 Expansion Joint 133
8.5 Pipe Fittings 134
8.5.1 GI Pipe Fittings 135
8.5.2 CI Pipe Fittings 136
8.5.3 PVC Pipes and Fittings 136
8.6 Pipe Layout 140

9 Pulleys 142

9.1 Introduction 142
9.2 Belt Driven Pulleys 142
9.2.1 Flat Belt Pulleys 142
9.2.2 V-belt Pulleys 145
9.2.3 Rope Pulley 147

10 Riveted Joints 150

10.1 Introduction 150

www.EngineeringBooksPdf.com

10.2 Rivets and Riveting 150
10.2.1 Rivet 150
10.2.2 Riveting 150
10.2.3 Caulking and Fullering 151
10.3 Rivet Heads 151
10.4 Definitions 151
10.4.1 Pitch 151
10.4.2 Margin 152
10.4.3 Chain Riveting 152
10.4.4 Zig-Zag Riveting 152
10.4.5 Row Pitch 152
10.4.6 Diagonal Pitch 152
10.5 Classification of Riveted Joints 152
10.5.1 Structural Joints 152
10.5.2 Boiler Joints 154

11 Welded Joints 161

11.1 Introduction 161
11.2 Welded Joints and Symbols 161
11.2.1 Position of the Weld Symbols on the Drawings 162
11.2.2 Conventional Signs 166
11.2.3 Location of Welds 166
11.2.4 Position of the Arrow Line 166
11.2.5 Position of the Reference Line 167
11.2.6 Position of the Symbol 167
11.3 Dimensioning of Welds 168
11.3.1 Dimensioning Fillet Welds 168
11.4 Edge Preparation of Welds 168
11.5 Surface Finish 169
11.6 Rules to be Observed while Applying Symbols 169
11.7 Welding Process Designations (Abbreviations) 171
11.8 Examples 171

12 Bearings 176

12.1 Introduction 176
12.2 Sliding Contact Bearings 176
12.2.1 Journal Bearings 176
12.3 Rolling Contact (Anti-friction) Bearings 183
12.3.1 Radial Bearings 184
12.3.2 Thrust Bearings 185

13 Chains and Gears 189

13.1 Introduction 189
13.2 Chain Drives 189
13.3 Roller Chains 189
13.4 Inverted Tooth or Silent Chains 190

www.EngineeringBooksPdf.com

13.5 Sprockets 190
13.6 Design of Roller Chain Drives 190
13.7 Gears 191
13.8 Types of Gears 191
13.9 Gear Nomenclature 191
13.10 Tooth Profiles 192
13.10.1 Involute Tooth Profile 192
13.10.2 Approximate Construction of Tooth Profiles 193
13.11 Gears and Gearing 195
13.11.1 Spur Gear 195
13.11.2 Spur Gearing 195
13.11.3 Helical Gear 196
13.11.4 Helical Gearing 196
13.11.5 Bevel Gear 196
13.11.6 Bevel Gearing 197
13.11.7 Worm and Worm Gear (Wheel) 197

14 Jigs and Fixtures 200

14.1 Introduction 200
14.2 Presentation of Work Piece 200
14.3 Jig Components 200
14.3.1 Jig Body 200
14.3.2 Locating Devices 201
14.3.3 Clamping Devices 201
14.3.4 Bushings 201
14.4 Various Types of Jigs 203
14.4.1 Channel Jig 203
14.4.2 Box Jig 204
14.5. Fixture Components 204
14.5.1 Fixture Base 204
14.5.2 Clamps 204
14.5.3 Set Blocks 205
14.6 Types of Fixtures 205
14.6.1 Indexing Type Milling Fixture 205
14.6.2 Turning Fixture 205
14.6.3 Welding Fixture 206

15 Limits, Tolerances, and Fits 208

15.1 Introduction 208
15.2 Limit System 208
15.2.1 Tolerance 208
15.2.2 Limits 208
15.2.3 Deviation 208
15.2.4 Actual Deviation 208
15.2.5 Upper Deviation 208
15.2.6 Lower Deviation 209
15.2.7 Allowance 209

www.EngineeringBooksPdf.com

15.2.8 Basic Size 209
15.2.9 Design Size 209
15.2.10 Actual Size 209
15.3 Tolerances 209
15.3.1 Fundamental Tolerances 212
15.3.2 Fundamental Deviations 212
15.3.3 Method of Placing Limit Dimensions (Tolerancing Individual Dimensions) 225
15.4 Fits 227
15.4.1 Clearance Fit 227
15.4.2 Transition Fit 227
15.4.3 Interference Fit 228
15.5 Tolerances of Form and Position 232
15.5.1 Introduction 232
15.5.2 Form Variation 232
15.5.3 Position Variation 232
15.5.4 Geometrical Tolerance 232
15.5.5 Tolerance Zone 232
15.5.6 Definitions 232
15.5.7 Indicating Geometrical Tolerances on the Drawing 234
15.5.8 Indication of Feature Controlled 234
15.5.9 Standards Followed in Industry 235

16 Surface Roughness 242

16.1 Introduction 242
16.2 Surface Roughness 242
16.2.1 Actual Profile, A_f 243
16.2.2 Reference Profile, R_f 243
16.2.3 Datum Profile, D_f 243
16.2.4 Mean Profile, M_f 243
16.2.5 Peak-to-valley Height, R_t 243
16.2.6 Mean Roughness Index, R_a 243
16.2.7 Surface Roughness Number 243
16.3 Machining Symbols 245
16.4 Indication of Surface Roughness 245
16.4.1 Indication of Special Surface Roughness Characteristics 246
16.4.2 Indication of Machining Allowance 248
16.4.3 Indications of Surface Roughness Symbols on Drawings 248

17 Blueprint Reading 251

17.1 Introduction 251
17.2 Examples 251
17.2.1 Rear Tool Post 251
17.2.2 Pump Housing 252
17.2.3 Gear Box Cover 254
17.2.4 Steam Stop Valve 254
17.3 Exercises 257
17.3.1 Worm Gear Housing 257

www.EngineeringBooksPdf.com

17.3.2 Connector 258
17.3.3 Square Tool Post 259
17.3.4 Milling Fixture 261

18 Assembly Drawings 264

18.1 Introduction 264
18.2 Engine Parts 265
18.2.1 Stuffing Box 265
18.2.2 Steam Engine Crosshead 265
18.2.3 Crosshead 265
18.2.4 Steam Engine Connecting Rod End 265
18.2.5 Marine Engine Connecting Rod End 267
18.2.6 Piston 270
18.2.7 Radial Engine Sub-assembly 271
18.2.8 Eccentric 273
18.2.9 Rotary Gear Pump 273
18.2.10 Air Valve 276
18.2.11 Fuel Injector 276
18.2.12 Single Plate Clutch 276
18.2.13 Multiplate Friction Clutch 279
18.3 Machine Tool Parts and Accessories 284
18.3.1 Single Tool Post 284
18.3.2 Square Tool Post 284
18.3.3 Clapper Block 285
18.3.4 Shaper Tool Head Slide 287
18.3.5 Lathe Tail-stock 289
18.3.6 Milling Machine Tail-stock 289
18.3.7 Revolving Centre 291
18.3.8 Floating Reamer Holder 294
18.3.9 Machine Vice 294
18.3.10 Swivel Machine Vice 294
18.3.11 Drill Jig 298
18.3.12 Indexing Drill Jig 299
18.3.13 Self-centring Chuck 299
18.3.14 Four Jaw Chuck 299
18.4 Valves and Boiler Mountings 303
18.4.1 Gate Valve 303
18.4.2 Screw Down Stop Valve 306
18.4.3 Non-return Valve (Light Duty) 306
18.4.4 Non-return Valve 306
18.4.5 Air Cock 310
18.4.6 Blow-off Cock 310
18.4.7 Feed Check Valve 310
18.4.8 Pressure Relief Valve 314
18.4.9 Lever Safety Valve 315
18.4.10 Spring Loaded Relief Valve 318
18.4.11 Ramsbottom Safety Valve 318
18.5 Miscellaneous Parts 321
18.5.1 Socket and Spigot Joint 321

www.EngineeringBooksPdf.com

18.5.2 Knuckle Joint 322
18.5.3 Protected Flanged Coupling 323
18.5.4 Bushed-pin Type Flanged Coupling 323
18.5.5 Oldham Coupling 324
18.5.6 Universal Coupling 326
18.5.7 Plummer Block 327
18.5.8 Swivel Bearing 329
18.5.9 Foot-step Bearing 329
18.5.10 C-clamp 331
18.5.11 Crane Hook 332
18.5.12 V-Belt Drive 334
18.5.13 Screw Jack 335
18.5.14 Pipe Vice 335
18.5.15 Speed Reducer 335

19 Part Drawings 355

19.1 Introduction 355
19.2 Engine Parts 356
19.2.1 Petrol Engine Connecting Rod 356
19.2.2 Marine Engine Connecting Rod End 357
19.2.3 Steam Engine Connecting Rod End 357
19.2.4 Spark Plug 357
19.2.5 Steam Engine Crosshead 357
19.2.6 Automobile Gear Box 362
19.2.7 Split-sheave Eccentric 366
19.3 Machine Tool Parts and Accessories 366
19.3.1 Tool Post 366
19.3.2 Lathe Slide Rest 366
19.3.3 Lathe Speed Gear Box 368
19.3.4 Milling Machine Tail Stock 370
19.3.5 Lathe Travelling Rest 370
19.3.6 Self-centering Vice 370
19.3.7 Milling Fixture 376
19.3.8 Indexing Drill Jig 376
19.3.9 Pierce and Blank Tool 376
19.4 Miscellaneous Parts 376
19.4.1 Blow-off Cock 376
19.4.2 Steam Stop Valve 381
19.4.3 Ramsbottom Safety Valve 381
19.4.4 Diaphragm Regulator 381
19.4.5 Angle Plummer Block 381
19.4.6 Castor Wheel 388
19.4.7 Speed Reducer 388

20 Production Drawings 389

20.1 Introduction 389
20.2 Types of Production Drawings 389
20.2.1 Detail or Part Drawings 389

www.EngineeringBooksPdf.com

20.2.2 Working Assembly Drawings 392
20.2.3 Detailed Drawings and Manufacturing Methods 392
20.3 Example 393
20.3.1 Petrol Engine Connecting Rod 393

21 Computer Aided Draughting 397

21.1 Introduction 397
21.2 Overview 397
21.3 Required Equipment 397
21.3.1 Computer 397
21.3.2 Terminal 398
21.3.3 Keyboard 398
21.3.4 Cathode Ray Tube (CRT) 398
21.3.5 Plotters 398
21.3.6 Printers 398
21.3.7 Digitizers 398
21.3.8 Locators and Selectors 398
21.4 Display Technology 398
21.4.1 Plotting the Drawings 399
21.5 Basics of Operating System 399
21.6 Starting AutoCAD 399
21.6.1 Invoking AutoCAD Commands 400
21.6.2 Interactive Techniques 400
21.7 Planning for a Drawing 402
21.7.1 Co-ordinate System 402
21.7.2 Basic Geometric Commands 403
21.7.3 Drawing Entity-POINT 403
21.7.4 Drawing Entity-LINE 404
21.7.5 Drawing Entity-ELLIPSE 405
21.7.6 Drawing Entity-POLYGON 405
21.7.7 Drawing Entity-RECTANGLE 406
21.7.8 Drawing Entity-CIRCLE 406
21.7.9 Drawing Entity–ARC 407
21.8 Object Selection 407
21.8.1 Edit Commands 408
21.8.2 Zoom Command 409
21.8.3 Cross-hatching and Pattern Filling 410
21.8.4 Utility Commands 410
21.9 Types of Modelling 411
21.9.1 2D Wire Frame 411
21.9.2 3D Wire Frame 411
21.9.3 Surface Modelling 411
21.9.4 Solid Modelling 411
21.10 View Point 412
21.10.1 V-point Co-ordinates View(s) Displayed 413
21.11 View Ports 413
21.12 Creation of 3D Primitives 414
21.12.1 To Draw a Cylinder 414

www.EngineeringBooksPdf.com

21.12.2 To Draw Cone 415
21.12.3 To Draw a Box 415
21.13 Creation of Composite Solids 415
21.13.1 To Create Regions 415
21.13.2 Solid Modelling 416
21.13.3 Mass Property 416
21.14 Sectional View 416
21.15 Isometric Drawing 417
21.15.1 Setting Isometric Grid and Snap 417
21.16 Basic Dimensioning 417
21.16.1 Dimensioning Fundamentals 418
21.16.2 Dimensioning Methods 418
21.16.3 Linear Dimensions 419
21.16.4 Continuing Linear Dimensions 419
21.16.5 Example for Dimensioning 420
21.17 Polyline (Pline) 421
21.18 Offset 422
21.19 Elevation and Thickness 423
21.20 Change Prop 424
21.21 Extrusion 424

Objective Questions **428**

Answers **440**

Annexure **442**

Index **449**

www.EngineeringBooksPdf.com

This page intentionally left blank

www.EngineeringBooksPdf.com

INTRODUCTION 1

1.1 GRAPHIC LANGUAGE

1.1.1 General

A technical person can use the graphic language as powerful means of communication with others for conveying ideas on technical matters. However, for effective exchange of ideas with others, the engineer must have proficiency in (*i*) language, both written and oral, (*ii*) symbols associated with basic sciences and (*iii*) the graphic language. Engineering drawing is a suitable graphic language from which any trained person can visualise the required object. As an engineering drawing displays the exact picture of an object, it obviously conveys the same ideas to every trained eye.

Irrespective of language barriers, the drawings can be effectively used in other countries, in addition to the country where they are prepared. Thus, the engineering drawing is the universal language of all engineers.

Engineering drawing has its origin sometime in 500 BC in the regime of King Pharos of Egypt when symbols were used to convey the ideas among people.

1.1.2 Importance of Graphic Language

The graphic language had its existence when it became necessary to build new structures and create new machines or the like, in addition to representing the existing ones. In the absence of graphic language, the ideas on technical matters have to be conveyed by speech or writing, both are unreliable and difficult to understand by the shop floor people for manufacturing. This method involves not only lot of time and labour, but also manufacturing errors. Without engineering drawing, it would have been impossible to produce objects such as aircrafts, automobiles, locomotives, etc., each requiring thousands of different components.

1.1.3 Need for Correct Drawings

The drawings prepared by any technical person must be clear, unmistakable in meaning and there should not be any scope for more than one interpretation, or else litigation may arise. In a number of dealings with contracts, the drawing is an official document and the success or failure of a structure depends on the clarity of details provided on the drawing. Thus, the drawings should not give any scope for mis-interpretation even by accident.

It would not have been possible to produce the machines/automobiles on a mass scale where a number of assemblies and sub-assemblies are involved, without clear, correct and accurate drawings. To achieve this, the technical person must gain a thorough knowledge of both the principles and conventional practice of draughting. If these are not achieved and or practiced, the drawings prepared by one may convey different meaning to others, causing unnecessary delays and expenses in production shops.

www.EngineeringBooksPdf.com

Hence, an engineer should posses good knowledge, not only in preparing a correct drawing but also to read the drawing correctly. The course content of this book is expected to meet these requirements.

The study of machine drawing mainly involves learning to sketch machine parts and to make working and assembly drawings. This involves a study of those conventions in drawings that are widely adopted in engineering practice.

1.2 CLASSIFICATION OF DRAWINGS

1.2.1 Machine Drawing

It is pertaining to machine parts or components. It is presented through a number of orthographic views, so that the size and shape of the component is fully understood. Part drawings and assembly drawings belong to this classification. An example of a machine drawing is given in Fig. 1.1.

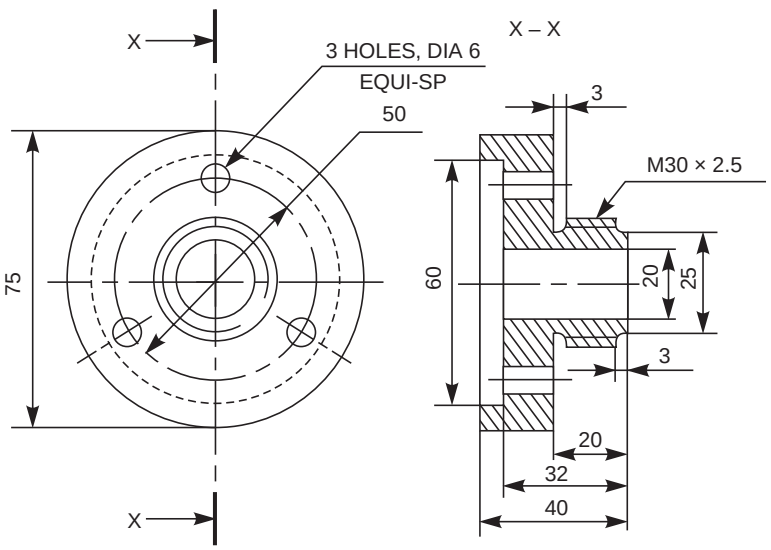

Fig. 1.1 Machine drawing

1.2.2 Production Drawing

A production drawing, also referred to as working drawing, should furnish all the dimensions, limits and special finishing processes such as heat treatment, honing, lapping, surface finish, etc., to guide the craftsman on the shop floor in producing the component. The title should also mention the material used for the product, number of parts required for the assembled unit, etc.

Since a craftsman will ordinarily make one component at a time, it is advisable to prepare the production drawing of each component on a separate sheet. However, in some cases the drawings of related components may be given on the same sheet. Figure 1.2 represents an example of a production drawing.

1.2.3 Part Drawing

Component or part drawing is a detailed drawing of a component to facilitate its manufacture. All the principles of orthographic projection and the technique of graphic representation must be followed to communicate the details in a part drawing. A part drawing with production details is rightly called as a production drawing or working drawing.

www.EngineeringBooksPdf.com

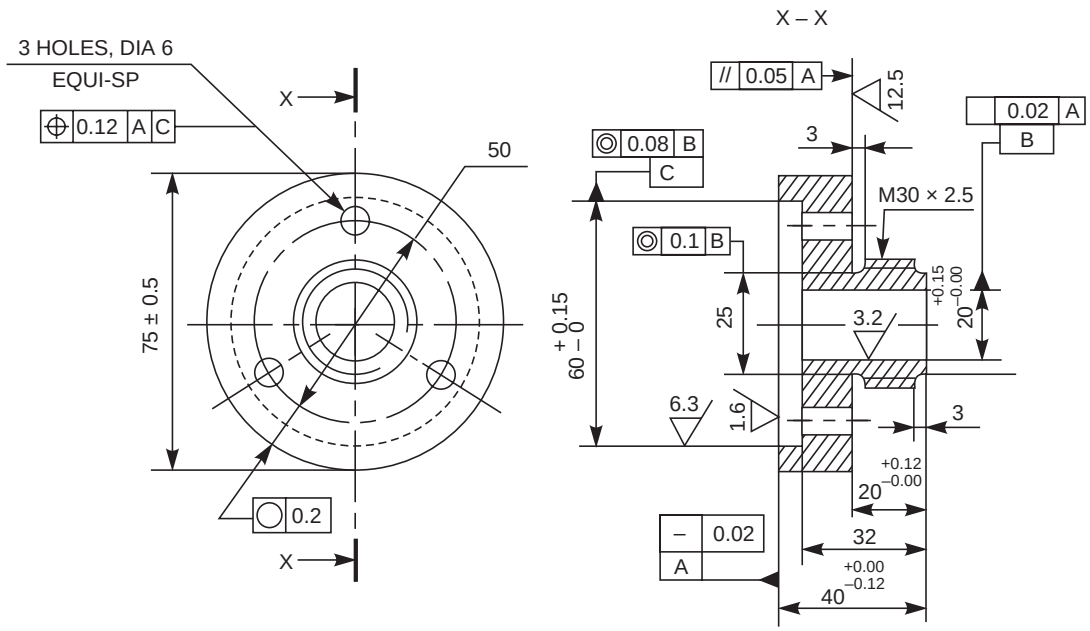

Fig. 1.2 Production drawing

1.2.4 Assembly Drawing

A drawing that shows the various parts of a machine in their correct working locations is an assembly drawing (Fig. 1.3). There are several types of such drawings.

1.2.4.1 Design Assembly Drawing

When a machine is designed, an assembly drawing or a design layout is first drawn to clearly visualise the performance, shape and clearances of various parts comprising the machine.

1.2.4.2 Detailed Assembly Drawing

It is usually made for simple machines, comprising of a relatively smaller number of simple parts. All the dimensions and information necessary for the construction of such parts and for the assembly of the parts are given directly on the assembly drawing. Separate views of specific parts in enlargements, showing the fitting of parts together, may also be drawn in addition to the regular assembly drawing.

1.2.4.3 Sub-assembly Drawing

Many assemblies such as an automobile, lathe, etc., are assembled with many pre-assembled components as well as individual parts. These pre-assembled units are known as sub-assemblies.

A sub-assembly drawing is an assembly drawing of a group of related parts, that form a part in a more complicated machine. Examples of such drawings are: lathe tail-stock, diesel engine fuel pump, carburettor, etc.

www.EngineeringBooksPdf.com

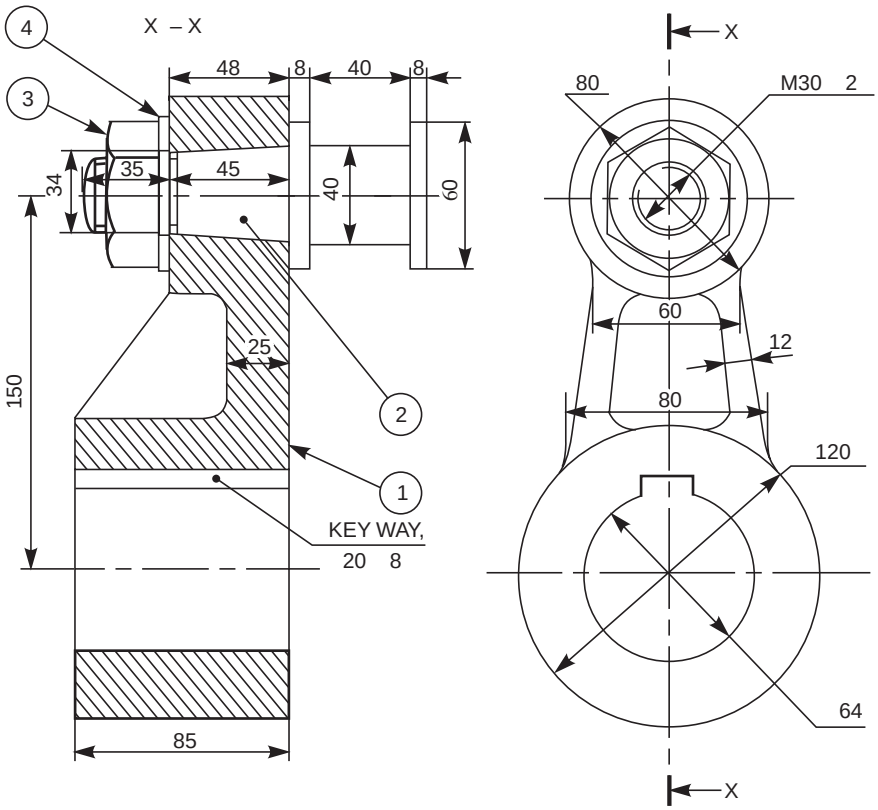

Parts List

Part No.	Name	Material	Qty
1	Crank	Forged Steel	1
2	Crank Pin	45C	1
3	Nut	MS	1
4	Washer	MS	1

Fig. 1.3 Assembly drawing

1.2.4.4 Installation Assembly Drawing

On this drawing, the location and dimensions of few important parts and overall dimensions of the assembled unit are indicated. This drawing provides useful information for assembling the machine, as this drawing reveals all parts of a machine in their correct working position.

1.2.4.5 Assembly Drawings for Catalogues

Special assembly drawings are prepared for company catalogues. These drawings show only the pertinent details and dimensions that would interest the potential buyer. Figure 1.4 shows a typical catalogue drawing, showing the overall and principal dimensions.

1.2.4.6 Assembly Drawings for Instruction Manuals

These drawings in the form of assembly drawings, are to be used when a machine, shipped away in assembled condition, is knocked down in order to check all the parts before reassembly

www.EngineeringBooksPdf.com

and installation elsewhere. These drawings have each component numbered on the job. Figure 1.5 shows a typical example of such a drawing.

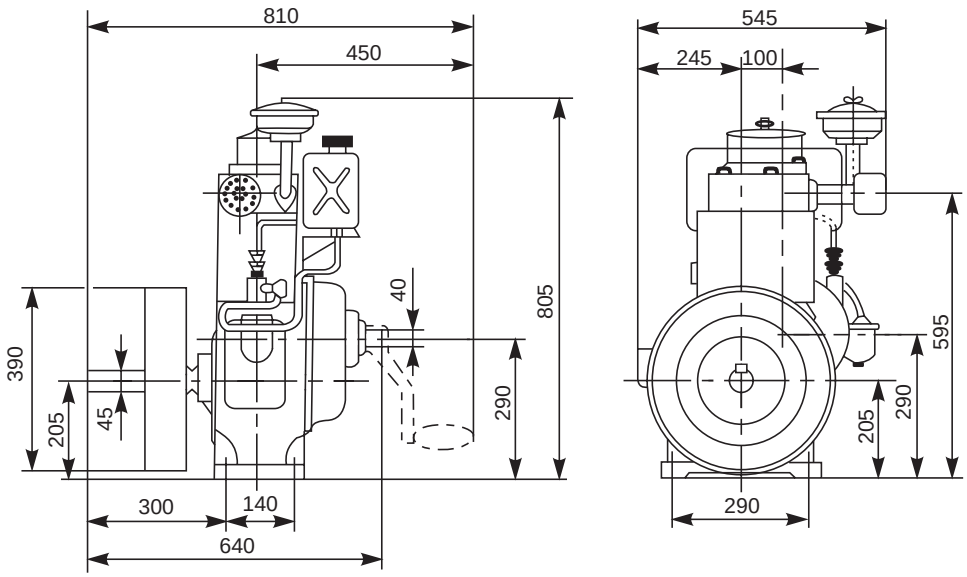

Fig. 1.4 Catalogue drawing

1.2.4.7 Exploded Assembly Drawing

In some cases, exploded pictorial views are supplied to meet instruction manual requirements. These drawings generally find a place in the parts list section of a company instruction manual. Figure 1.6 shows drawings of this type which may be easily understood even by those with less experience in the reading of drawings; because in these exploded views, the parts are positioned in the sequence of assembly, but separated from each other.

1.2.4.8 Schematic Assembly Drawing

It is very difficult to understand the operating principles of complicated machinery, merely from the assembly drawings. Schematic representation of the unit facilitates easy understanding of its operating principle. It is a simplified illustration of the machine or of a system, replacing all the elements, by their respective conventional representations. Figure 1.7 shows the schematic representation of a gearing diagram.

1.2.4.9 Machine Shop Drawing

Rough castings and forgings are sent to the machine shop for finishing operation (Fig. 1.8). Since the machinist is not interested in the dimensions and information of the previous stages, a machine shop drawing frequently gives only the information necessary for machining. Based on the same principle, one may have forge shop drawing, pattern shop drawing, sheet metal drawing, etc.

www.EngineeringBooksPdf.com

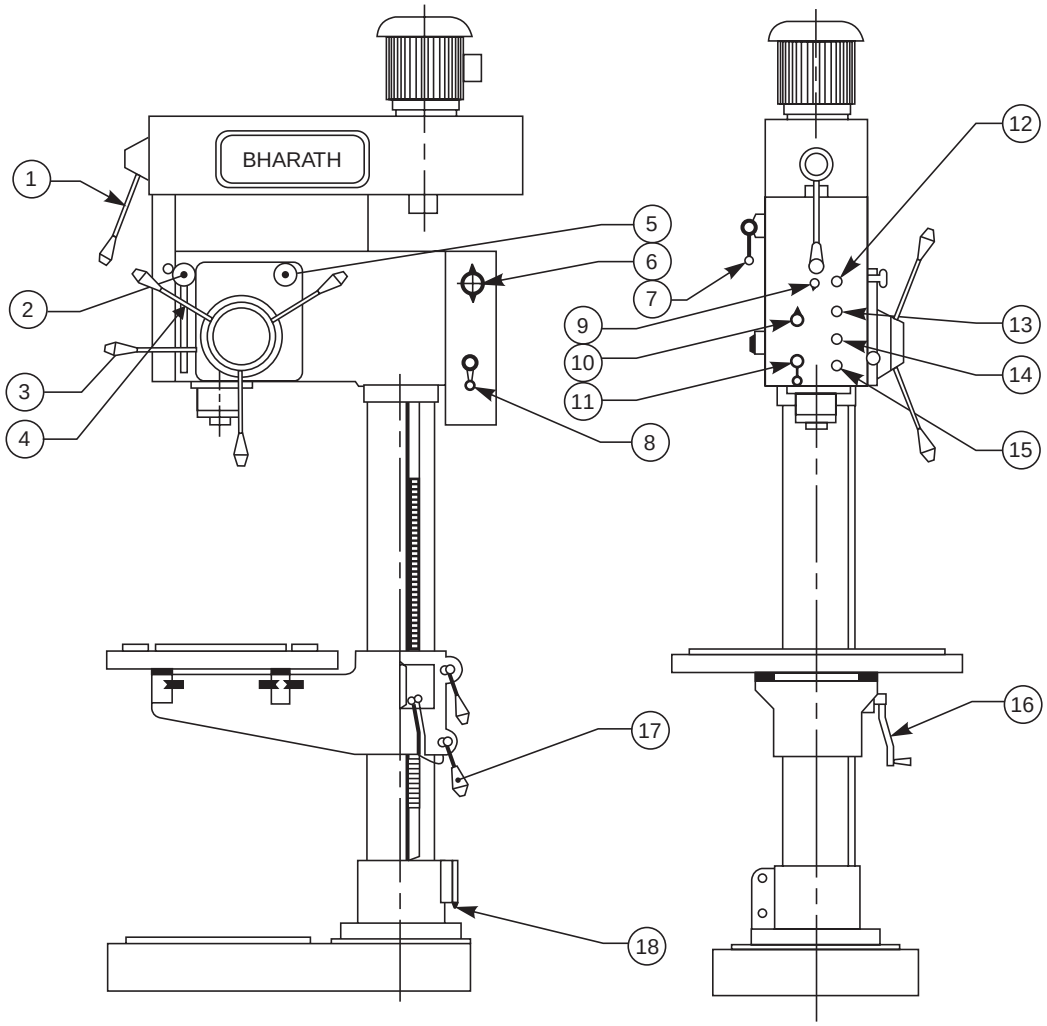

Speed change lever (1)
Depth adjusting knob (2)
Mech. feed engagement lever (3)
Hand feed lever (4)
Feed change knob (5)
Switch for tapping (6)
Gear shifting lever (7)
Main switch (8)
Lamp switch (9)
Selector switch (10)
Forward/reverse switch (11)
Pilot lamp (12)
Feed disengagement push button (13)
Start push button (14)
Emergency stop (15)
Elevating handle (16)
Clamping handle (17)
Supply inlet (18)

Fig. 1.5 Assembly drawing for instruction manuals

www.EngineeringBooksPdf.com

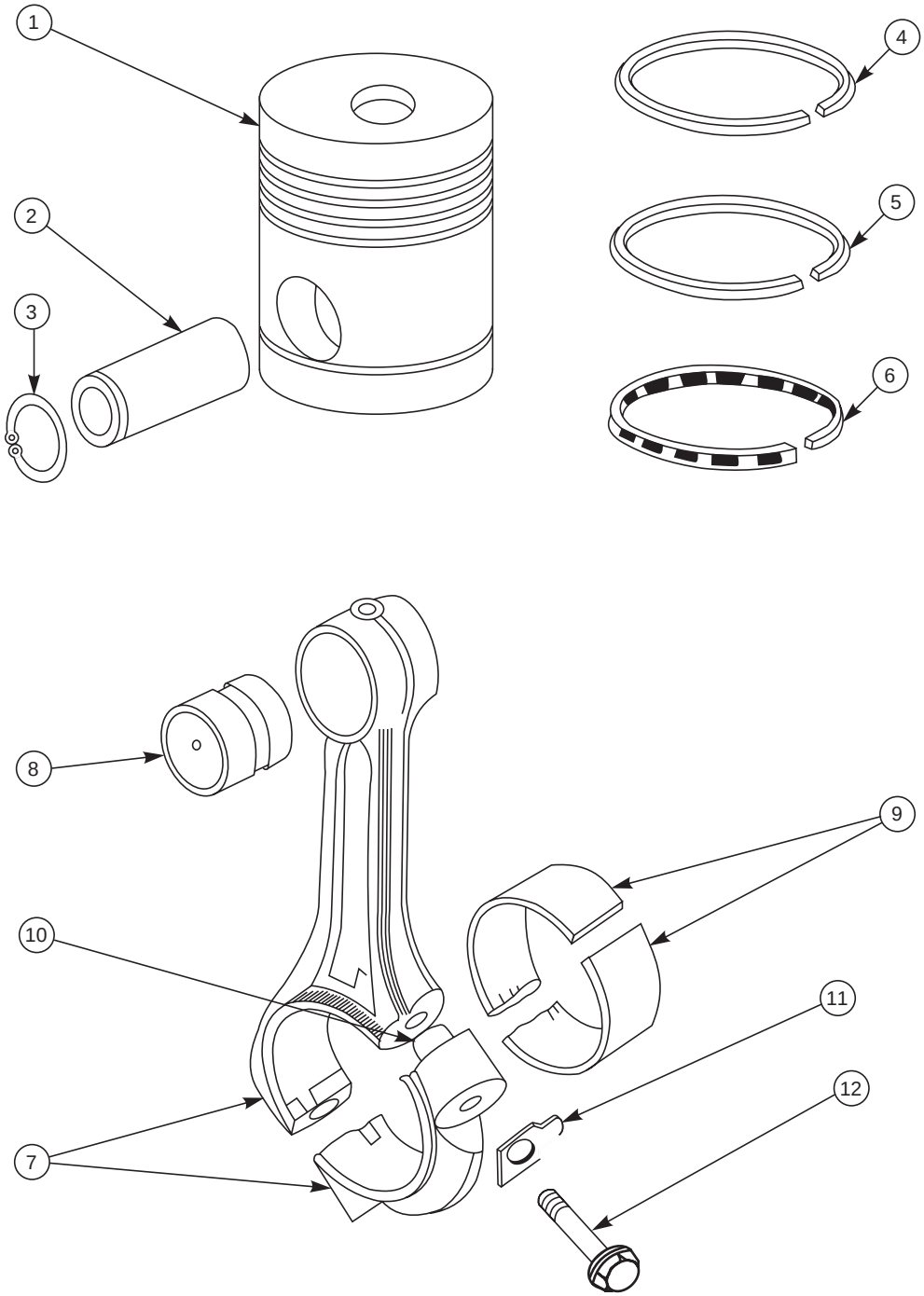

Fig. 1.6 Exploded assembly drawing

www.EngineeringBooksPdf.com

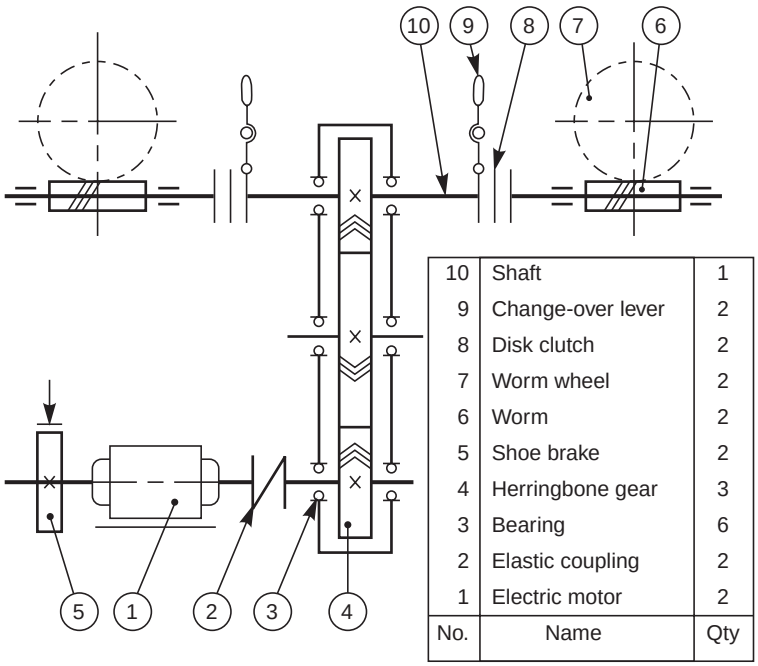

No.	Name	Qty
10	Shaft	1
9	Change-over lever	2
8	Disk clutch	2
7	Worm wheel	2
6	Worm	2
5	Shoe brake	2
4	Herringbone gear	3
3	Bearing	6
2	Elastic coupling	2
1	Electric motor	2

Fig. 1.7 Schematic assembly drawing

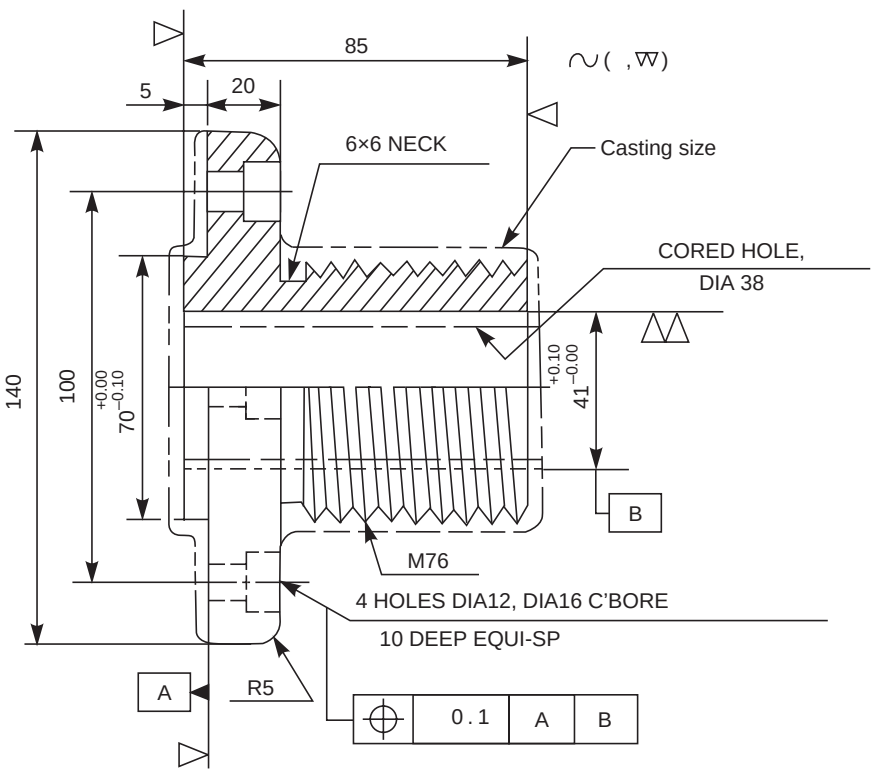

Fig. 1.8 Machine shop drawing

www.EngineeringBooksPdf.com

1.2.4.10 Patent Drawing

When new machines or devices are invented, patent drawings come into existence, to illustrate and explain the invention. These are pictorial drawings and must be self-explanatory. It is essential that the patent drawings are mechanically correct and include complete illustrations of every detail of the invention. However, they are not useful for production purposes. The salient features on the drawing are numbered for identification and complete description.

THEORY QUESTIONS

1.1 Classify the various types of drawings used in mechanical engineering field.
1.2 Explain the term "Machine drawing".
1.3 Define the term "Production drawing".
1.4 Differentiate between machine drawing and production drawing.
1.5 What is an assembly drawing ?
1.6 List out the various types of assembly drawings.
1.7 What is meant by a detailed assembly drawing ?
1.8 What is a sub-assembly drawing ?
1.9 What is an exploded assembly drawing and where is it used ?
1.10 Distinguish between the drawings for catalogues and instruction manuals.
1.11 What is meant by a schematic assembly drawing and when is it preferred ?
1.12 What is a machine shop drawing and how is it different from machine drawing ?
1.13 What are patent drawings and how are they prepared ?

www.EngineeringBooksPdf.com

PRINCIPLES OF DRAWING* 2

2.1 INTRODUCTION

Engineering drawings are to be prepared on standard size drawing sheets. The correct shape and size of the object can be visualised from the understanding of not only the views of it but also from the various types of lines used, dimensions, notes, scale, etc. To provide the correct information about the drawings to all the people concerned, the drawings must be prepared, following certain standard practices, as recommended by Bureau of Indian Standards (BIS).

2.2 DRAWING SHEET

Engineering drawings are prepared on drawing sheets of standard sizes. The use of standard size sheet, saves paper and facilitates convenient storage of drawings.

2.2.1 Sheet Sizes

The basic principles involved in arriving at the sizes of drawing sheets are:

$$(a)\ X : Y = 1 : \sqrt{2},\ (b)\ XY = 1$$

where X and Y are the sides of the sheet. For a reference size A0 (Table 2.1) having a surface area of 1 m^2, X = 841 mm and Y = 1189 mm. The successive format sizes are obtained either by halving along the length or doubling along the width, the areas being in the ratio 1:2 (Fig. 2.1).

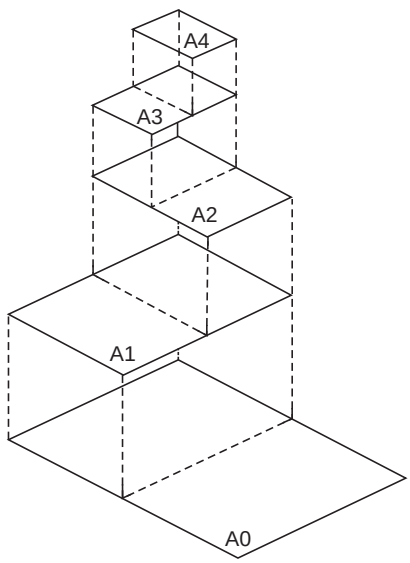

Fig. 2.1 Drawing sheet formats

2.2.2 Designation of Sizes

The original drawing should be made on the smallest sheet, permitting the necessary clarity and resolution. The preferred sizes according to ISO-A series (First choice) of the drawing sheets are given in Table 2.1. When sheets of greater length are needed, special elongated sizes (Second choice) are used (Table 2.2). These sizes are obtained by extending the shorter sides of format of the ISO-A series to lengths that are multiples of the shorter sides of the chosen basic format.

*Material for this chapter has been taken from BIS; SP–46: 1988.

www.EngineeringBooksPdf.com

Table 2.1 Preferred drawing sheet sizes (First choice) ISO-A Series

Designation	*Dimensions* (mm)
A0	841 × 1189
A1	594 × 841
A2	420 × 594
A3	297 × 420
A4	210 × 297

Table 2.2 Special elongated sizes (Second choice)

Designation	*Dimensions* (mm)
A3 × 3	420 × 891
A3 × 4	420 × 1188
A4 × 3	297 × 630
A4 × 4	297 × 840
A4 × 5	297 × 1050

2.2.3 Title Block

The title block should lie within the drawing space such that, the location of it, containing the identification of the drawing, is at the bottom right hand corner. This must be followed, both for sheets positioned horizontally or vertically (Fig. 2.2).

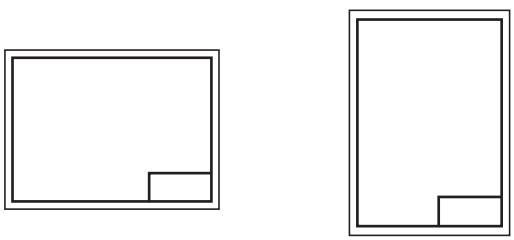

Fig. 2.2 Location of title block

The direction of viewing of the title block should correspond in general with that of the drawing. The title block can have a maximum length of 170 mm. Figure 2.3 shows a typical title block, providing the following information:

(*i*) Title of the drawing
(*ii*) Sheet number
(*iii*) Scale
(*iv*) Symbol, denoting the method of projection
(*v*) Name of the firm
(*vi*) Initials of staff drawn, checked and approved.

NOTE According to Bureau of Indian Standards, SP-46:1998, "Engineering Drawing Practice for Schools and Colleges", First angle projection is preferred.

2.2.4 Borders and Frames

Borders enclosed by the edges of the trimmed sheet and the frame, limiting the drawing space, should be provided with all sheet sizes. It is recommended that these borders have a minimum width of 20 mm for the sizes A0 and A1 and a minimum width of 10 mm for the sizes A2, A3 and A4 (Fig. 2.4). A filing margin for taking perforations, may be provided on the edge, far left of the title block.

www.EngineeringBooksPdf.com

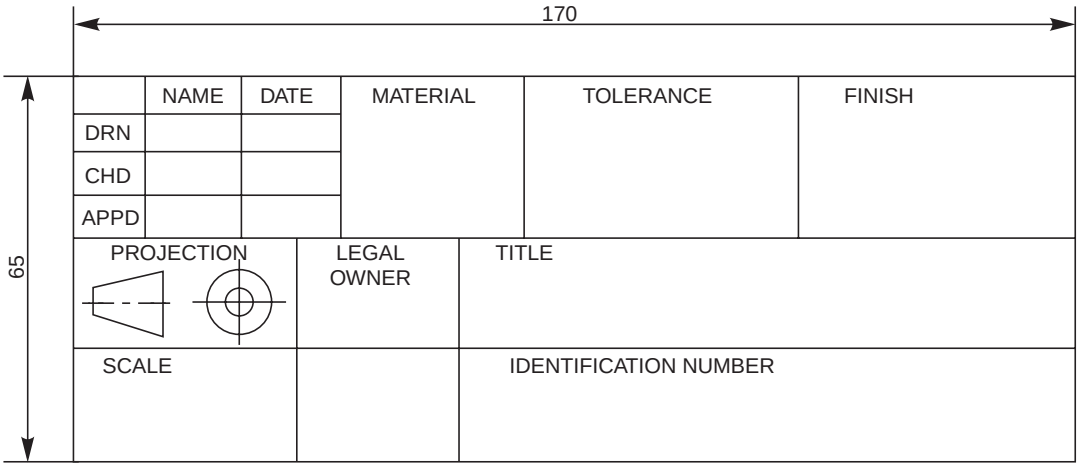

Fig. 2.3 Details in title block

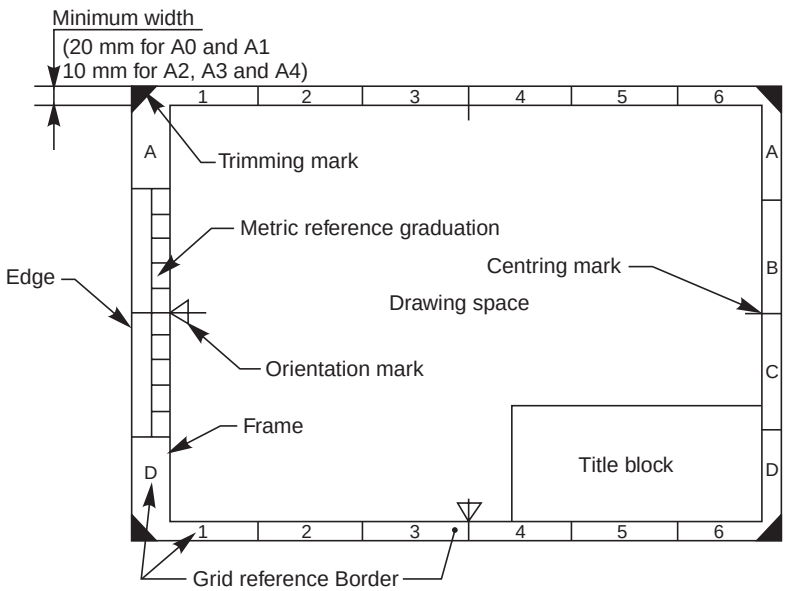

Fig. 2.4 Drawing sheet layout

2.2.5 Centring Marks

Four centring marks may be provided, in order to facilitate positioning of the drawing when reproduced or microfilmed. Two orientation marks may be provided to indicate the orientation of the drawing sheet on the drawing board (Fig. 2.4).

2.2.6 Metric Reference Graduation

It is recommended to provide a figure-less metric reference graduation, with a minimum length of 100 mm and divided into 10 intervals on all the drawing sheets (Fig. 2.4) which are intended to be microfilmed. The metric reference graduation may be disposed symmetrically about a centring mark, near the frame at the border, with a minimum width of 5 mm.

www.EngineeringBooksPdf.com

2.2.7 Grid Reference System (Zoning)

The provision of a grid reference system is recommended for all the sizes, in order to permit easy location on the drawing of details, additions, modifications, etc. The number of divisions should be divisible by two and be chosen in relation to the complexity of the drawing. It is recommended that the length of any side of the grid should not be less than 25 mm and not more than 75 mm. The rectangles of the grid should be referenced by means of capital letters along one edge and numerals along the other edge, as shown in Fig. 2.4. The numbering direction may start at the sheet corner opposite to the title block and be repeated on the opposite sides.

2.2.8 Trimming Marks

Trimming marks may be provided in the borders at the four corners of the sheet, in order to facilitate trimming. These marks may be in the form of right angled isosceles triangles or two short strokes at each corner (Fig. 2.4).

2.3 SCALES

Scale is the ratio of the linear dimension of an element of an object as represented in the drawing, to the real linear dimension of the same element of the object itself. Wherever possible, it is desirable to make full size drawings, so as to represent true shapes and sizes. If this is not practicable, the largest possible scale should be used. While drawing very small objects, such as watch components and other similar objects, it is advisable to use enlarging scales.

2.3.1 Designation

The complete designation of a scale should consist of the word Scale, followed by the indication of its ratio as:

SCALE 1 : 1 for full size,

SCALE × : 1 for enlarged scales,

SCALE 1 : × for reduced scales.

The designation of the scale used on the drawing should be shown in the title block.

2.3.2 Recommended Scales

The recommended scales for use on technical drawings are given in Table 2.3. The scale and the size of the object in turn, will decide the size of the drawing.

Table 2.3 Recommended scales

Category	*Recommended Scales*		
Enlarged scales	50:1	20:1	10:1
	5:1	2:1	
Full size			1:1
Reduced scales	1:2	1:5	1:10
	1:20	1:50	1:100
	1:200	1:500	1:1000
	1:2000	1:5000	1:10000

2.3.3 Scale Specification

If all drawings are made to the same scale, the scale should be indicated in or near the title block. Where it is necessary to use more than one scale on a drawing, the main scale only should be shown in the title block and all the other scales, adjacent to the item reference number of the part concerned or near the drawings.

www.EngineeringBooksPdf.com

2.4 LINES

Lines of different types and thicknesses are used for graphical representation of objects. The types of lines and their applications are shown in Table 2.4. Typical applications of different types of lines are shown in Figs. 2.5 and 2.6.

Table 2.4 Types of lines and their applications

Line	*Description*	*General Applications*
A	Continuous thick	A1 Visible outlines
B	Continuous thin (straight or curved)	B1 Imaginary lines of intersection B2 Dimension lines B3 Projection lines B4 Leader lines B5 Hatching lines B6 Outlines of revolved sections in place B7 Short centre lines
C	Continuous thin, free-hand	C1 Limits of partial or interrupted views and sections, if the limit is not a chain thin
D	Continuous thin (straight) with zigzags	D1 Line (see Fig. 2.5)
E	Dashed thick	E1 Hidden outlines
G	Chain thin	G1 Centre lines G2 Lines of symmetry G3 Trajectories
H	Chain thin, thick at ends and changes of direction	H1 Cutting planes
J	Chain thick	J1 Indication of lines or surfaces to which a special requirement applies
K	Chain thin, double-dashed	K1 Outlines of adjacent parts K2 Alternative and extreme positions of movable parts K3 Centroidal lines

www.EngineeringBooksPdf.com

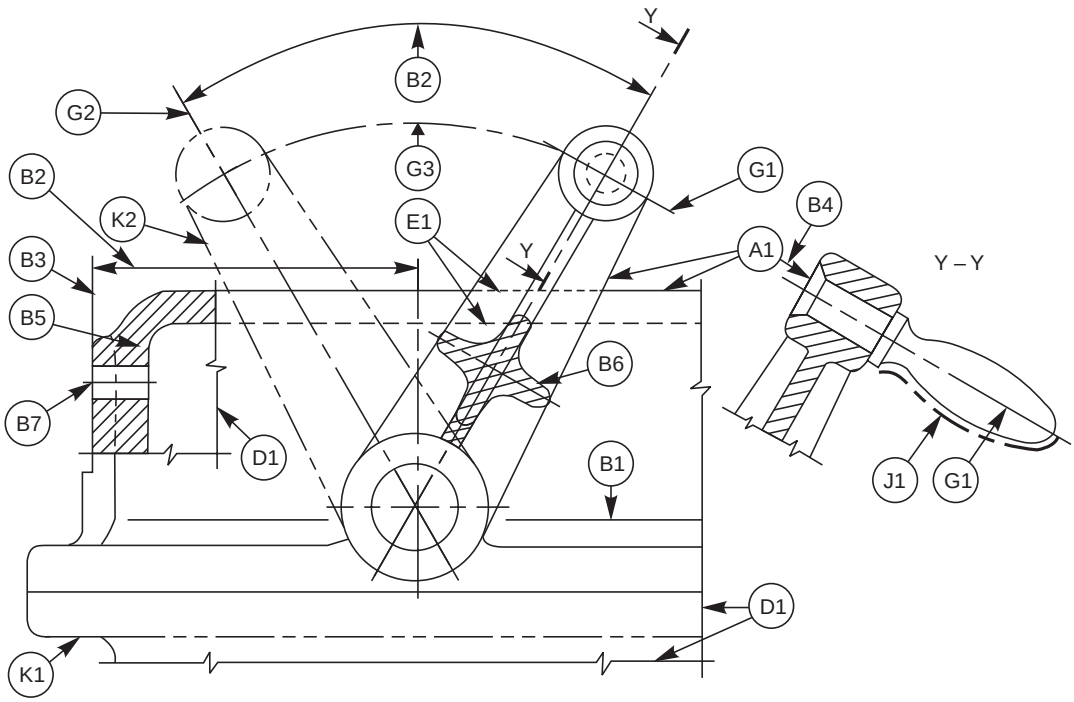

Fig. 2.5 Applications of lines

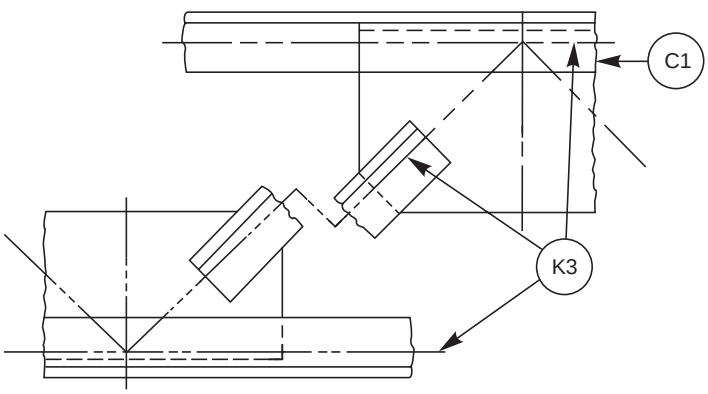

Fig. 2.6 Applications of lines

2.4.1 Thickness of Lines

Two thicknesses of lines are used in draughting practice. The ratio of the thick to thin line should not be less than 2:1. The thickness of lines should be chosen according to the size and type of the drawing from the following range:

0.18, 0.25, 0.35, 0.5, 0.7, 1, 1.4 and 2

It is recommended that the space between two parallel lines, including hatching, should never be less than 0.7 mm.

www.EngineeringBooksPdf.com

2.4.2 Order of Priority of Coinciding Lines

When two or more lines of different types coincide, the following order of priority should be observed:

(*i*) Visible outlines and edges (Continuous thick lines, type A),

(*ii*) Hidden outlines and edges (Dashed line, type E or F),

(*iii*) Cutting planes (Chain thin, thick at ends and changes of cutting planes, type H),

(*iv*) Centre lines and lines of symmetry (Chain thin line, type G),

(*v*) Centroidal lines (Chain thin double dashed line, type K),

(*vi*) Projection lines (Continuous thin line, type B).

The invisible line technique and aixs representation should be followed as per the recommendations given in Table 2.5.

Table 2.5A Invisible lines

Instructions	*Correct*	*Incorrect*
Begin with a dash, not with a space		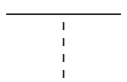
Dashes intersect without a gap between them	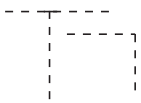	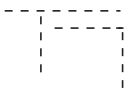
Three dashes meet at the intersection point		
As a continuation of a visible line/arc, begin with space	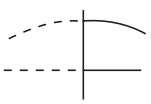	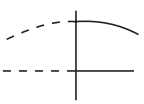
Invisible arcs begin with a dash	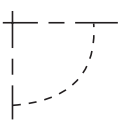	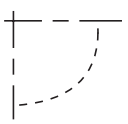
Small arcs may be made solid	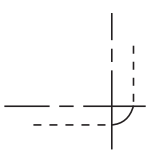	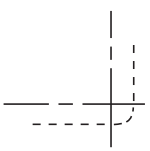
Two arcs meet at the point of tangency	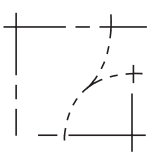	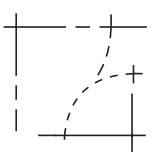

www.EngineeringBooksPdf.com

Table 2.5B Axis lines

Instructions	*Correct*	*Incorrect*
Axis line starts and ends with a longer dash		
Two axes intersect with longer dashes	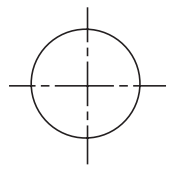	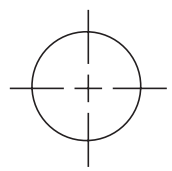
	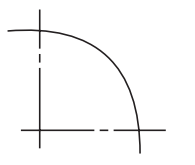	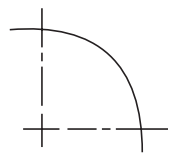
Axis extends the boundary with a longer dash	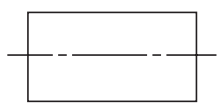	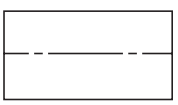

2.4.3 Termination of Leader Lines

A leader is a line referring to a feature (dimension, object, outline, etc.).

Leader lines should terminate (Fig. 2.7),

(*a*) with a dot, if they end within the outlines of an object,

(*b*) with an arrow head, if they end on the outline of an object,

(*c*) without dot or arrow head, if they end on a dimension line.

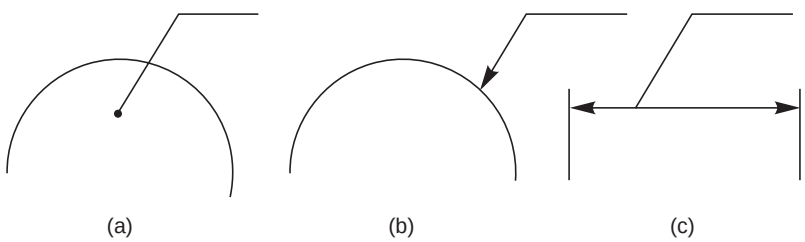

Fig. 2.7 Termination of leader lines

It is common practice to omit hidden lines in an assembled view, when their use tends to confuse an already complex drawing or when the feature is sufficiently clear in another view; but it is not advisable for a beginner to do the same and he will have to show the hidden lines in his drawing practice.

www.EngineeringBooksPdf.com

2.5 LETTERING

The essential features of lettering on technical drawings are, legibility, uniformity and suitability for microfilming and other photographic reproductions. In order to meet these requirements, the characters are to be clearly distinguishable from each other in order to avoid any confusion between them, even in the case of slight mutilations. The reproductions require the distance between two adjacent lines or the space between letters to be at least equal to twice the line thickness (Fig. 2.8). The line thickness for lower case and capital letters shall be the same in order to facilitate lettering.

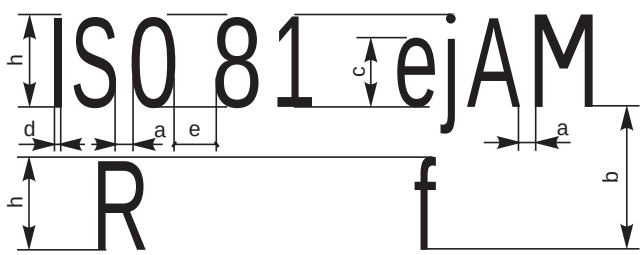

Fig. 2.8 Dimensions of lettering

2.5.1 Dimensions

The following specifications are given for the dimensions of letters and numerals:

(*i*) The height of capital letters is taken as the base of dimensioning (Tables 2.6 and 2.7).

(*ii*) The two standard ratios for d/h, 1/14 and 1/10 are the most economical, as they result in a minimum number of line thicknesses.

(*iii*) The lettering may be inclined at 15° to the right, or may be vertical.

Table 2.6 Lettering A ($d = h/14$)

Characteristic	*Ratio*		*Dimensions,* (mm)						
Lettering height (Height of capitals)	h	(14/14)h	2.5	3.5	5	7	10	14	20
Height of lower-case letters (without stem or tail)	c	(10/14)h	—	2.5	3.5	5	7	10	14
Spacing between characters	a	(2/14)h	0.35	0.5	0.7	1	1.4	2	2.8
Minimum spacing of base lines	b	(20/14)h	3.5	5	7	10	14	20	28
Minimum spacing between words	e	(6/14)h	1.05	1.5	2.1	3	4.2	6	8.4
Thickness of lines	d	(1/14)h	0.18	0.25	0.35	0.5	0.7	1	1.4

NOTE The spacing between two characters may be reduced by half, if this gives a better viusal effect as for example LA, TV; it then equals the line thickness.

www.EngineeringBooksPdf.com

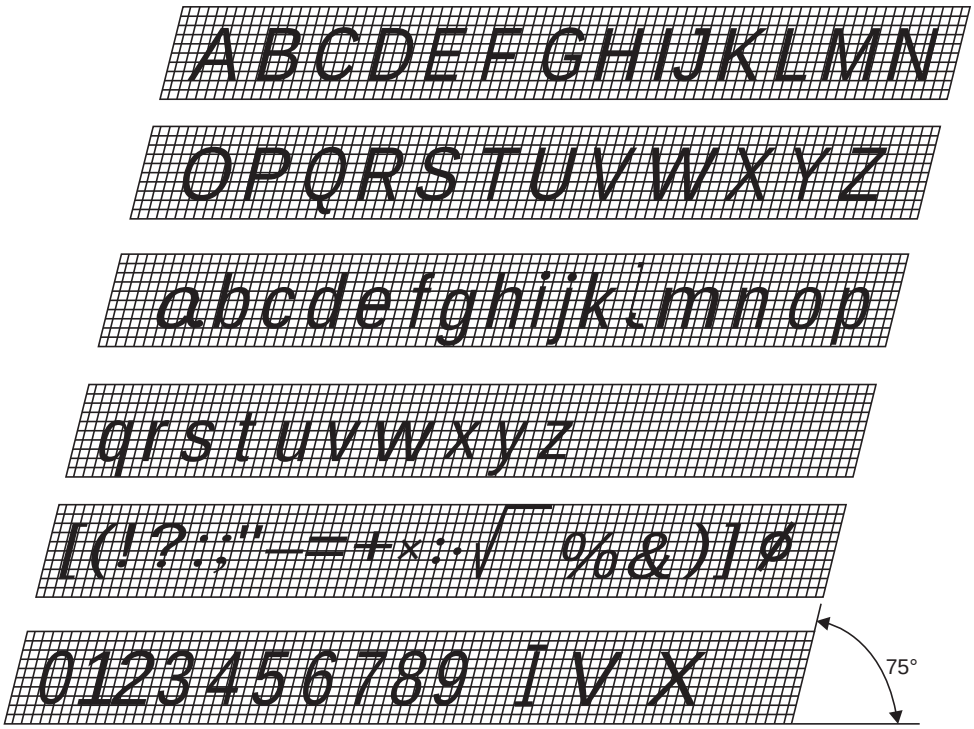

Fig. 2.9 Inclined lettering

Table 2.7 Lettering B ($d = h/10$)

Characteristic		*Ratio*	*Dimensions,* (mm)						
Lettering height (Height of capitals)	h	$(10/10)h$	2.5	3.5	5	7	10	14	20
Height of lower-case letters (without stem or tail)	c	$(7/10)h$	—	2.5	3.5	5	7	10	14
Spacing between characters	a	$(2/10)h$	0.5	0.7	1	1.4	2	2.8	4
Minimum spacing of base lines	b	$(14/10)h$	3.5	5	7	10	14	20	28
Minimum spacing between words	e	$(6/14)h$	1.5	2.1	3	4.2	6	8.4	12
Thickness of lines	d	$(1/10)h$	0.25	0.35	0.5	0.7	1	1.4	2

Figures 2.9 and 2.10 show the specimen letters of type A, inclined and vertical and are given only as a guide to illustrate the principles mentioned above.

2.6 SECTIONS

In order to show the inner details of a machine component, the object is imagined to be cut by a cutting plane and the section is viewed after the removal of cut portion. Sections are made by at cutting planes and are designated by capital letters and the direction of viewing is indicated by arrow marks.

www.EngineeringBooksPdf.com

Fig. 2.10 Vertical lettering

2.6.1 Hatching of Sections

Hatching is generally used to show areas of sections. The simplest form of hatching is generally adequate for the purpose, and may be continuous thin lines (type B) at a convenient angle, preferably 45°, to the principal outlines or lines of symmetry of the sections (Fig. 2.11).

Fig. 2.11 Preferred hatching angles

Separate areas of a section of the same component shall be hatched in an identical manner. The hatching of adjacent components shall be carried out with different directions or spacings (Fig 2.12 *a*). In case of large areas, the hatching may be limited to a zone, following the contour of the hatched area (Fig. 2.12 *b*).

Where sections of the same part in parallel planes are shown side by side, the hatching shall be identical, but may be off-set along the dividing line between the sections (Fig. 2.13). Hatching should be interrupted when it is not possible to place inscriptions outside the hatched area (Fig. 2.14).

www.EngineeringBooksPdf.com

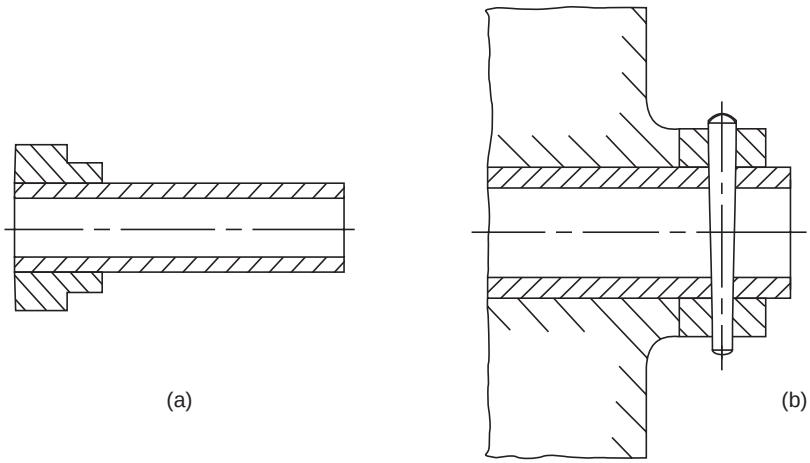

Fig. 2.12 Hatching of adjacent components

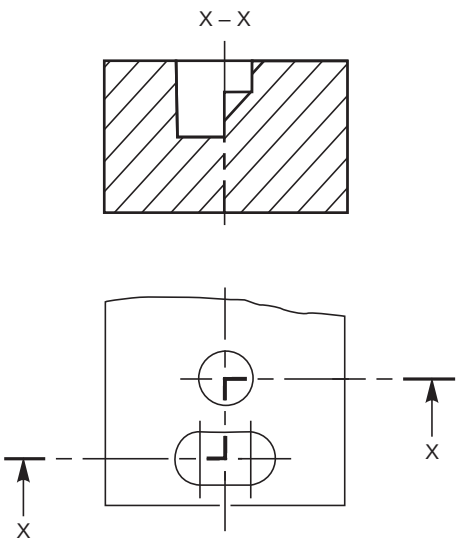

Fig. 2.13 Sectioning along two parallel planes

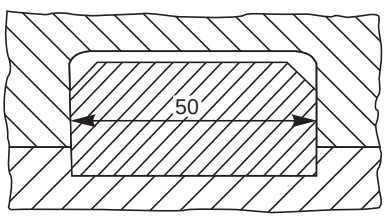

Fig. 2.14 Hatching interrupted for dimensioning

2.6.2 Cutting Planes

The cutting plane(s) should be indicated by means of type H line. The cutting plane should be identified by capital letters and the direction of viewing should be indicated by arrows. The section should be indicated by the relevant designation (Fig. 2.15).

In principle, ribs, fasteners, shafts, spokes of wheels and the like are not cut in longitudinal sections and therefore should not be hatched (Fig. 2.16).

Figure 2.17 represents sectioning in two parallel planes and Fig. 2.18, that of sectioning in three continuous planes.

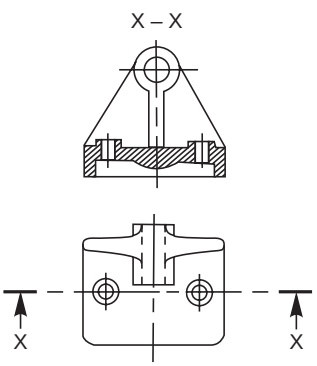

Fig. 2.15 Cutting plane indication

www.EngineeringBooksPdf.com

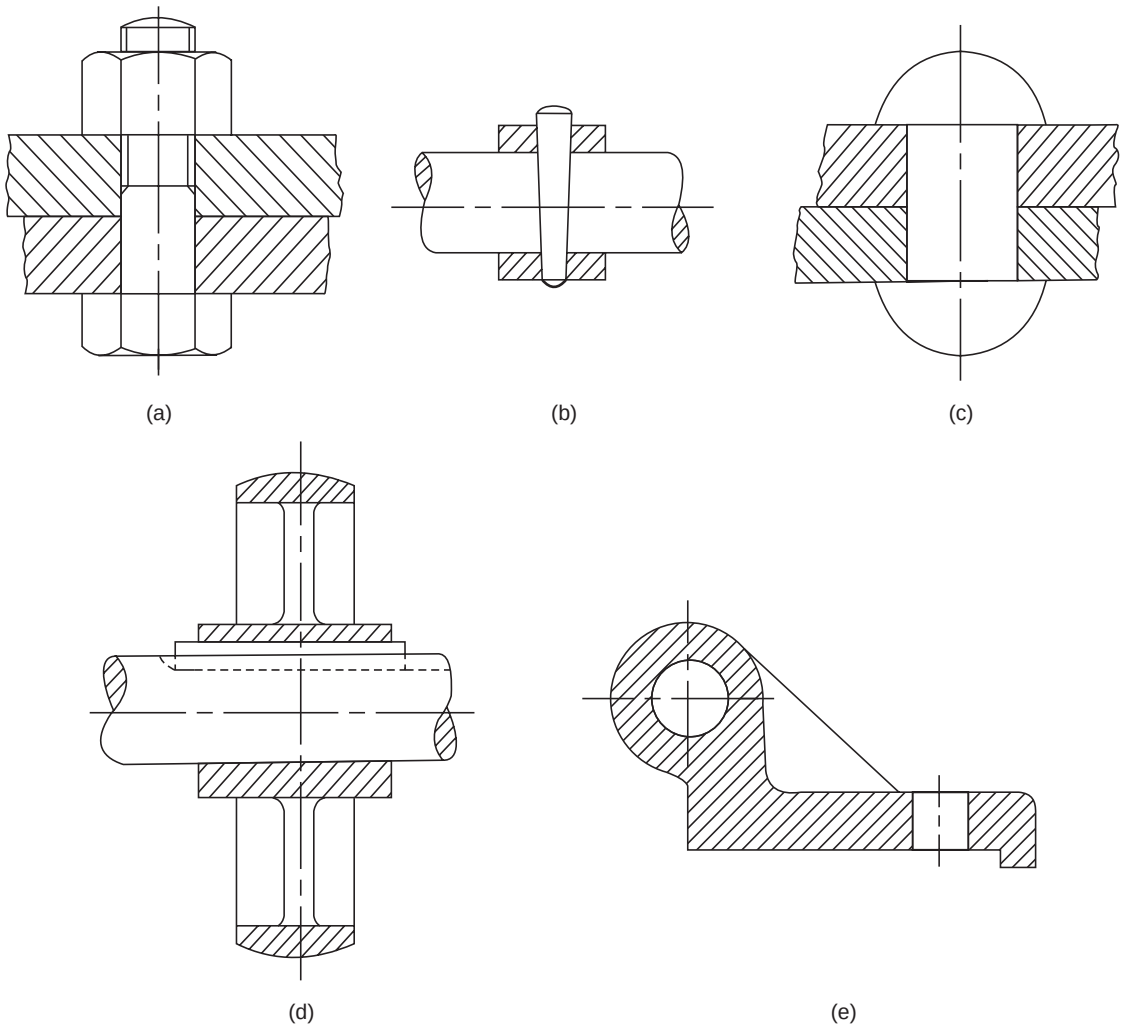

Fig. 2.16 Sections not to be hatched

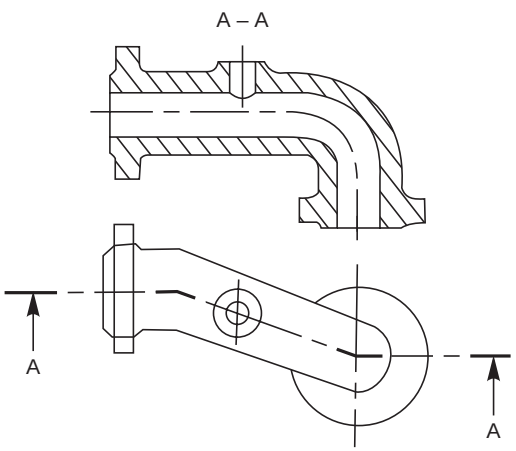

Fig. 2.17

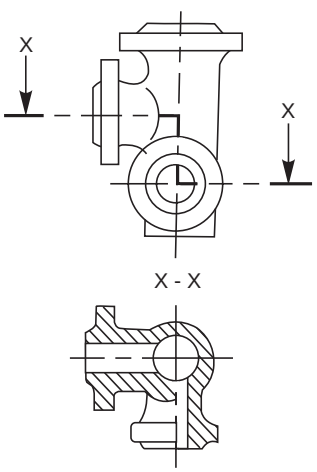

Fig. 2.18

www.EngineeringBooksPdf.com

Sectioning in two intersecting planes, in which one is shown revolved into plane of projection, as shown in Fig. 2.19.

In case of parts of revolution, containing regularly spaced details that require to be shown in section, but are not situated in the cutting plane; such details may be depicted by rotating them into the cutting plane (Fig. 2.20).

2.6.3 Revolved or Removed Section

Cross sections may be revolved in the relevant view or removed. When revolved in the relevant view, the outline of the section should be shown with continuous thin lines (Fig. 2.21). When removed, the outline of the section should be drawn with continuous thick lines. The removed section may be placed near to and connected with the view by a chain thin line (Fig. 2.22 *a*) or in a different position and identified in the conventional manner, as shown in Fig. 2.22 *b*.

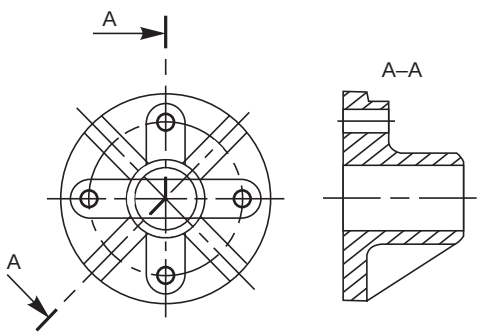

Fig. 2.19

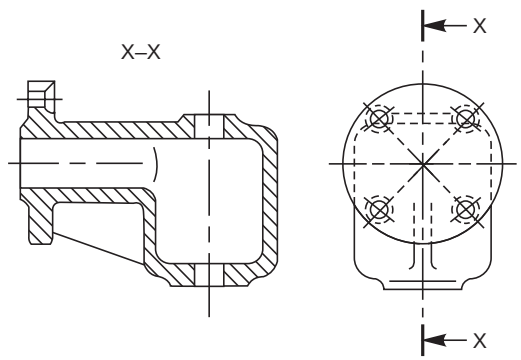

Fig. 2.20

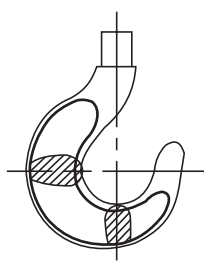

Fig. 2.21 Revolved section

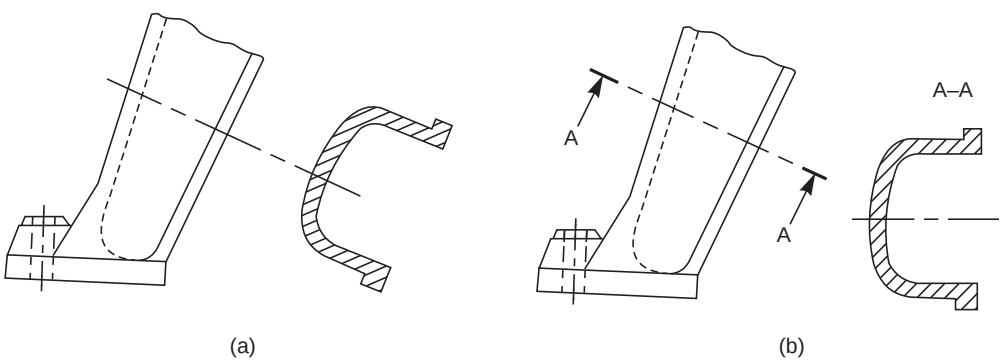

Fig. 2.22 Removed section

www.EngineeringBooksPdf.com

2.6.4 Half Section

Symmetrical parts may be drawn, half in plain view and half in section (Fig 2.23).

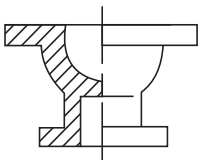

Fig. 2.23 Half section

2.6.5 Local Section

A local section may be drawn if half or full section is not convenient. The local break may be shown by a continuous thin free hand line (Fig. 2.24).

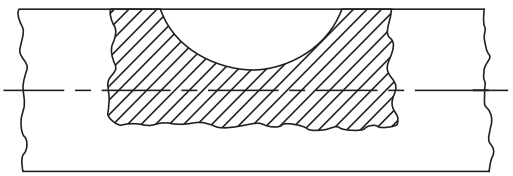

Fig. 2.24 Local section

2.6.6 Arrangement of Successive Sections

Successive sections may be placed separately, with designations for both cutting planes and sections (Fig. 2.25) or may be arranged below the cutting planes.

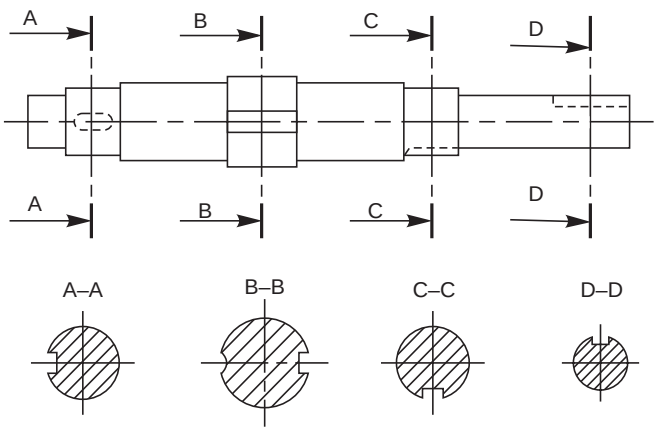

Fig. 2.25 Successive sections

2.7 CONVENTIONAL REPRESENTATION

Certain draughting conventions are used to represent materials in section and machine elements in engineering drawings.

2.7.1 Materials

As a variety of materials are used for machine components in engineering applications, it is preferable to have different conventions of section lining to differentiate between various materials. The recommended conventions in use are shown in Fig.2.26.

2.7.2 Machine Components

When the drawing of a component in its true projection involves a lot of time, its convention may be used to represent the actual component. Figure 2.27 shows typical examples of conventional representaion of various machine components used in engineering drawing.

www.EngineeringBooksPdf.com

Type	Convention	Material
Metals	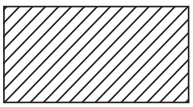	Steel, Cast Iron, Copper and its Alloys, Aluminium and its Alloys, etc.
	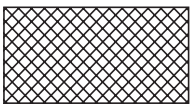	Lead, Zinc, Tin, White-metal, etc.
Glass	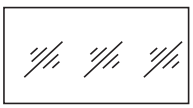	Glass
Packing and Insulating material	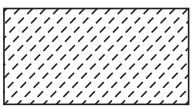	Porcelain, Stoneware, Marble, Slate, etc.
	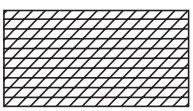	Asbestos, Fibre, Felt, Synthetic resin products, Paper, Cork, Linoleum, Rubber, Leather, Wax, Insulating and Filling materials, etc.
Liquids	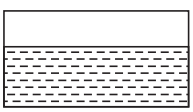	Water, Oil, Petrol, Kerosene, etc.
Wood	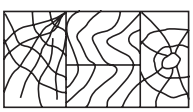	Wood, Plywood, etc.
Concrete	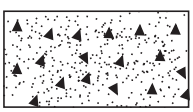	A mixture of Cement, Sand and Gravel

Fig. 2.26 Conventional representation of materials

2.8 DIMENSIONING

A drawing of a component, in addition to providing complete shape description, must also furnish information regarding the size description. These are provided through the distances between the surfaces, location of holes, nature of surface finsih, type of material, etc. The expression of these features on a drawing, using lines, symbols, figures and notes is called dimensioning.

2.8.1 General Principles

Dimension is a numerical value expressed in appropriate units of measurment and indicated on drawings, using lines, symbols, notes, etc., so that all features are completely defined.

www.EngineeringBooksPdf.com

Title	Subject	Convention
Straight knurling	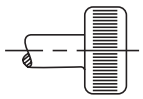	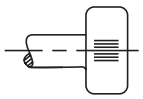
Diamond knurling	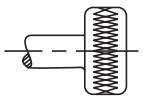	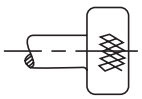
Square on shaft	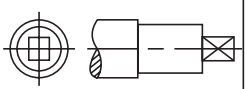	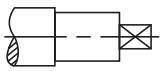
Holes on circular pitch	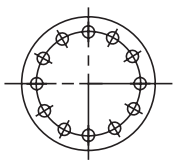	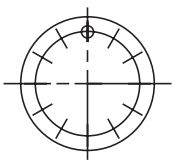
Bearings	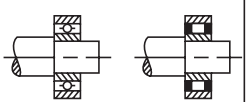	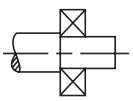
External screw threads (Detail)	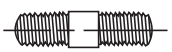	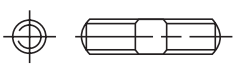
Internal screw threads (Detail)	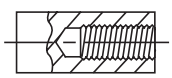	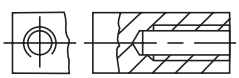
Screw threads (Assembly)	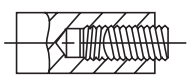	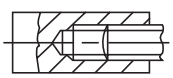

(a)

Fig. 2.27 Conventional representation of machine components (*Contd.*)

www.EngineeringBooksPdf.com

Title	Subject	Convention
Splined shafts	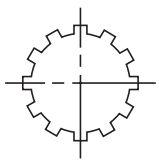	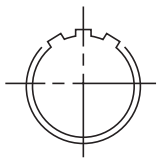
Interrupted views	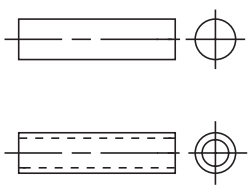	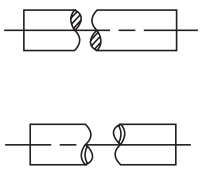
Semi-elliptic leaf spring		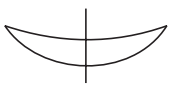
Semi-elliptic leaf spring with eyes		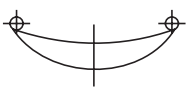

	Subject	Convention	Diagrammatic Representation
Cylindrical compression spring	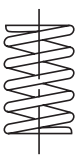		
Cylindrical tension spring			

(b)

Fig. 2.27 Conventional representation of machine components (*Contd.*)

www.EngineeringBooksPdf.com

Title	Convention
Spur gear	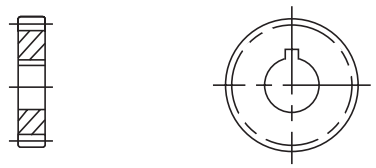
Bevel gear	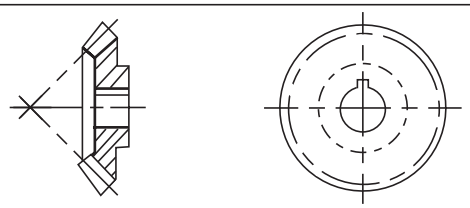
Worm wheel	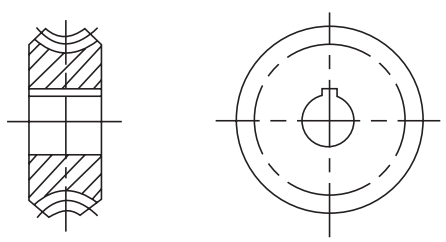
Worm	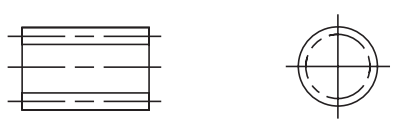

Fig. 2.27 Conventional representation of machine components

1. As far as possible, dimensions should be placed outside the view.
2. Dimensions should be taken from visible outlines rather than from hidden lines.
3. Dimensioning to a centre line should be avoided except when the centre line passes through the centre of a hole.
4. Each feature should be dimensioned once only on a drawing.
5. Dimensions should be placed on the view or section that relates most clearly to the corresponding features.
6. Each drawing should use the same unit for all dimensions, but without showing the unit symbol.
7. No more dimensions than are necessary to define a part should be shown on a drawing.
8. No features of a part should be defined by more than one dimension in any one direction.

2.8.2 Method of Execution

The elements of dimensioning include the projection line, dimension line, leader line, dimension line termination, the origin indication and the dimension itself. The various elements of

www.EngineeringBooksPdf.com

dimensioning are shown in Figs. 2.28 and 2.29. The following are some of the principles to be adopted during execution of dimensioning:

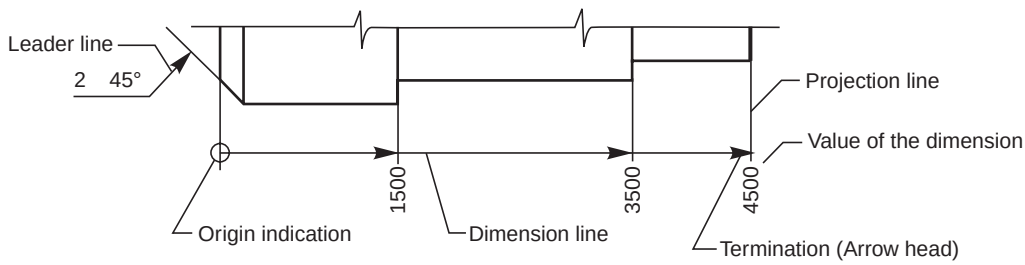

Fig. 2.28 Elements of dimensioning

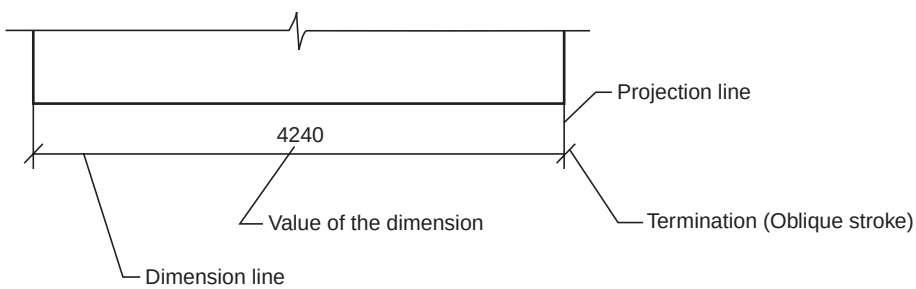

Fig. 2.29

1. Projection and dimension lines should be drawn as thin continuous lines.

2. Projection lines should extend slightly beyond the respective dimension lines.

3. Projection lines should be drawn perpendicular to the feature being dimensioned. Where necessary, they may be drawn obliquely, but parallel to each other (Fig. 2.30). However, they must be in contact with the feature.

4. Projection lines and dimension lines should not cross each other, unless it is unavoidable (Fig. 2.31).

5. A dimension line should be shown unbroken, even where the feature to which it refers, is shown broken (Fig. 2.32).

6. A centre line or the outline of a part should not be used as a dimension line, but may be used in place of projection line (Fig. 2.31).

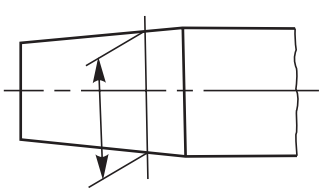

Fig. 2.30

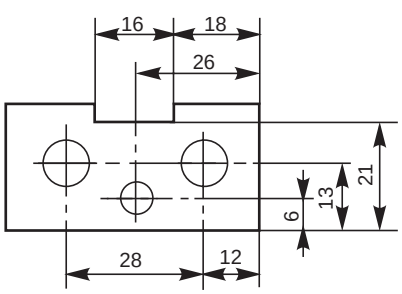

Fig. 2.31

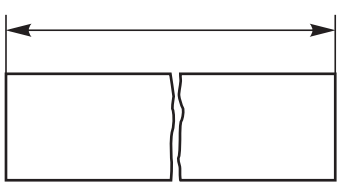

Fig. 2.32

www.EngineeringBooksPdf.com

2.8.3 Termination and Origin Indication

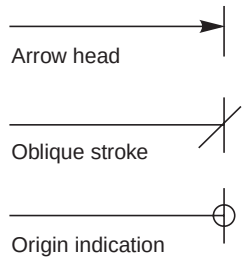

Fig. 2.33

Dimension lines should show distinct termination, in the form of arrow heads or oblique strokes or where applicable, an origin indication. Two dimension line terminations and an origin indication are shown in Fig. 2.33. In this,

1. the arrow head is drawn as short lines, having an included angle of 15°, which is closed and filled-in.
2. the oblique stroke is drawn as a short line, inclined at 45°.
3. the origin indication is drawn as a small open circle of approximately 3 mm in diameter.

The size of the terminations should be proportionate to the size of the drawing on which they are used. Where space is limited, arrow head termination may be shown outside the intended limits of the dimension line that is extended for that purpose. In certain other cases, an oblique stroke or a dot may be substituted (Fig. 2.34).

Where a radius is dimensioned, only one arrow head termination, with its point on the arc end of the dimension line, should be used (Fig. 2.35). However, the arrow head termination may be either on the inside or outside of the feature outline, depending upon the size of feature.

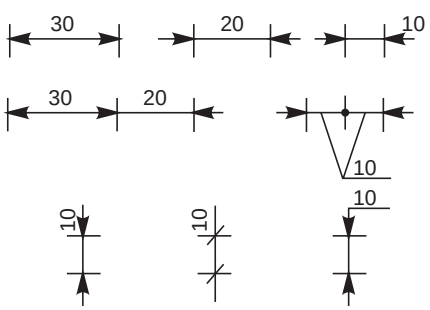

Fig. 2.34

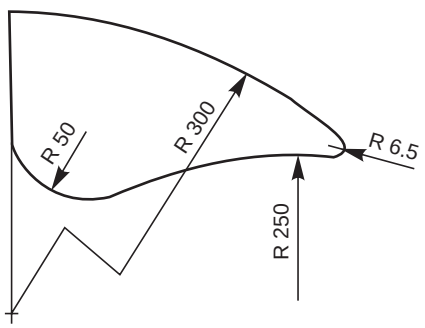

Fig. 2.35

2.8.4 Methods of Indicating Dimensions

Dimensions should be shown on drawings in characters of sufficient size, to ensure complete legibility. They should be placed in such a way that they are not crossed or separated by any other line on the drawing. Dimensions should be indicated on a drawing, according to one of the following two methods. However, only one method should be used on any one drawing.

METHOD–1 (Aligned System)

Dimensions should be placed parallel to their dimension lines and preferably near the middle, above and clear-off the dimension line (Fig. 2.36). An exception may be made where superimposed running dimensions are used (Fig. 2.44 *b*)

Dimensions may be written so that they can be read from the bottom or from the right side of the drawing. Dimensions on oblique dimension lines should be oriented as shown in Fig. 2.37. Angular dimensions may be oriented as shown in Fig. 2.38.

www.EngineeringBooksPdf.com

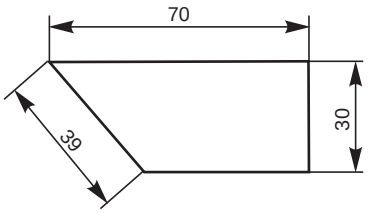

Fig. 2.36

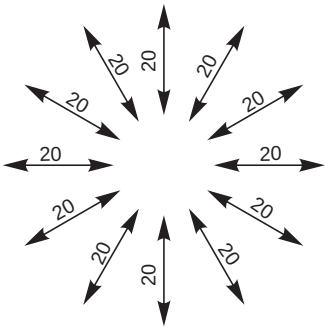

Fig. 2.37 Oblique dimensioning

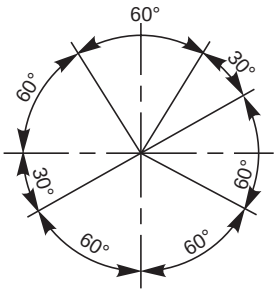

Fig. 2.38 Angular dimensioning

METHOD–2 (Uni-directional System)

Dimensons should be indicated so that they can be read from the bottom of the drawing only. Non-horizontal dimension lines are interrupted, preferably near the middle, for insertion of the dimension (Fig. 2.39).

Angular dimensions may be oriented as in Fig. 2.40.

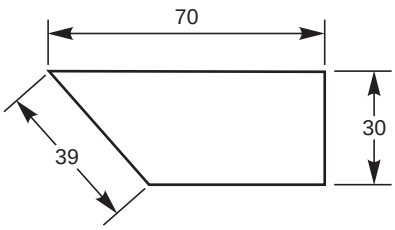

Fig. 2.39

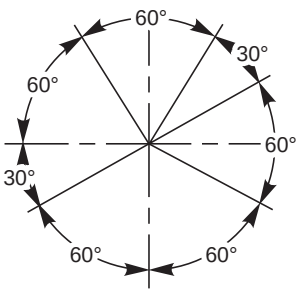

Fig. 2.40 Angular dimensioning

Dimensions can be, (*i*) above the extension of the dimension line, beyond one of the terminations, where space is limited (Fig. 2.34) or (*ii*) at the end of a leader line, which teminates on a dimension line, that is too short to permit normal dimension placement (Fig. 2.34) or (*iii*) above a horizontal extension of a dimension line, where space does not allow placement at the interruption of a non-horizontal dimension line (Fig. 2.41). Values of dimensions, out of scale (except where break lines are used) should be underlined as shown in Fig. 2.41.

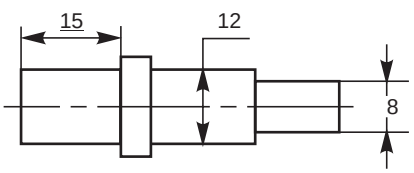

Fig. 2.41

The following indications (symbols) are used with dimensions to reveal the shape identification and to improve drawing interpretation. The symbol should precede the dimensions (Fig. 2.42).

ϕ : Diameter Sϕ : Spherical diameter R : Radius SR : Spherical radius □ : Square

www.EngineeringBooksPdf.com

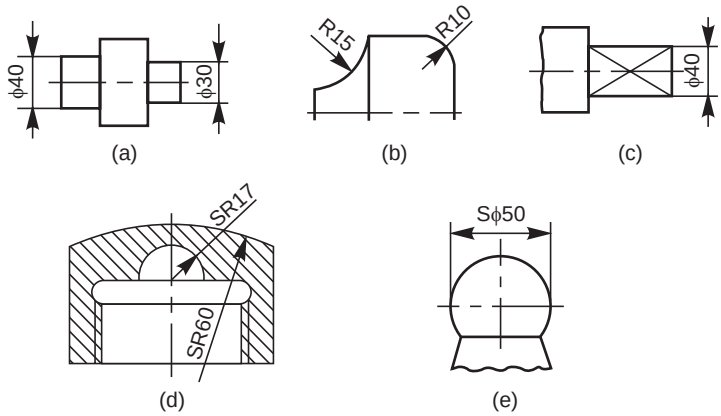

Fig. 2.42 Shape identification symbols

2.8.5 Arrangement of Dimensions

The arrangement of dimensions on a drawing must indicate clearly the design purpose. The following are the ways of arranging the dimensions.

2.8.5.1 Chain Dimensions

Chains of single dimensions should be used only where the possible accumulation of tolerances does not endanger the functional requirement of the part (Fig. 2.43).

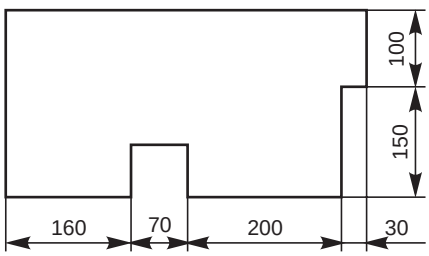

Fig. 2.43 Chain dimensioning

2.8.5.2 Parallel Dimensions

In parallel dimensoning, a number of dimension lines, parallel to one another and spaced-out are used. This method is used where a number of dimensions have a common datum feature (Fig. 2.44 *a*).

2.8.5.3 Super-imposed Running Dimensions

These are simplified parallel dimensons and may be used where there are space limitations (Fig. 2.44 *b*).

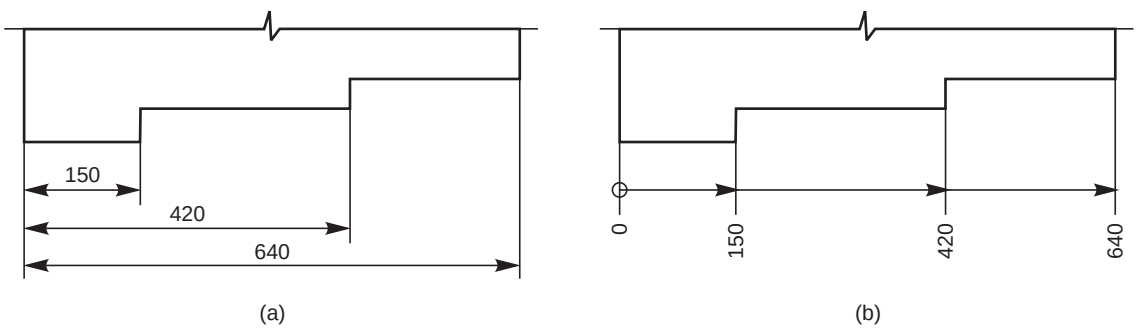

Fig. 2.44 Parallel dimensioning

2.8.5.4 Combined Dimensions

These are the result of simultaneous use of chain and parallel dimensions (Fig. 2.45).

www.EngineeringBooksPdf.com

2.8.5.5 Co-ordinate Dimensions

The sizes of the holes and their co-ordinates may be indicated directly on the drawing; or they may be conveniently presented in a tabular form, as shown in Fig. 2.46.

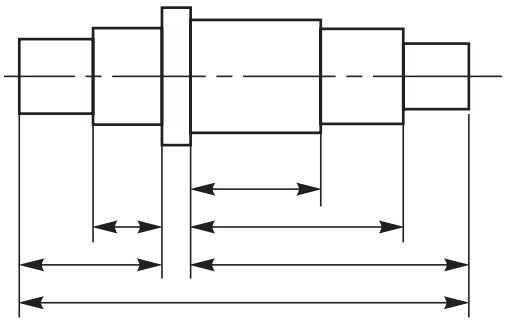

Fig. 2.45 Combined dimensioning

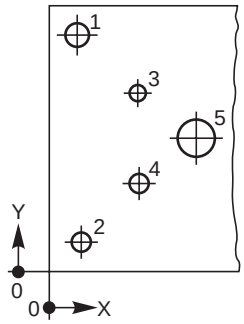

	X	Y	ϕ
1	20	160	15.5
2	20	20	13.5
3	60	120	11
4	60	60	13.5
5	100	90	26
6			
7			
8			
9			
10			

Fig. 2.46 Co-ordinate dimensinong

2.8.6 Special Indications

2.8.6.1 Diameters

Diameters should be dimensioned on the most appropriate view to ensure clarity. The dimension value should be preceded by ϕ. Figure 2.47 shows the method of dimensioning diameters.

2.8.6.2 Chords, Arcs, Angles and Radii

The dimensioning of chords, arcs and angles should be as shown in Fig. 2.48. Where the centre of an arc falls outside the limits of the space available, the dimension line of the radius should be broken or interrupted according to whether or not it is necessary to locate the centre (Fig. 2.35).

Where the size of the radius can be derived from other dimensions, it may be indicated by a radius arrow and the symbol R, without an indication of the value (Fig. 2.49).

2.8.6.3 Equi-distant Features

Linear spacings with equi-distant features may be dimensioned as shown in Fig. 2.50.

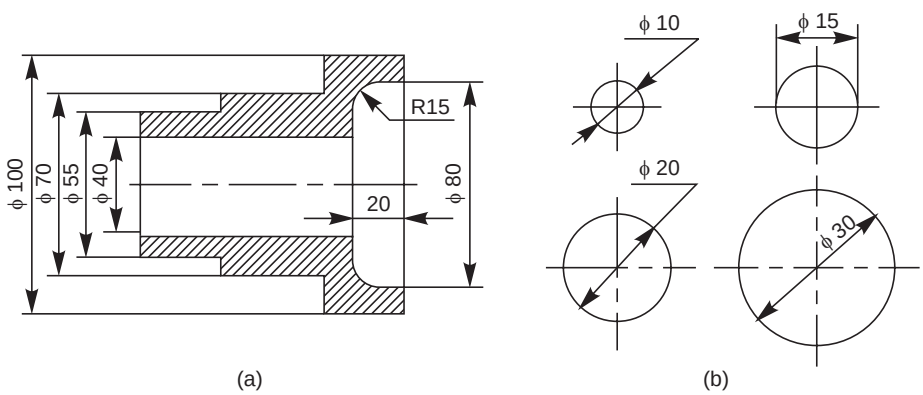

Fig. 2.47 Dimensioning of diameters

www.EngineeringBooksPdf.com

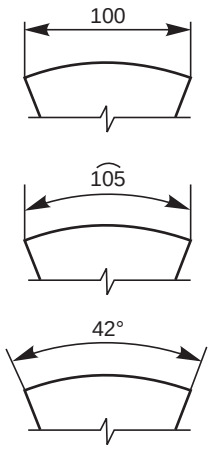

Fig. 2.48 Dimensioning of chords, arcs and angles

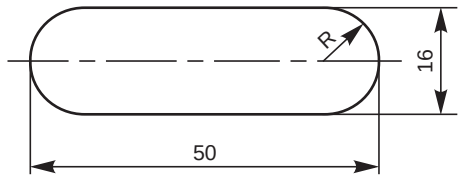

Fig. 2.49 Dimensioning of radius

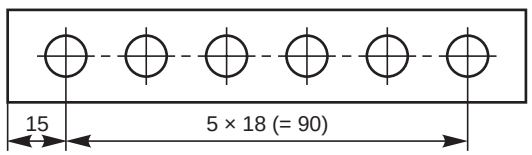

Fig. 2.50 Dimensioning equi-distant features

2.8.6.4 Chamfers and Countersunks

Chamfers may be dimensioned as shown in Fig. 2.51 and countersunks, as shown in Fig. 2.52.

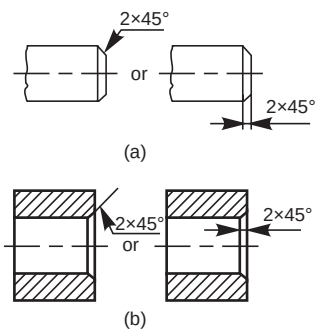

Fig. 2.51 Dimensioning chamfers

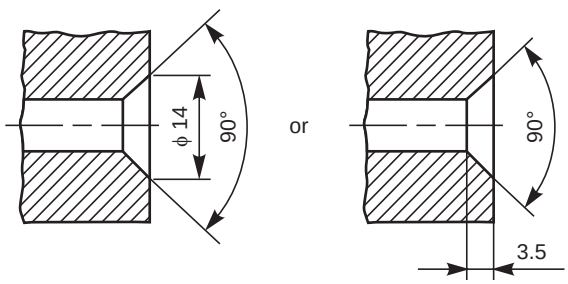

Fig. 2.52 Dimensioning countersunks

2.8.6.5 Screw Threads

Screw threads are always specified with proper designation. The nominal diameter is preceded by the letter M. The useful length of the threaded portion only should be dimenioned as shown in Fig. 2.53. While dimensioning the internal threads, the length of the drilled hole should also be dimensioned (Fig. 2.53).

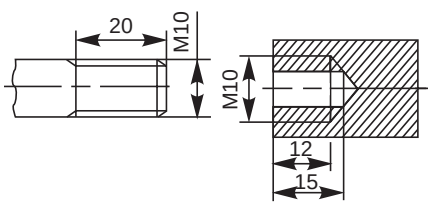

Fig. 2.53 Dimensioning screw threads

2.8.6.6 Tapered Features

Tapered features are dimensioned, either by specifying the diameters at either end and the length, or the length, one of the diameters and the taper or the taper angle (Fig. 2.54 *a*).

A slope or flat taper is defined as the rise per unit length and is dimensioned by the ratio of the difference between the heights to its length (Fig. 2.54 *b*).

www.EngineeringBooksPdf.com

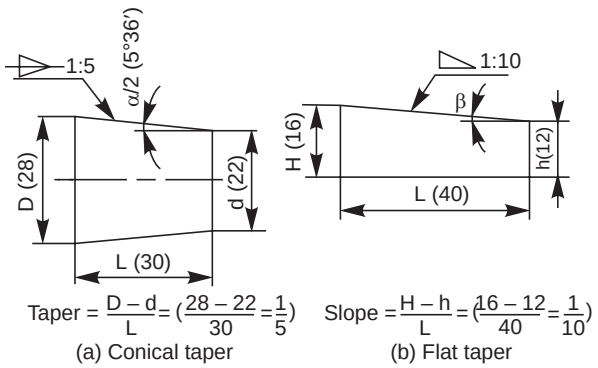

Fig. 2.54 Dimensioning tapered features

2.8.6.7 Notes

Notes should always be written horizontally in capital letters and begin above the leader line and may end below also. Further, notes should be brief and clear and the wording should be standard in form. The standard forms of notes and the method of indication, for typical cases is shown in Fig. 2.55. The meaning of the notes is given in Table 2.8.

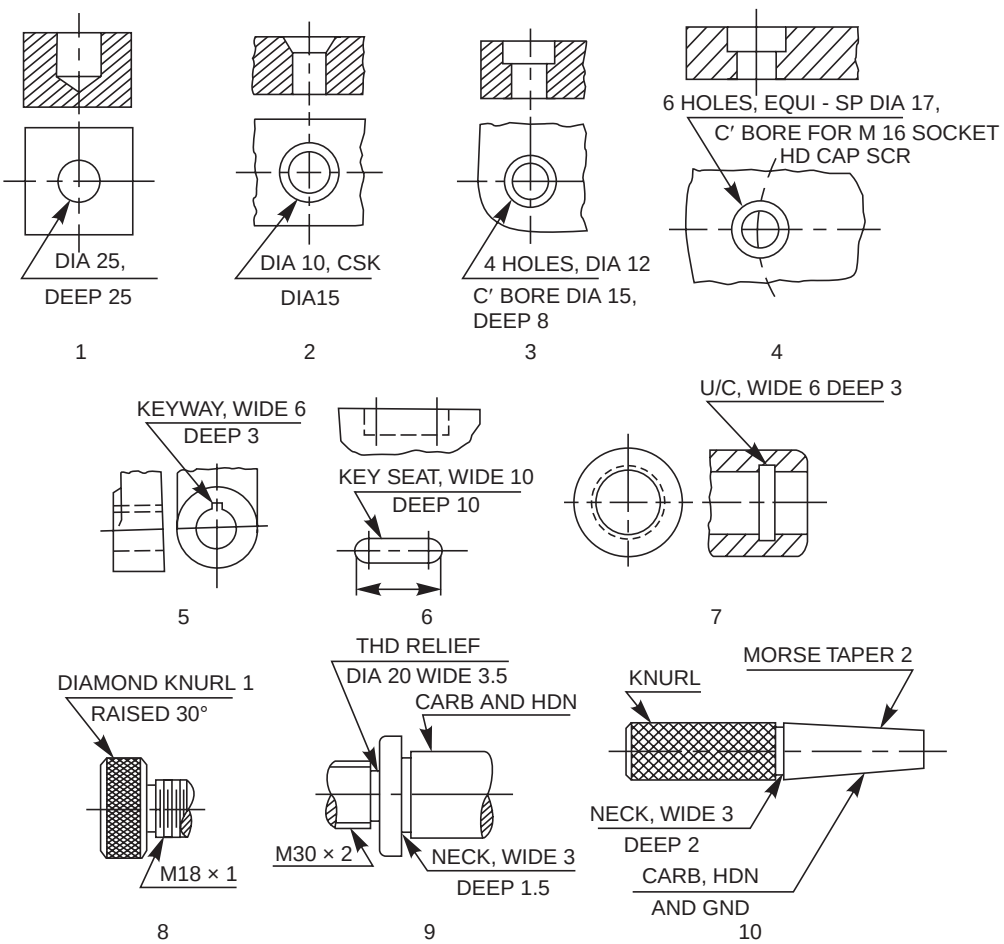

Fig. 2.55 Method of indicating notes (*Contd.*)

www.EngineeringBooksPdf.com

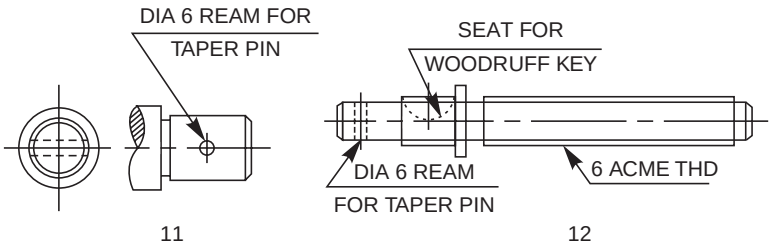

Fig. 2.55 Method of indicating notes

Table 2.8 Meaning of notes given in Fig. 2.55

S.No.	*Note*	*Meaning/Instruction*
1.	DIA 25 DEEP 25	Drill a hole of diameter 25 mm, to a depth of 25 mm.
2.	DIA 10 CSK DIA 15	Drill a through hole of diameter 10 mm and countersink to get 15 mm on top.
3.	4 HOLES, DIA 12 C BORE DIA 15 DEEP 8	Dirll through hole of ϕ 12 mm, counterbore to a depth of 8 mm, with a ϕ 15 mm, the number of such holes being four.
4.	6 HOLES, EQUI–SP DIA 17 C BORE FOR M 16 SOCKET HD CAP SCR	Drill a through hole of ϕ 17 and counterbore to insert a socket headed cap screw of M 16. Six holes are to be made equi-spaced on the circle.
5.	KEYWAY, WIDE 6 DEEP 3	Cut a key way of 6 mm wide and 3 mm depth.
6.	KEY SEAT, WIDE 10 DEEP 10	Cut a key seat of 10 mm wide and 10 mm deep to the length shown.
7.	U/C, WIDE 6 DEEP 3	Machine an undercut of width 6 mm and dpeth 3 mm.
8.	(*a*) DIAMOND KNURL 1 RAISED 30°	Make a diamond knurl with 1 mm pitch and end chamfer of 30°.
	(*b*) M 18 × 1	Cut a metric thread of nominal diameter 18 mm and pitch 1 mm.
9.	(*a*) THD RELIEF, DIA 20 WIDE 3.5	Cut a relief for thread with a diameter of 20.8 mm and width 3.5 mm.
	(*b*) NECK, WIDE 3 DEEP 1.5	Turn an undercut of 3 mm width and 1.5 mm depth
	(*c*) CARB AND HDN	Carburise and harden.
10.	(*a*) CARB, HDN AND GND	Carburise, harden and grind.
	(*b*) MORSE TAPER 2	Morse taper No. 1 to be obtained.
11.	DIA 6 REAM FOR TAPER PIN	Drill and ream with taper reamer for a diameter of 6 mm to suit the pin specified.
12.	6 ACME THD	Cut an ACME thread of pitch 6 mm.

www.EngineeringBooksPdf.com

2.9 STANDARD ABBREVIATIONS

Standard abbreviations in draughting are recommended as notes to provide a brief and clear instructions. Table 2.9 provides the draughting abbreviations for general terms and Table 2.10 represents material abbreviations.

Table 2.9 Draughting abbreviations

Term	*Abbreviation*	*Term*	*Abbreviation*
Across corners	A/C	Maunfacture	MFG
Across flats	A/F	Material	MATL
Approved	APPD	Maximum	max.
Approximate	APPROX	Metre	m
Assembly	ASSY	Mechanical	MECH
Auxiliary	AUX	Millimetre	mm
Bearing	BRG	Minimum	min.
Centimetre	Cm	Nominal	NOM
Centres	CRS	Not to scale	NTS
Centre line	CL	Number	No.
Centre to centre	C/L	Opposite	OPP
Chamfered	CHMED	Outside diameter	OD
Checked	CHD	Pitch circle	PC
Cheese head	CH HD	Pitch circle diameter	PCD
Circular pitch	CP	Quantity	QTY
Circumference	OCE	Radius	R
Continued	CONTD	Radius in a note	RAD
Counterbore	C BORE	Reference	REF
Countersunk	CSK	Required	REQD
Cylinder	CYL	Right hand	RH
Diameter	DIA	Round	RD
Diametral pitch	DP	Screw	SCR
Dimension	DIM	Serial number	Sl. No.
Drawing	DRG	Specification	SPEC
Equi-spaced	EQUI-SP	Sphere/Spherical	SPHERE
External	EXT	Spot face	SF
Figure	FIG.	Square	SQ
General	GNL	Standard	STD
Ground level	GL	Symmetrical	SYM
Ground	GND	Thick	THK
Hexagonal	HEX	Thread	THD
Inspection	INSP	Through	THRU
Inside diameter	ID	Tolerance	TOL
Internal	INT	Typical	TYP
Left hand	LH	Undercut	U/C
Machine	M/C	Weight	WT

www.EngineeringBooksPdf.com

Table 2.10 Abbreviations for materials

Material	*Abbreviation*
Aluminium	AL
Brass	BRASS
Bronze	BRONZE
Cast iron	CI
Cast steel	CS
Chromium steel	CrS
Copper	Cu
Forged steel	FS
Galvanised iron	GI
Gray iron	FG
Gunmetal	GM
High carbon steel	HCS
High speed steel	HSS
High tensile steel	HTS
Low carbon steel	LCS
Mild steel	MS
Nickel steel	Ni S
Pearlitic malleable iron	PM
Phosphor bronze	PHOS.B
Sheet steel	Sh S
Spring steel	Spring S
Structure steel	St
Tungston carbide steel	TCS
Wrought iron	WI
White metal	WM

2.10 EXAMPLES

Violations of some of the principles of drawing are indicated in Fig. 2.56 *a*. The corrected version of the same as per the BIS, SP–46: 1988 is given in Fig. 2.56 *b* and the reasons are given below:

1. Dimension should follow the shape symbol (Fig. 2.42).
2. and 3. As far as possible, features should not be used as extension lines for dimensioning.
4. Extension line should touch the feature.
5. Extension line should project beyond the dimension line.
6. Writing the dimension is not as per the aligned system.
7. Hidden lines should meet without a gap (Table 2.5 A).
8. Centre line representation is wrong. Dot should be replaced by a small dash.
9. Horizontal dimension line should not be broken to insert the value of the dimension (Figs. 2.36 to 2.49).

www.EngineeringBooksPdf.com

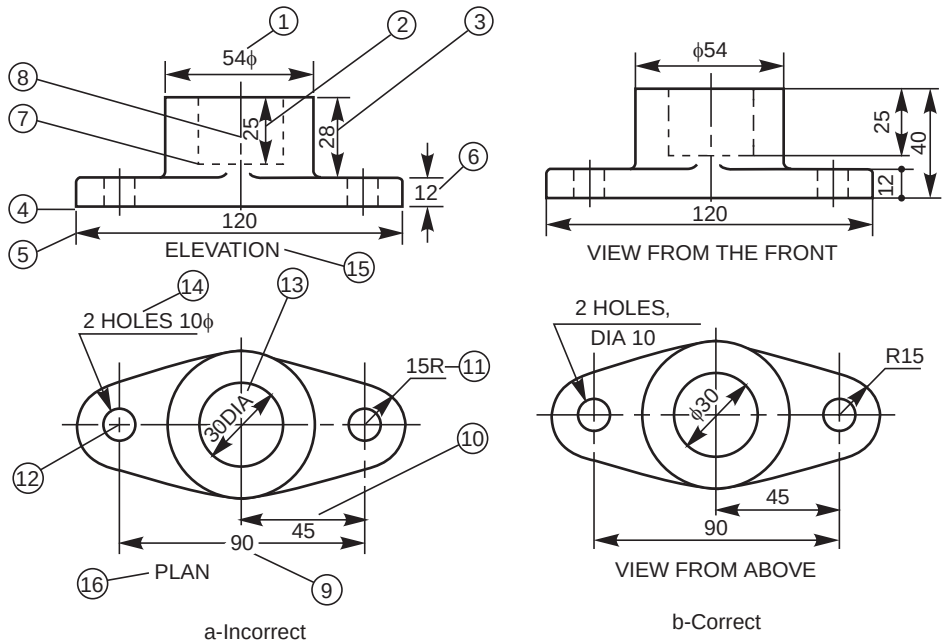

Fig. 2.56

10. Dimension should be placed above the dimension line (Fig. 2.39).
11. Radius symbol should precede the dimension (Fig. 2.42)
12. Centre lines should cross at long dashes (Table 2.5 B).
13. Dimension should be written by symbol (not abbreviation) followed by its value (Fig. 2.42).
14. Note with dimensions should be written in capitals.
15. Elevation is not the correct usage.
16. Usage of the term "plan" is obsolete in graphic language.

THEORY QUESTIONS

2.1 Describe the drawing sheet designations and their sizes as per ISO-A series.

2.2 What is the principle involved in fixing the sizes of the drawing sheets ?

2.3 What is the information generally provided by the title block and what is its maximum length ?

2.4 What do you understand by the terms, (*a*) borders and frames, (*b*) centring marks, (*c*) metric reference graduation, (*d*) zoning and (*e*) trimming marks ?

2.5 What are the scales recommended for machine drawing ?

2.6 What do you understand by, (*a*) scale = 5:1 and (*b*) scale = 1:10 ?

2.7 List out the standard thicknesses of lines that are used in machine drawing.

2.8 What should be the ratio of thick to thin line used in machine drawing ?

2.9 While finishing a drawing, what is the order of priority in the following coinciding lines:

(*a*) centre lines

(*b*) visible lines

(*c*) hidden lines.

2.10 How are leader lines terminated ?

www.EngineeringBooksPdf.com

2.11 How are sizes of letters and numerals specified ?

2.12 How do you represent a sectioned surface on a drawing ?

2.13 Name the features which should not be shown hatched, when they are sectioned longitudinally.

2.14 What is the angle at which hatching lines are drawn to the axis or to the main outline of the section.

2.15 What do you understand by revolved and removed sections ?

2.16 Explain the terms, (*a*) half section, (*b*) local section and (*c*) successive sections.

2.17 List out the elements of a dimension line.

2.18 Give the shape identification symbols for the following: (*a*) diameter, (*b*) radius, (*c*) square and (*d*) spherical radius.

2.19 List out the various principles to be followed while dimensioning a drawing.

2.20 What are the rules to be adopted during execution of dimensioning ?

2.21 Discuss the two methods, normally followed while dimensioing a drawing.

2.22 Discuss the various ways of arranging dimensions.

2.23 Explain the following notes:

(*a*) 4 HOLES, EQUI-SP 12 C BORE 15 DEEP 8

(*b*) U/C WIDE 6 DEEP 3

(*c*) 6 REAM FOR TAPER PIN 6 × 50

DRAWING EXERCISES

2.1 Sketch the following types of lines:

(*a*) centre line, (*b*) cutting plane line and (*c*) long break

2.2 Sektch the conventional representation of the following materials: (*a*) bronze, (*b*) cast iron, (*c*) concrete, (*d*) wood and (*e*) white metal.

2.3 Sketch the conventional representation of the following:

(*a*) External threads, (*b*) internal threads, (*c*) splined shaft, (*d*) bearing, (*e*) square on shaft, (*f*) compression spring, (*g*) tension spring, (*h*) spur gear and (*i*) helical gear.

2.4 Sketch the various dimension line terminations and origin indication.

2.5 Sketch the method of dimensioning chamfers and countersunks.

2.6 How are, (*a*) screw threads and (*b*) tapered features, dimensioned ?

2.7 Identify (*i*) Functional, (*ii*) Non-functional and (*iii*) Auxiliary dimensions in Fig. 2.57.

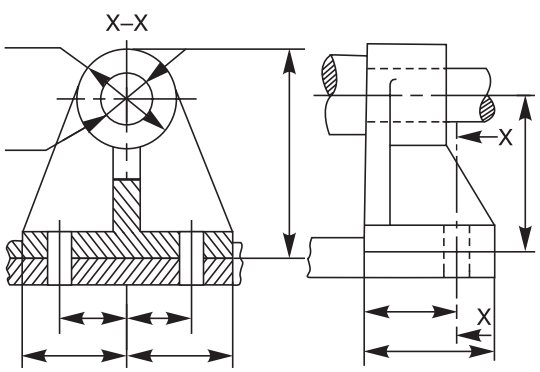

Fig. 2.57

www.EngineeringBooksPdf.com

2.8 Identify the size and location dimensions in Fig. 2.58.

2.9 Explain the meaning of the notes in Fig. 2.59.

2.10 The drawings in Fig. 2.60 are not dimensioned properly. Correct them according to standards.

2.11 Indicate the correct and incorrect methods of sectioning of machine elements represented in Fig. 2.61.

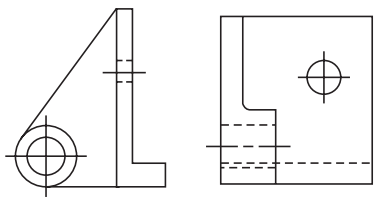

Fig. 2.58

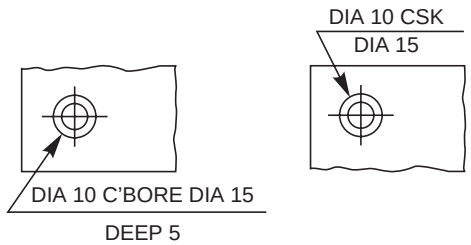

Fig. 2.59

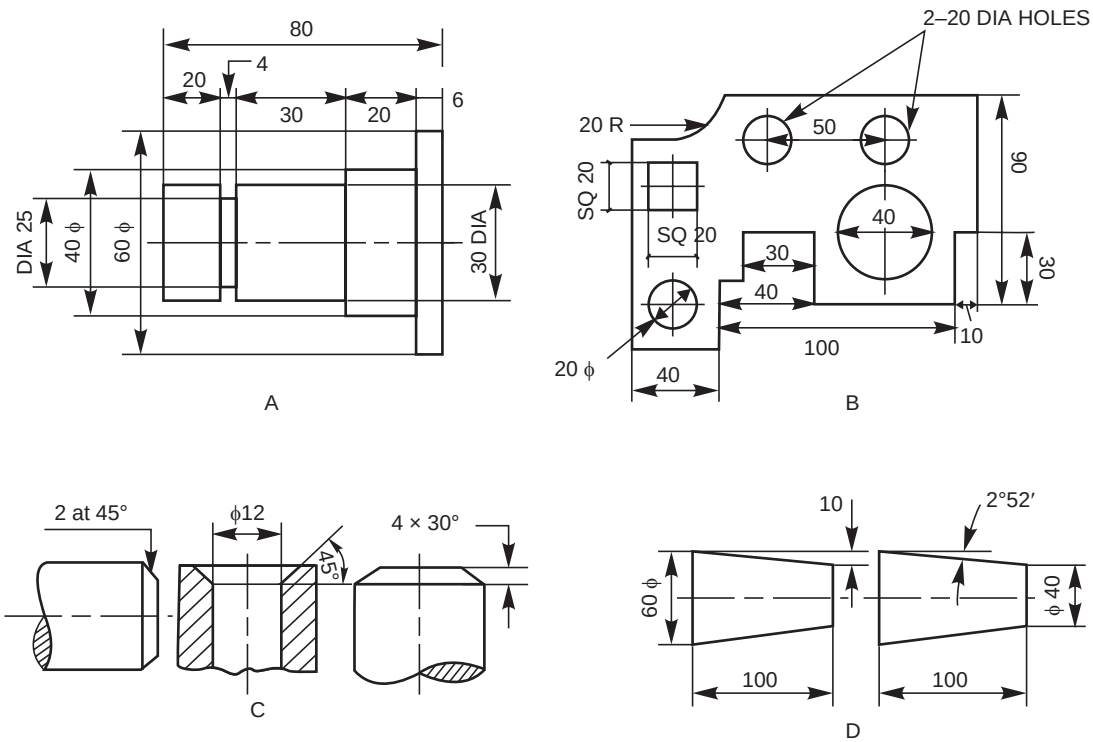

Fig. 2.60

www.EngineeringBooksPdf.com

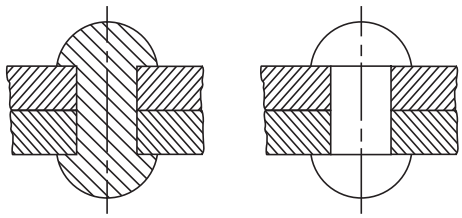

(a)

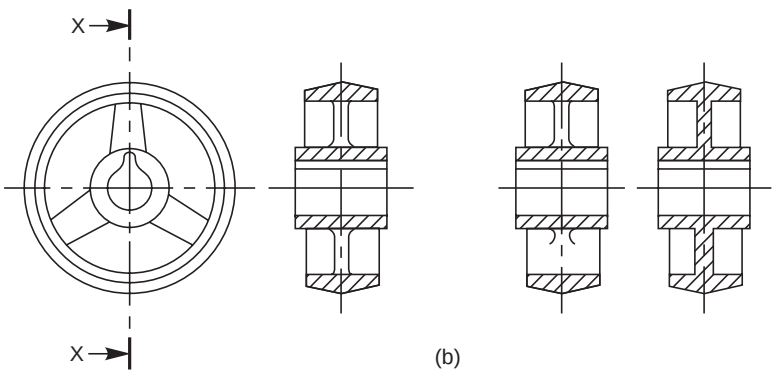

(b)

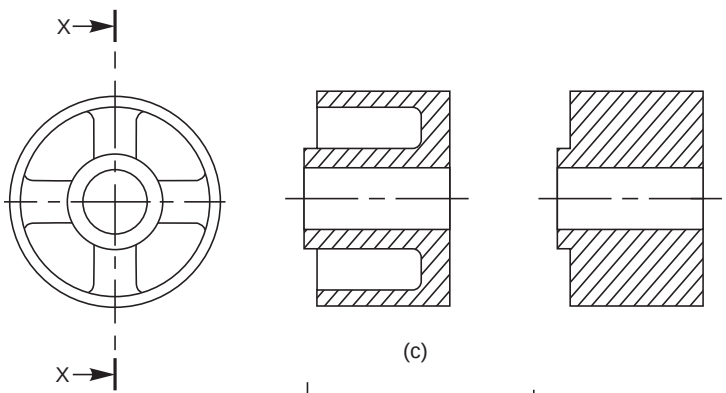

(c)

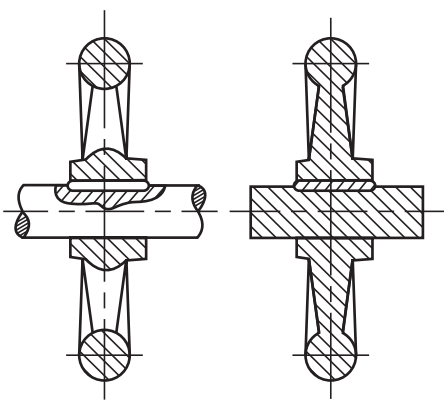

(d)

Fig. 2.61

www.EngineeringBooksPdf.com

ORTHOGRAPHIC PROJECTIONS

3

3.1 INTRODUCTION

Any object has three dimensions, viz., length, width and thickness. A projection is defined as a representation of an object on a two dimensional plane. The projections of an object should convey all the three dimensions, along with other details of the object on a sheet of paper. The elements to be considered while obtaining a projection are :

(*i*) The object

(*ii*) The plane of projection

(*iii*) The point of sight

(*iv*) The rays of sight

A projection may be obtained by viewing the object from the point of sight and tracing in correct sequence, the points of intersection between the rays of sight and the plane on to which the object is projected. A projection is called orthographic projection when the point of sight is imagined to be located at infinity so that the rays of sight are parallel to each other and intersect the plane of projection at right angle to it.

The principles of orthographic projection may be followed in four different angles or systems, viz., first, second, third and fourth angle projections. A projection is said to be first, second, third or fourth angle when the object is imagined to be in the first, second, third or fourth quadrant respectively. However, the Bureau of Indian Standards (SP–46:1988) prefers first angle projection and throughout this book, first angle projection is followed.

3.2 PRINCIPLE OF FIRST ANGLE PROJECTION

In first angle projection, the object is imagined to be positioned in the first quadrant. The view from the front of the object is obtained by looking at the object from the right side of the quadrant and tracing in correct sequence, the points of intersection between the projection plane and the rays of sight extended. The object is between the observer and the plane of projection (vertical plane). Here, the object is imagined to be transparent and the projection lines are extended from various points of the object to intersect the projection plane. Hence, in first angle projection, any view is so placed that it represents the side of the object away from it.

www.EngineeringBooksPdf.com

3.3 METHODS OF OBTAINING ORTHOGRAPHIC VIEWS

3.3.1 View From the Front

The view from the front of an object is defined as the view that is obtained as projection on the vertical plane by looking at the object normal to its front surface. It is the usual practice to position the object such that its view from the front reveals most of the important features. Figure 3.1 shows the method of obtaining the view from the front of an object.

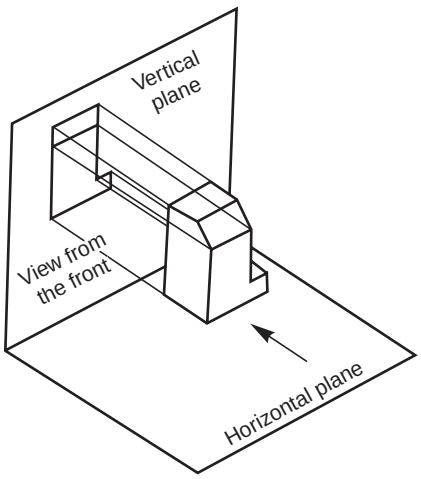

Fig. 3.1 Principle of obtaining the view from the front

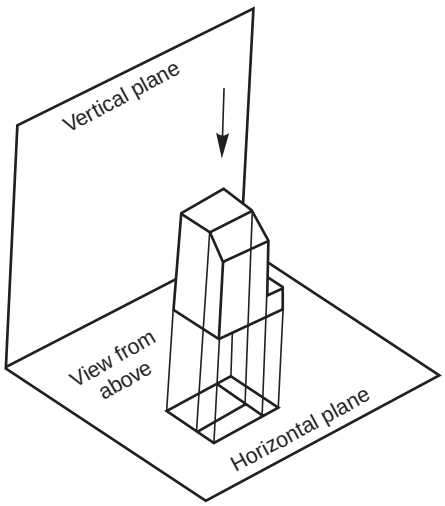

Fig. 3.2 Principle of obtaining the view from above

3.3.2 View From Above

The view from above of an object is defined as the view that is obtained as projection on the horizontal plane, by looking the object normal to its top surface. Figure 3.2 shows the method of obtaining the view from above of an object.

3.3.3 View From the Side

The view from the side of an object is defined as the view that is obtained as projection on the profile plane by looking the object, normal to its side surface. As there are two sides for an object, viz., left side and right side, two possible views from the side, viz., view from the left and view from the right may be obtained for any object. Figure 3.3 shows the method of obtaining the view from the left of an object.

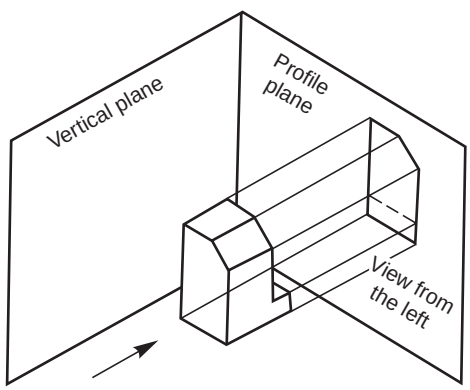

Fig. 3.3 Principle of obtaining the view from the left

www.EngineeringBooksPdf.com

3.4 PRESENTATION OF VIEWS

The different views of an object are placed on a drawing sheet which is a two dimensional one, to reveal all the three dimensions of the object. For this, the horizontal and profile planes are rotated till they coincide with the vertical plane. Figure 3.4 shows the relative positions of the views, viz., the view from the front, above and the left of an object.

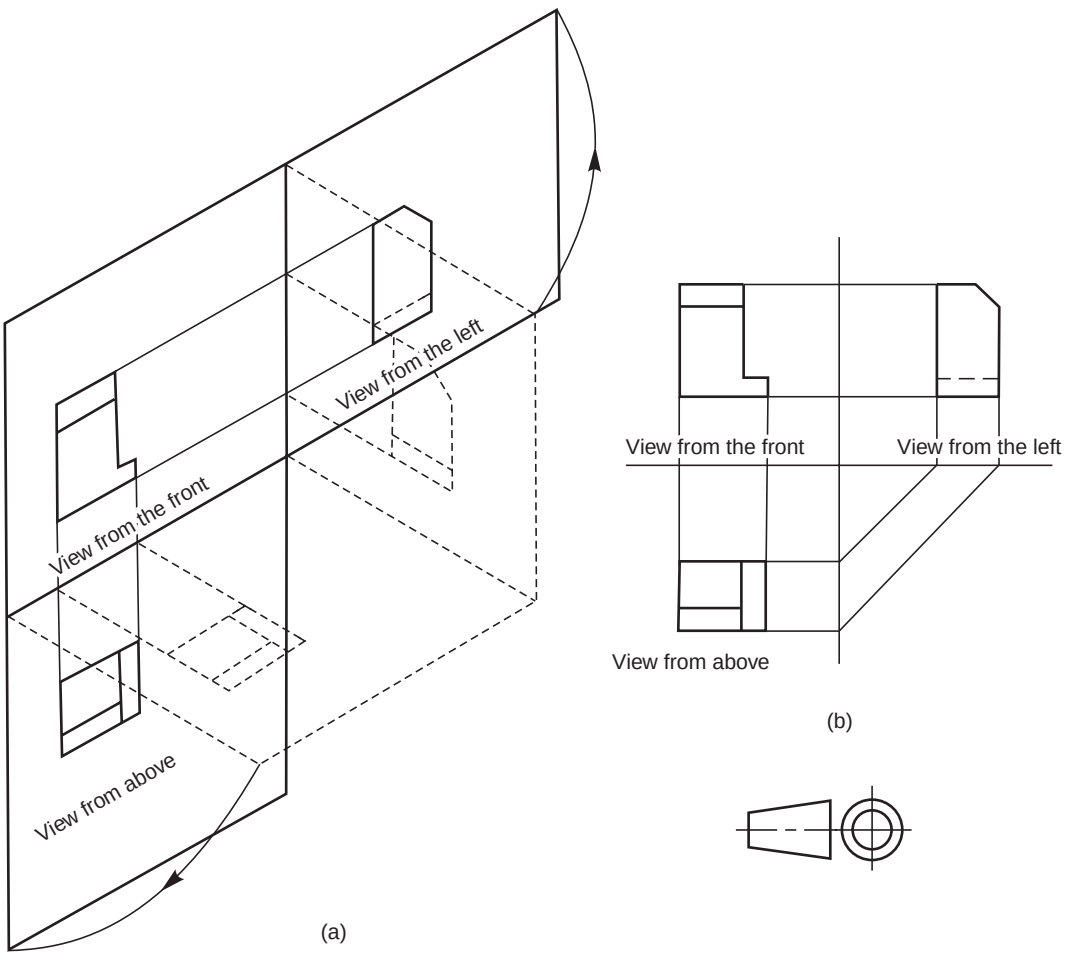

Fig. 3.4 Relative positions of the three views and the symbol

3.5 DESIGNATION AND RELATIVE POSITIONS OF VIEWS

An object positioned in space may be imagined as surrounded by six mutually perpendicular planes. So, for any object, six different views may be obtained by viewing at it along the six directions, normal to these planes. Figure 3.5 shows an object with six possible directions to obtain the different views which are designated as follows:

1. View in the direction **a** = view from the front
2. View in the direction **b** = view from above
3. View in the direction **c** = view from the left

www.EngineeringBooksPdf.com

4. View in the direction **d** = view from the right

5. View in the direction **e** = view from below

6. View in the direction **f** = view from the rear

Figure 3.6*a* shows the relative positions of the above six views in the first angle projection and Fig.3.6*b*, the distinguishing symbol of this method of projection. Figure 3.7 *a* shows the relative position of the views in the third angle projection and Fig. 3.7*b*, the distinguishing symbol of this method of projection.

NOTE A comparison of Figs. 3.6 and 3.7 reveals that in both the methods of projection, the views are identical in shape and detail. Only their location with respect to the view from the front is different.

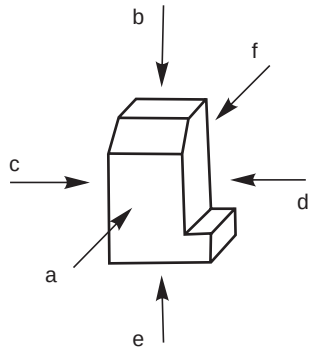

Fig. 3.5 Designation of the views

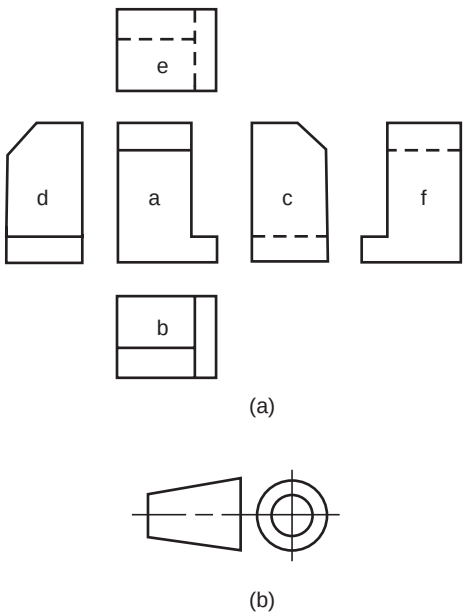

Fig. 3.6 Relative positions of six views in first angle projection

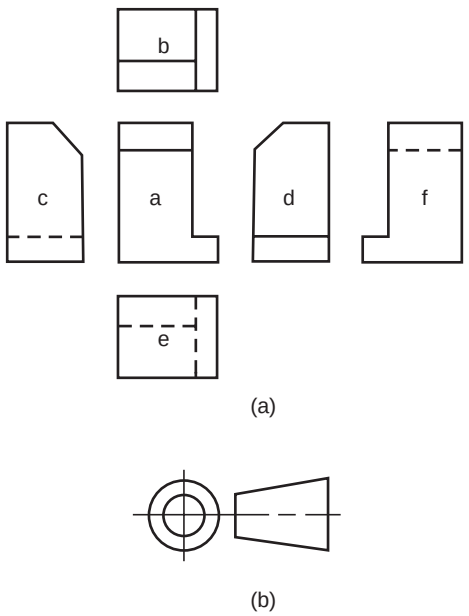

Fig. 3.7 Relative positions of six views in third angle projection

3.6 POSITION OF THE OBJECT

It is important to understand the significance of the position of the object relative to the planes of projection. To get useful information about the object in the orthographic projections, the object may be imagined to be positioned properly because of the following facts :

1. Any line on an object will show its true length, only when it is parallel to the plane of projection.

2. Any surface of an object will appear in its true shape, only when it is parallel to the plane of projection.

In the light of the above, it is necessary that the object is imagined to be positioned such that its principal surfaces are parallel to the planes of projection.

www.EngineeringBooksPdf.com

3.6.1 Hidden Lines

While obtaining the projection of an object on to any principal plane of projection, certain features of the object may not be visible. The invisible or hidden features are represented by short dashes of medium thickness. Figure 3.8 shows the application of hidden lines in the projection of an object.

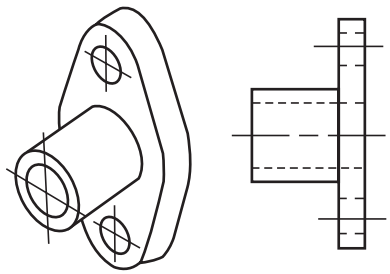

Fig. 3.8 Application of hidden lines

3.6.2 Curved Surfaces

Certain objects contain curved surfaces, tangential to other curved surfaces. The difficulty in representing the surfaces can be overcome if the following rule is observed. Wherever a tangential line drawn to the curved surface becomes a projector, a line should be drawn in the adjacent view. Figure 3.9 shows the representation of certain curved surfaces, tangential to other curved surfaces.

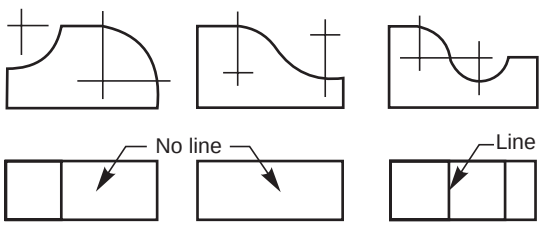

Fig. 3.9 Representation of tangential curved surfaces

Certain objects manufactured by casting technique, frequently contain corners filleted and the edges rounded. When the radius of a rounded corner is greater than 3 mm and the angle between the surfaces is more than 90°, no line is shown in the adjacent view. Figure 3.10 shows the application of the above principle.

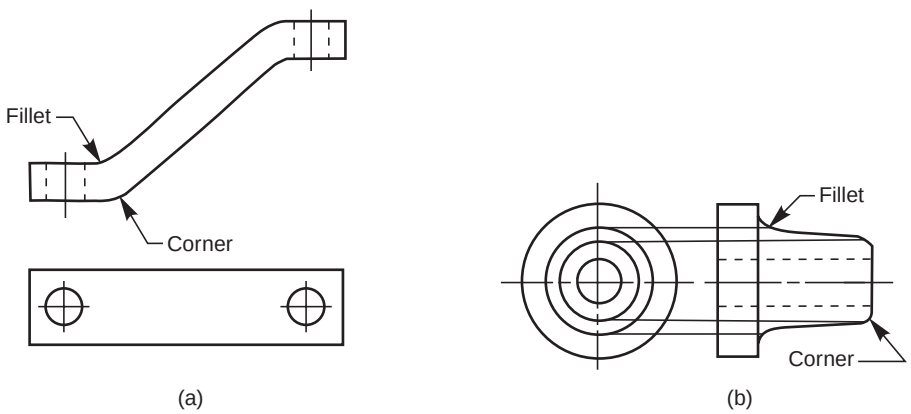

Fig. 3.10 Representation of corners and fillets

If true projection is followed in drawing the view of an object containing fillets and rounds; it will result in misleading impression. In conventional practice, fillets and rounds are represented by lines called runouts. The runouts are terminated at the point of tangency (Fig. 3.11).

3.7 SELECTION OF VIEWS

For describing any object completely through its orthographic projections, it is important to select a number of views. The number of views required to describe any object will depend

www.EngineeringBooksPdf.com

upon the extent of complexity involved in it. The higher the symmetry, the lesser the number of views required.

3.7.1 One-View Drawings

Some objects with cylindrical, square or hexagonal features or, plates of any size with any number of features in it may be represented by a single view. In such cases, the diameter of the cylinder, the side of the square, the side of the hexagon or the thickness of the plate may be expressed by a note or abbreviation. Square sections are indicated by light crossed diagonal lines. Figure 3.12 shows some objects which may be described by one-view drawings.

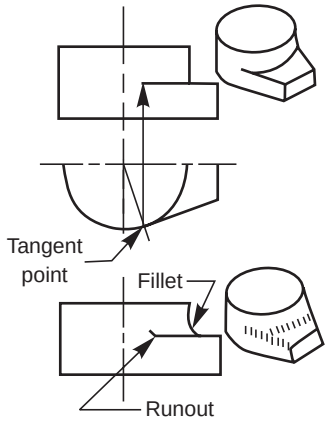

Fig. 3.11 Runouts

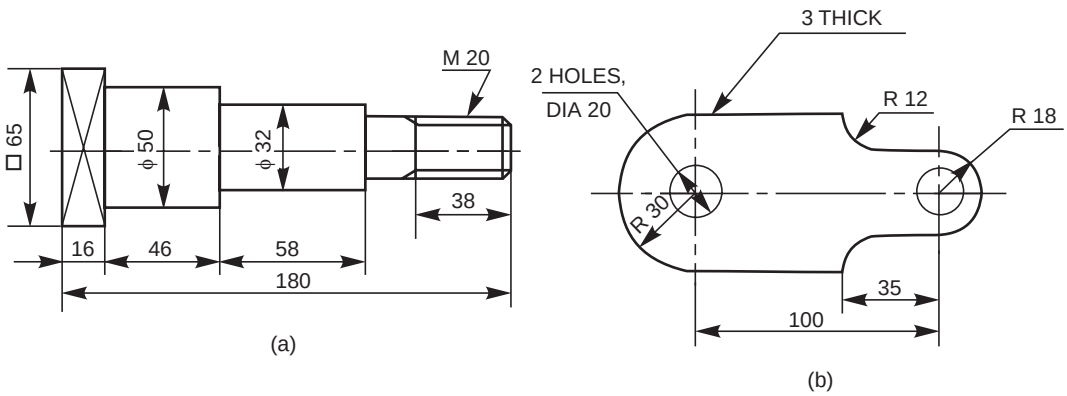

Fig. 3.12 One view drawings

3.7.2 Two-View Drawings

Some objects which are symmetrical about two axes may be represented completely by two views Normally, the largest face showing most of the details of the object is selected for drawing the view from the front. The shape of the object then determines whether the second view can be a view from above or a side view. Figure 3.13 shows the example of two-view drawings.

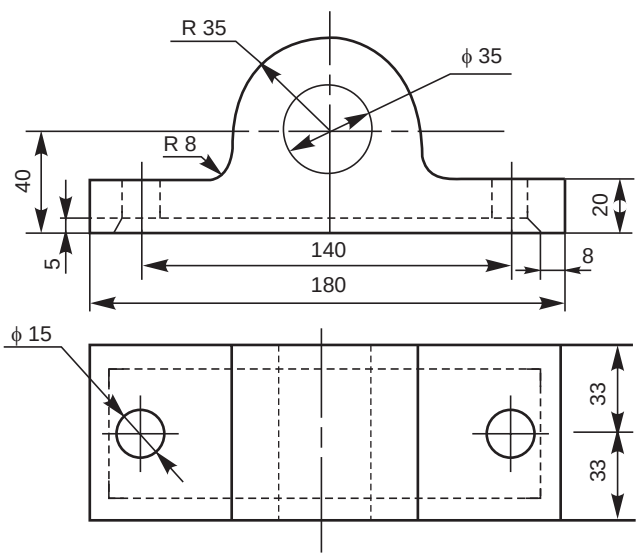

Fig. 3.13 Two view drawing

www.EngineeringBooksPdf.com

3.7.3 Three-View Drawings

In general, most of the objects consisting of either a single component or an assembly of a number of components, are described with the help of three views. In such cases, the views normally selected are the views from the front, above and left or right side. Figure 3.14 shows an object and its three necessary views.

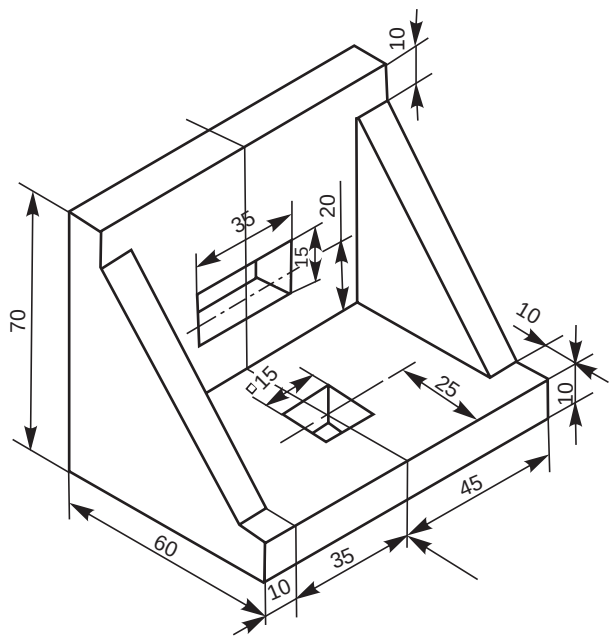

(a)

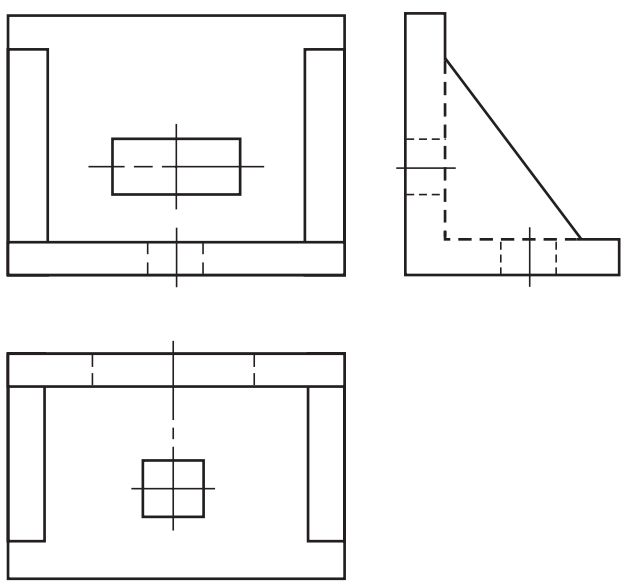

(b)

Fig. 3.14 Three view drawing

www.EngineeringBooksPdf.com

3.8 DEVELOPMENT OF MISSING VIEWS

When two views of an object are given, the third view may be developed by the use of a mitre line.

3.8.1 To construct the view from the left, from the two given views

Construction (Fig. 3.15)

1. Draw the views from the front and above.
2. Draw the projection lines to the right of the view from above.
3. Decide the distance, D from the view from the front at which, the side view is to be drawn.
4. Construct a mitre line at 45°.
5. From the points of intersection between the mitre line and the projection lines, draw vertical projection lines.
6. Draw the horizontal projection lines from the view from the front to intersect the above lines. The figure obtained by joining the points of intersection in the order is the required view.

Figure 3.16 shows the steps to be followed in constructing the view from above of an object, from the given views from the front and left.

NOTE These exercises are aimed at improving the practice in reading and developing the imagination of the student.

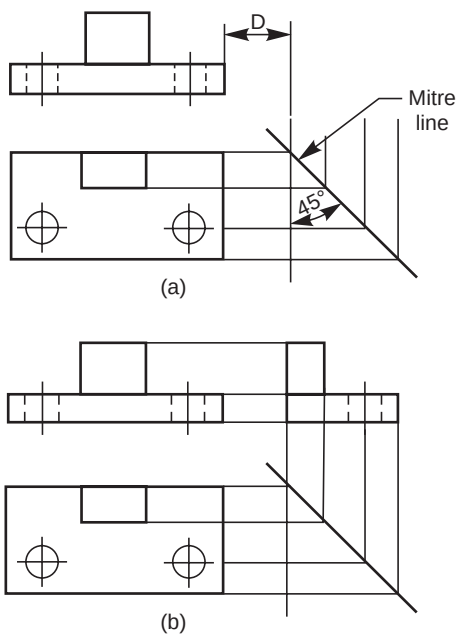

Fig. 3.15 Construction of the view from the left

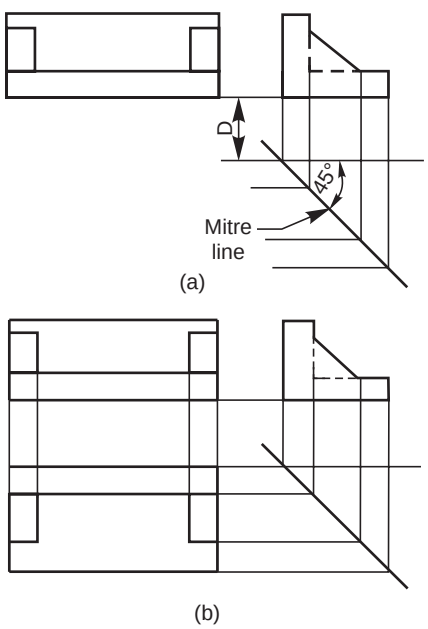

Fig. 3.16 Construction of the view from above

3.9 SPACING THE VIEWS

The views of a given object must be positioned on the drawing sheet so as to give a good and balanced appearance. Keeping in view, (*i*) number of views, (*ii*) scale and (*iii*) space between

www.EngineeringBooksPdf.com

the views, the draughtsman should decide about the placement of views on the drawing sheet. Sufficient space between the views must be provided to facilitate placement of dimensions, notes, etc., on the drawing without overcrowding.

3.10 EXAMPLES

NOTE For all the examples given, the following may be noted: Figure a-Isometric projection and Figure *b*-orthographic views. Arrow indicates the direction to obtain the view from the front.

3.1 Figures 3.17 to 3.21 show the isometric views of machine components and their view from the front, the view from above and the view from the right.

3.2 Figure 3.22 shows how to obtain the view from the front, the view from above and the view from the left from the given isometric view of a machine component.

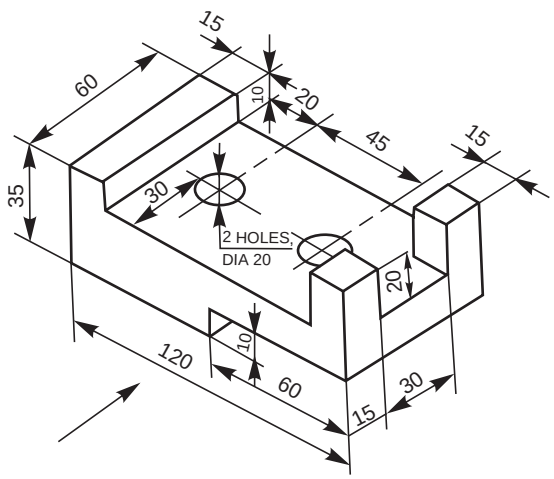

(a)

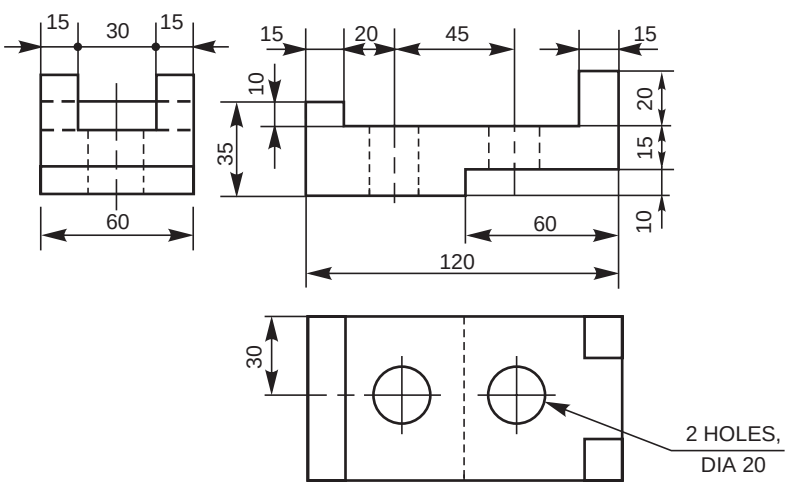

(b)

Fig. 3.17

www.EngineeringBooksPdf.com

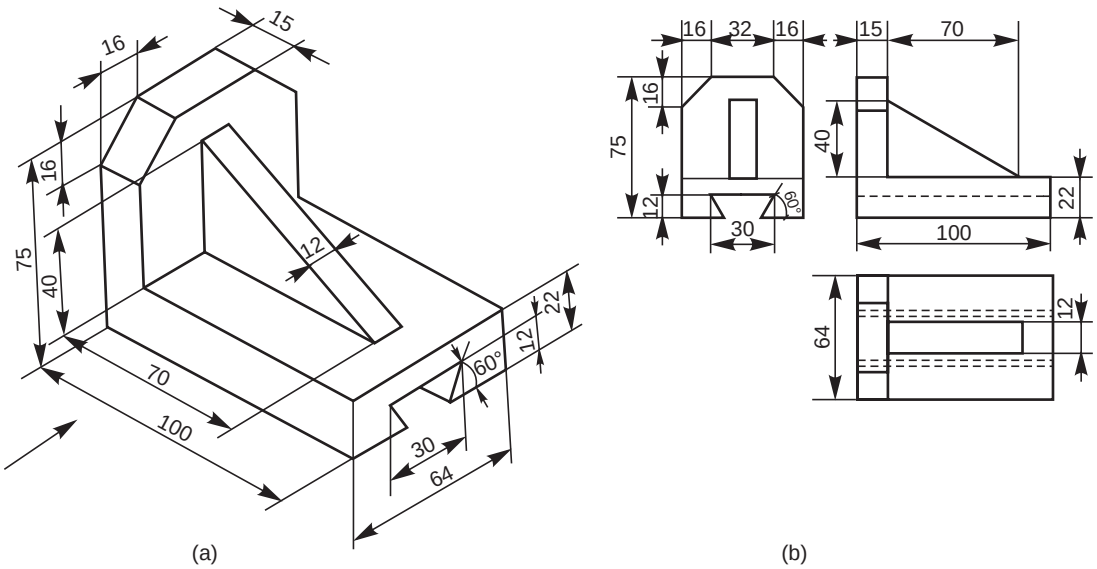

Fig. 3.18

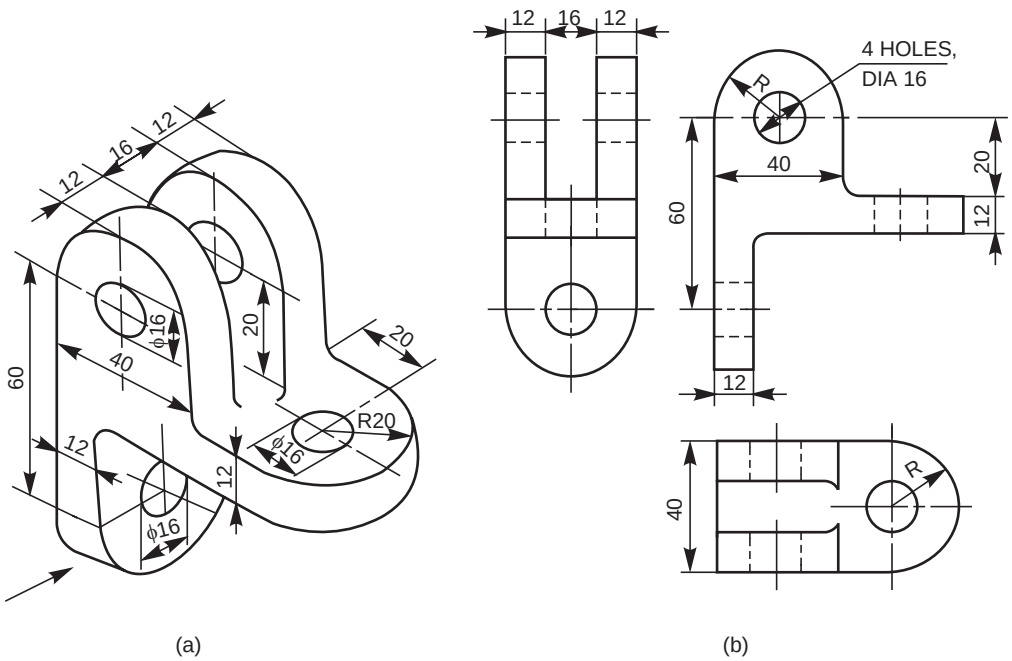

Fig. 3.19

www.EngineeringBooksPdf.com

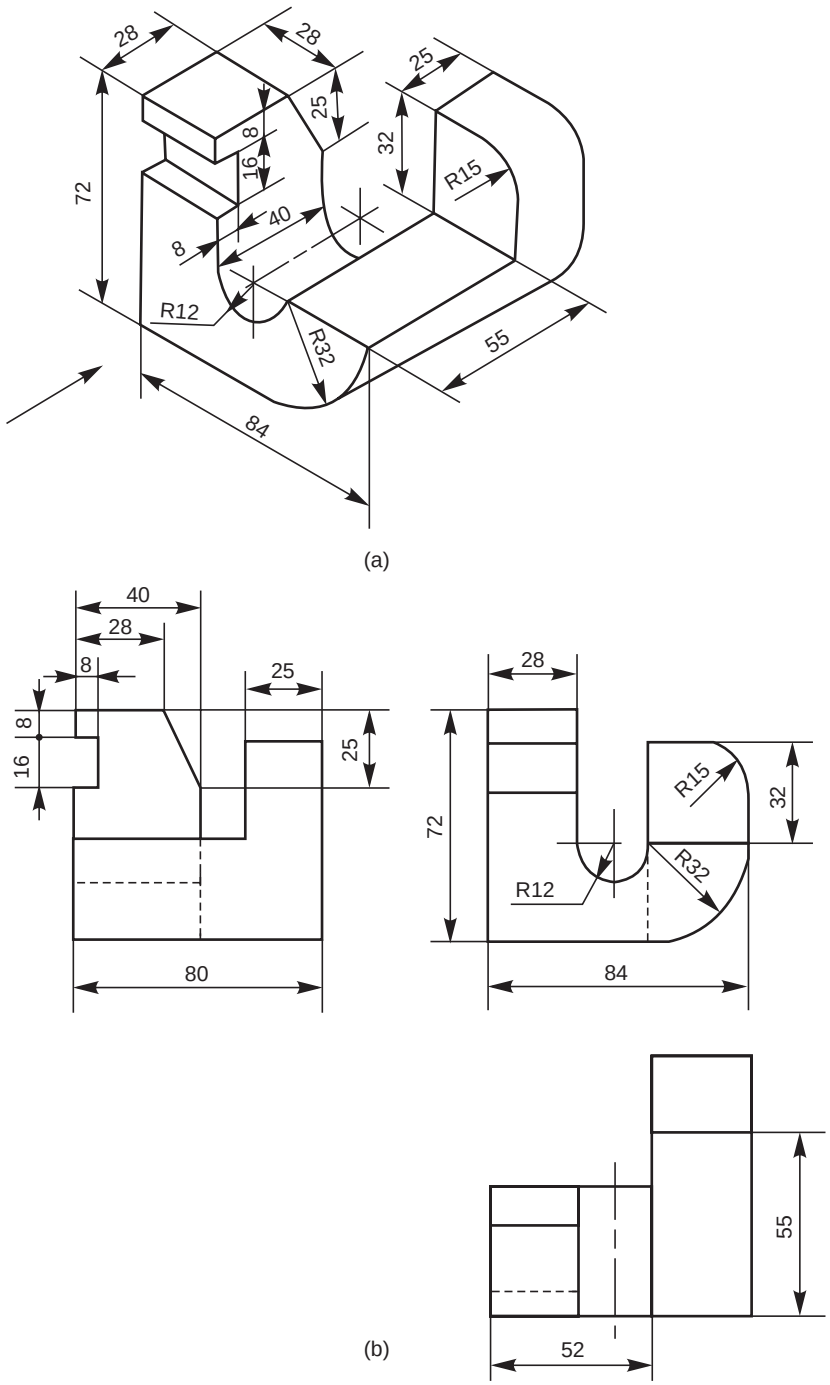

Fig. 3.20

www.EngineeringBooksPdf.com

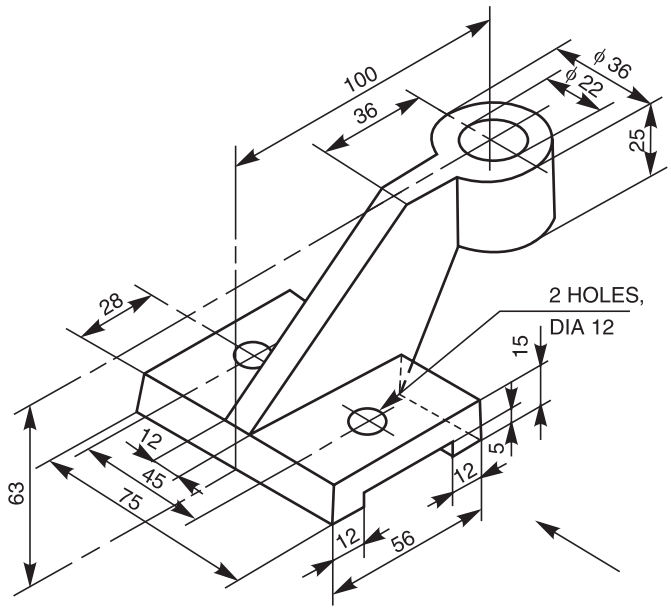

(a)

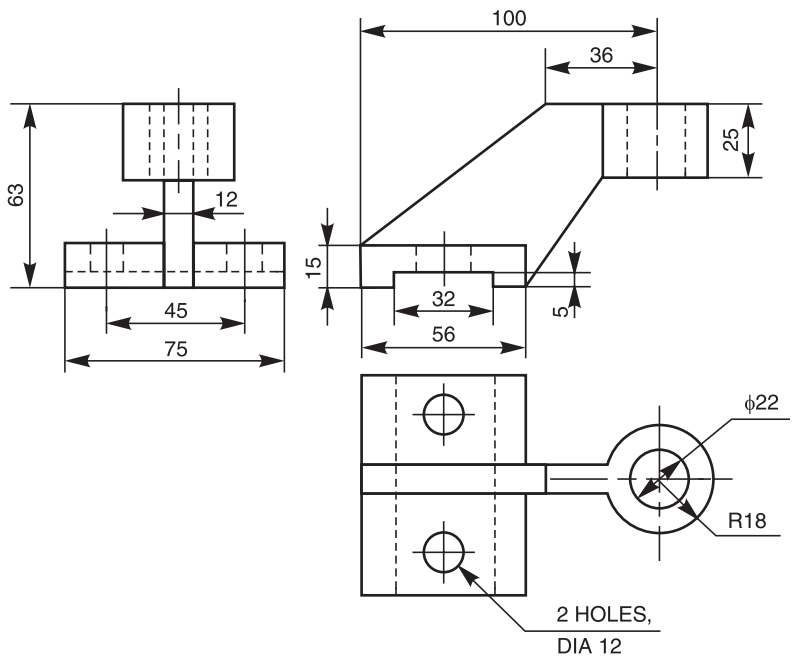

(b)

Fig. 3.21

www.EngineeringBooksPdf.com

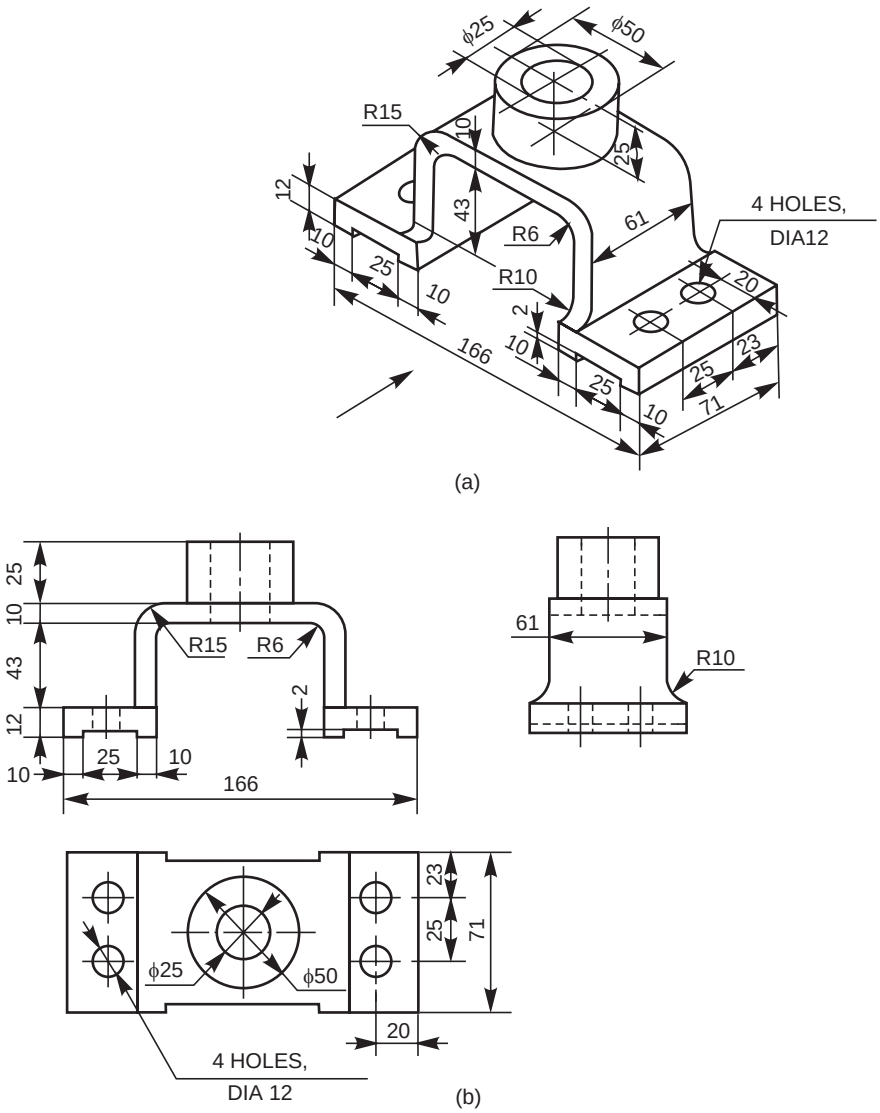

Fig. 3.22

www.EngineeringBooksPdf.com

THEORY QUESTIONS

3.1 What are the elements to be considered while obtaining a projection and what is an orthographic projection ?

3.2 When is a projection of an object called an orthographic projection?

3.3 Explain the following, indicating the symbol to be used in each case:

(*a*) First angle projection, (*b*) Third angle projection

3.4 List-out the six possible orthographic projections that may be obtained for an object in space, specifying their relative positions.

3.5 What is a one-view drawing ? For what type of objects these can be used ?

3.6 What is the basis on which the number of views required for an object is selected ?

3.7 What are the points to be considered while laying-out the different views of an object ?

DRAWING EXERCISES

3.1 Draw (*i*) the view from the front and (*ii*) the view from right of the object shown in Fig. 3.23.

3.2 Draw (*i*) the view from the front, (*ii*) the view from above and (*iii*) the view from the right, of the objects shown in Figs. 3.24, 3.27, 3.28, 3.31 and 3.38.

3.3 Draw (*i*) the view from the front and (*ii*) the view from above of the objects shown in Figs. 3.25, 3.32, 3.34, 3.36 and 3.37.

3.4 Draw (*i*) the view from the front, (*ii*) the view from above and (*iii*) the view from the left of the objects shown in Figs. 3.26, 3.29, 3.30, 3.33 and 3.35.

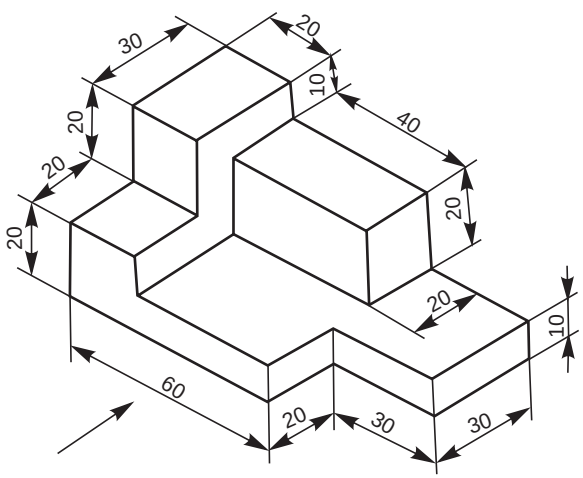

Fig. 3.23

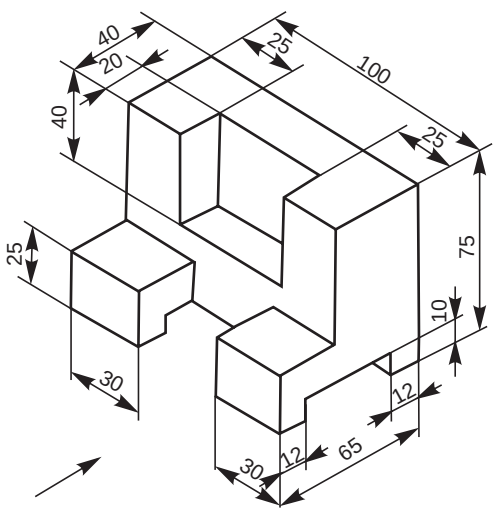

Fig. 3.24

www.EngineeringBooksPdf.com

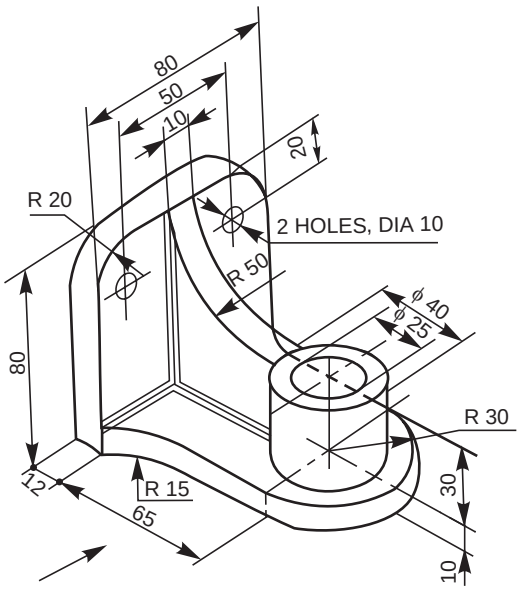

Fig. 3.25

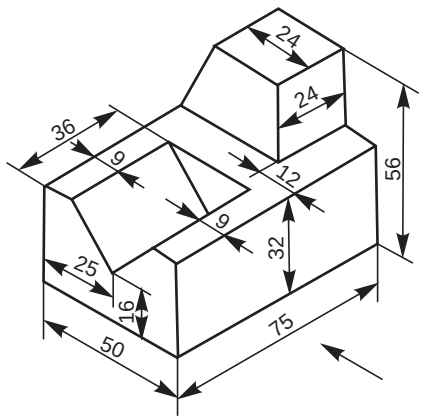

Fig. 3.26

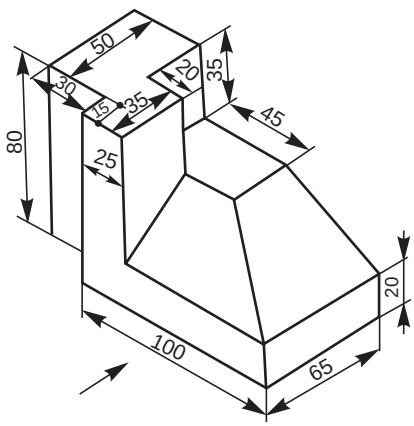

Fig. 3.27

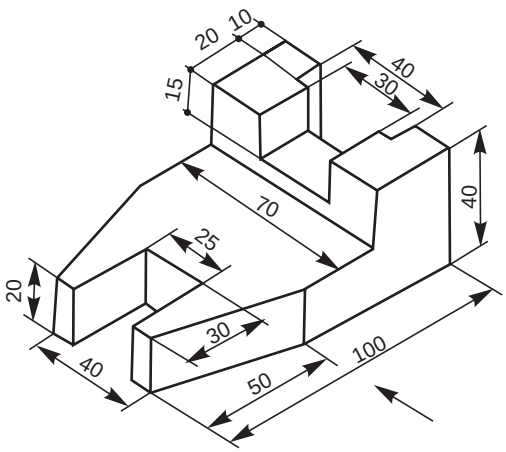

Fig. 3.28

www.EngineeringBooksPdf.com

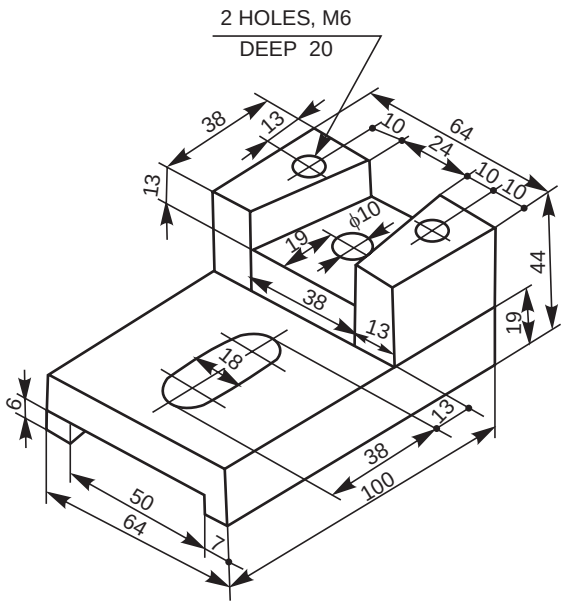

Fig. 3.29

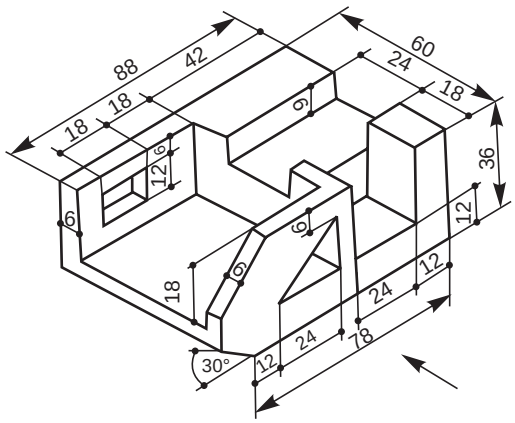

Fig. 3.30

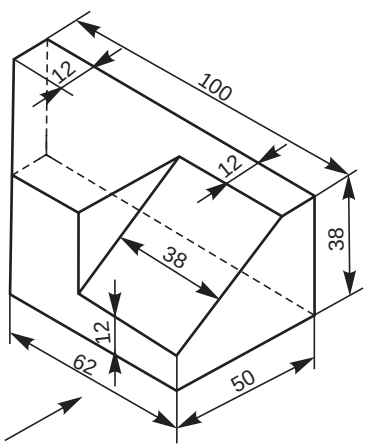

Fig. 3.31

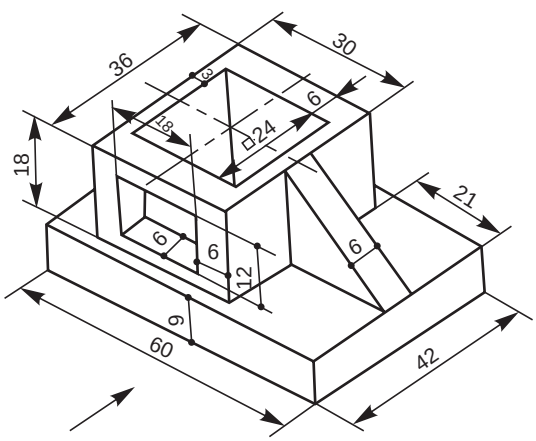

Fig. 3.32

www.EngineeringBooksPdf.com

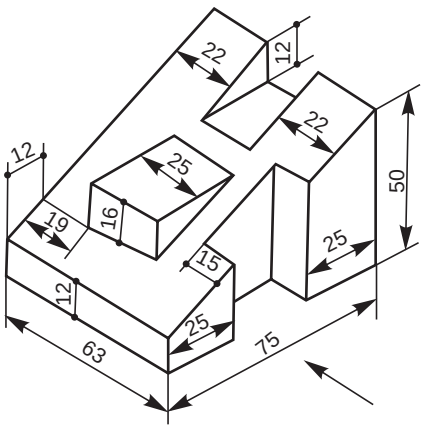

Fig. 3.33

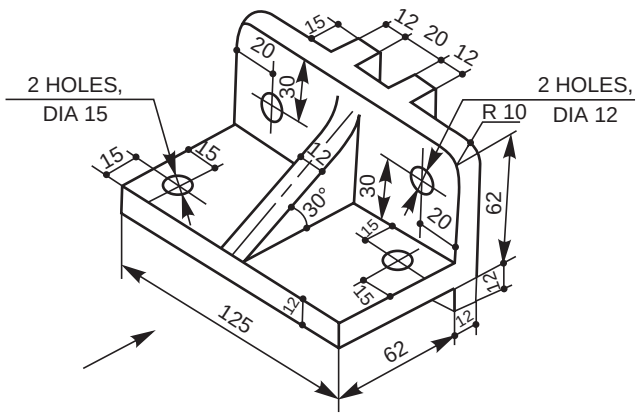

Fig. 3.34

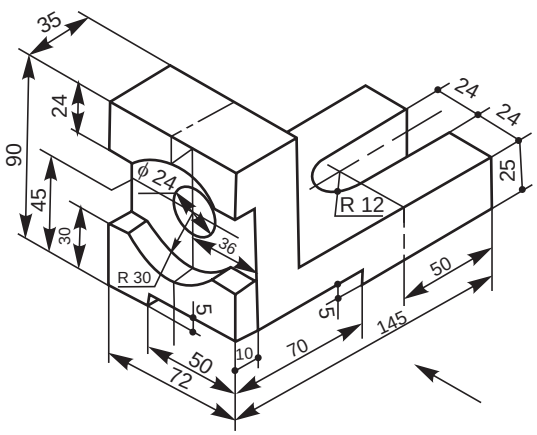

Fig. 3.35

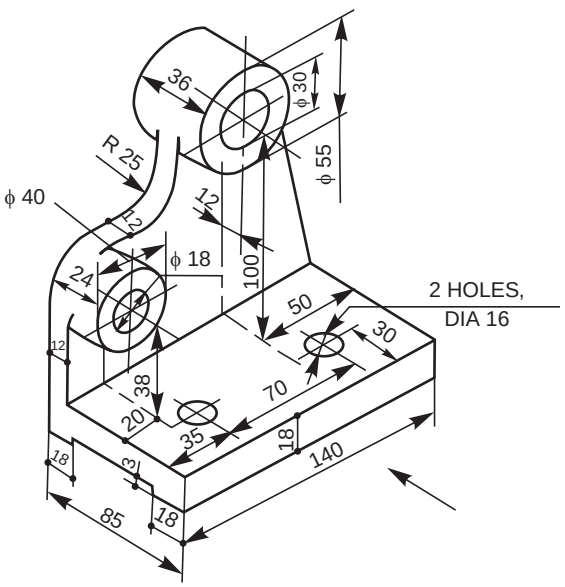

Fig. 3.36

www.EngineeringBooksPdf.com

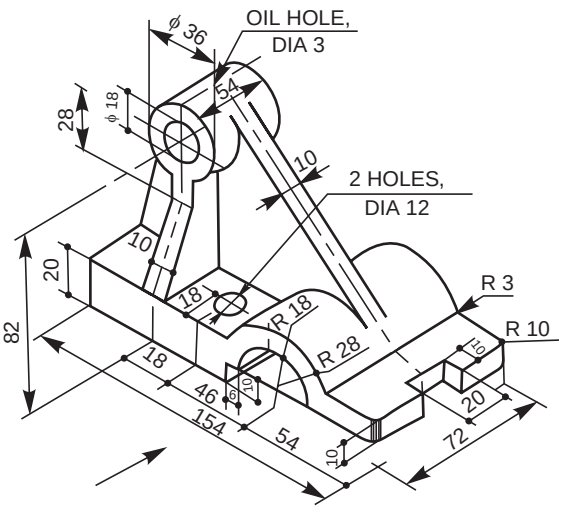

Fig. 3.37

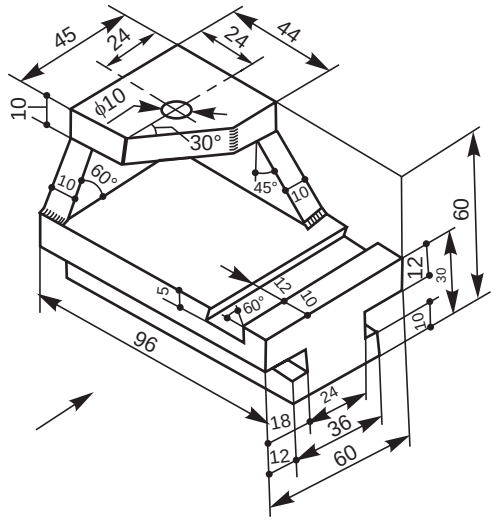

Fig. 3.38

3.5 Draw (*i*) the view from the front, (*ii*) the view from the right and (*iii*) the view from the left of the object shown in Fig. 3.39.

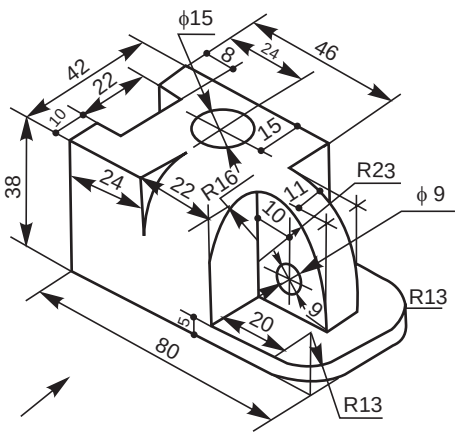

Fig. 3.39

3.6 Draw (*i*) the view from the front and (*ii*) the view from the left of the objects shown in Figs. 3.40, 3.41, 3.42 and 3.43.

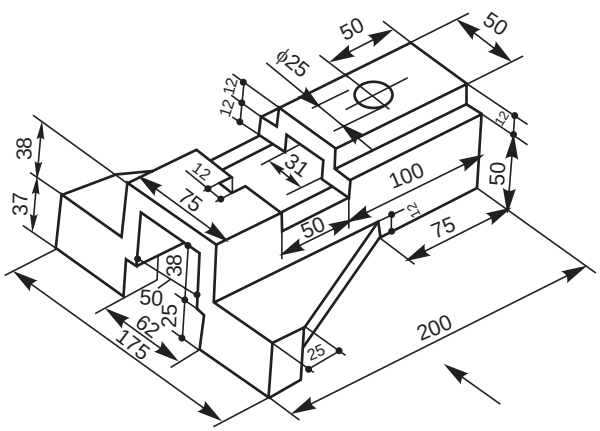

Fig. 3.40

www.EngineeringBooksPdf.com

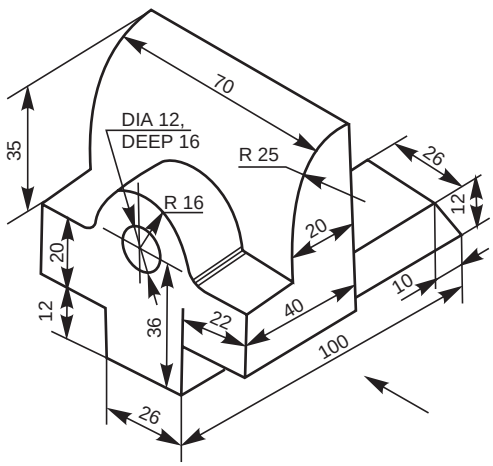

Fig. 3.41

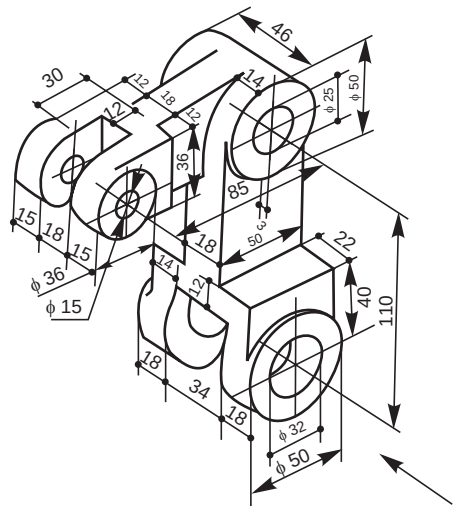

Fig. 3.42

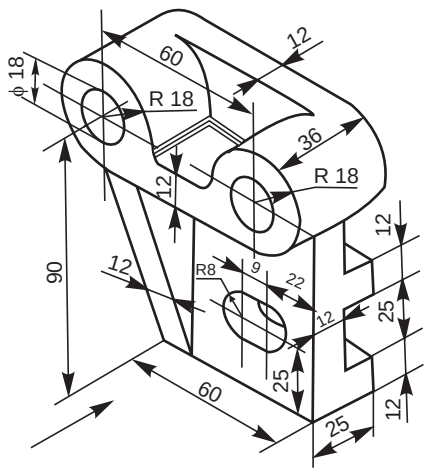

Fig. 3.43

3.7 Isometric views of a few objects are given on the left hand side of Fig. 3.44. The orthographic views are shown on the right side. Name the views.

3.8 Two views of each object are given in Fig. 3.45. Sketch the missing views of the same.

www.EngineeringBooksPdf.com

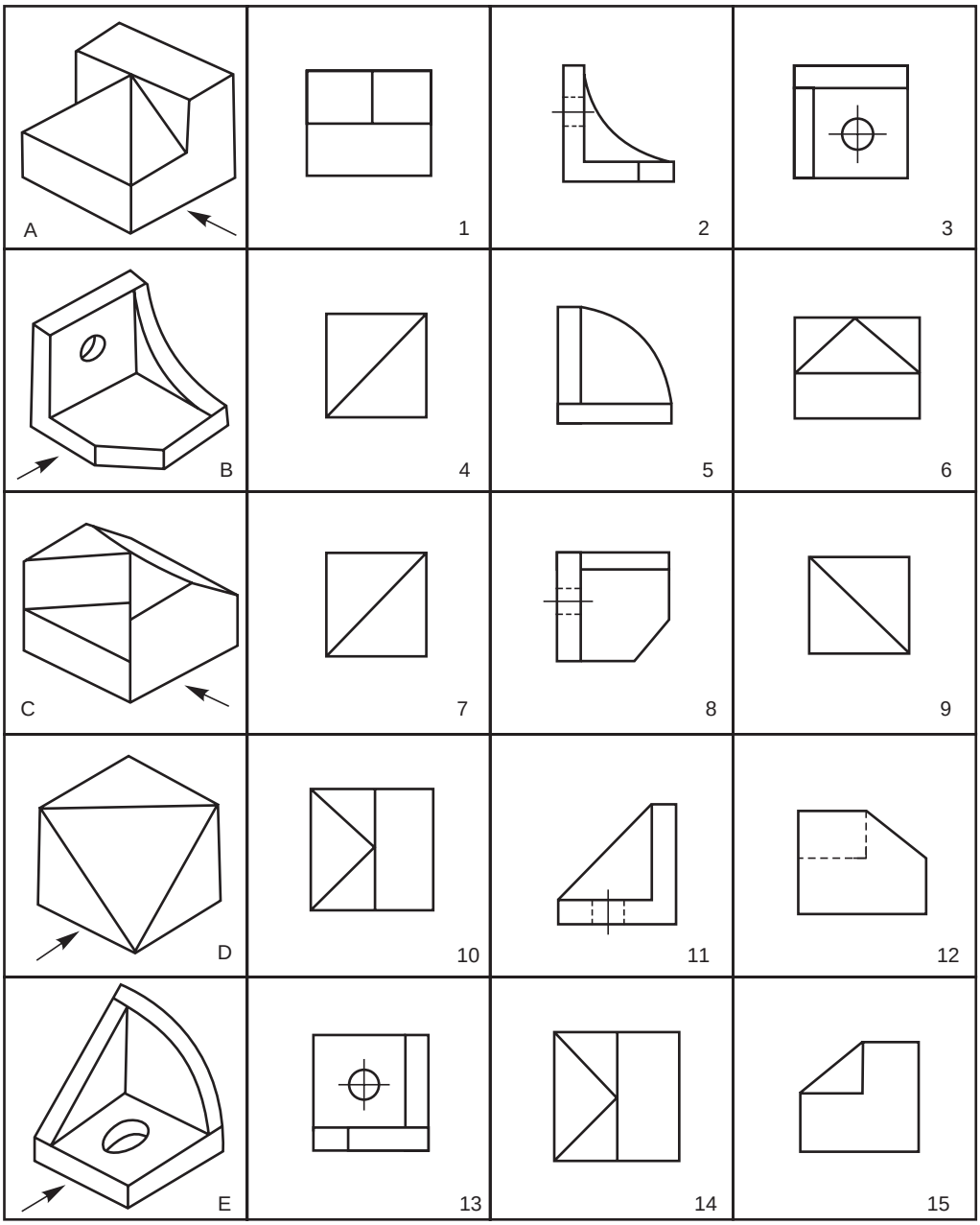

Fig. 3.44 Identification of views

www.EngineeringBooksPdf.com

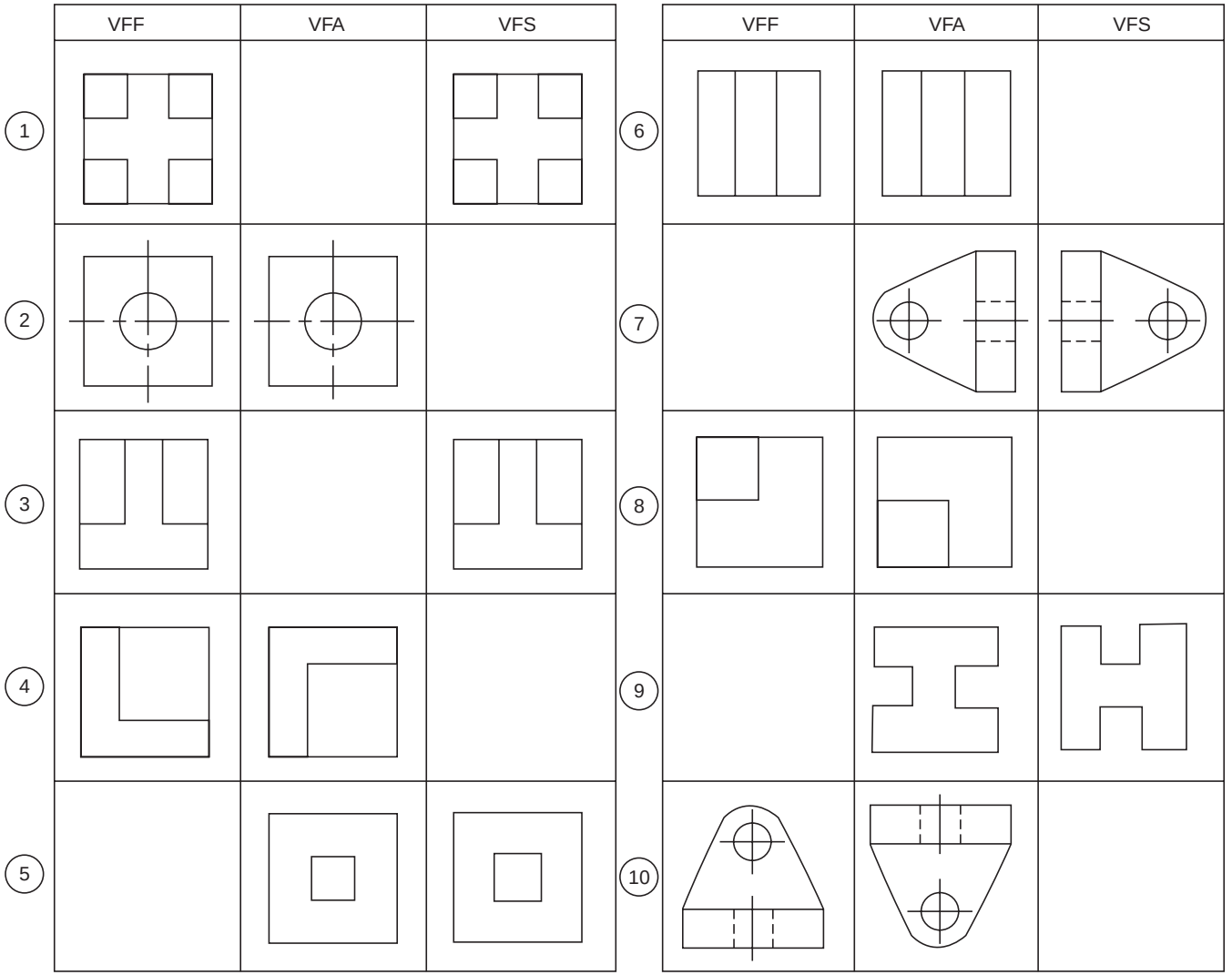

VFF – View from the front VFA – View from above VFS – View from the side (L or R)

Fig. 3.45 Sketching of missing views

www.EngineeringBooksPdf.com

SECTIONAL VIEWS

4

4.1 INTRODUCTION

Orthographic views when carefully selected, may reveal the external features of even the most complicated objects. However, there are objects with complicated interior details and when represented by hidden lines, may not effectively reveal the true interior details. This may be overcome by representing one or more of the views 'in section'.

A sectional view is obtained by imagining the object, as if cut by a cutting plane and the portion between the observer and the section plane being removed. Figure 4.1*a* shows an object, with the cutting plane passing through it and Fig. 4.1*b*, the two halves drawn apart, exposing the interior details.

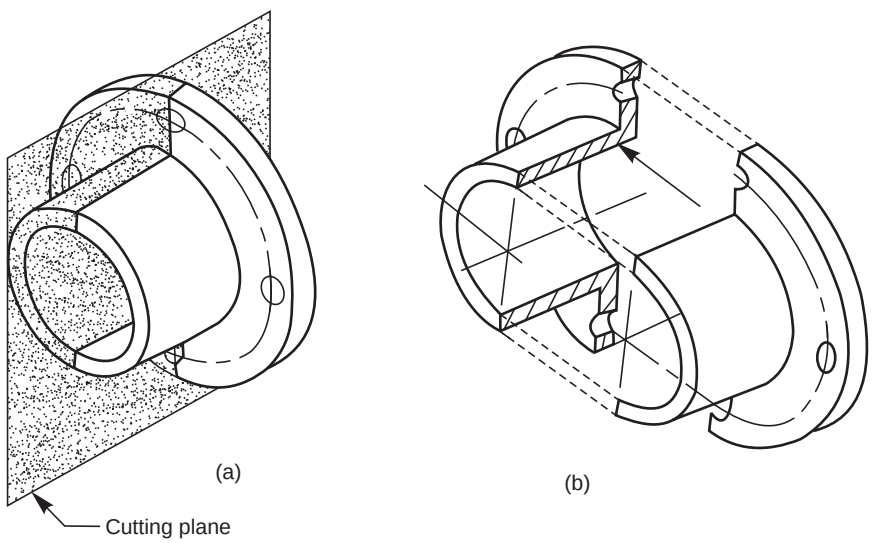

Fig. 4.1 Principles of sectioning

4.2 FULL SECTION

A sectional view obtained by assuming that the object is completely cut by a plane is called a full section or sectional view. Figure 4.2*a* shows the view from the right of the object shown in Fig. 4.1*a*, in full section. The sectioned view provides all the inner details, better than the unsectioned view with dotted lines for inner details (Fig. 4.2*b*). The cutting plane is represented by its trace (V.T) in the view from the front (Fig. 4.2c) and the direction of sight to obtain the sectional view is represented by the arrows.

www.EngineeringBooksPdf.com

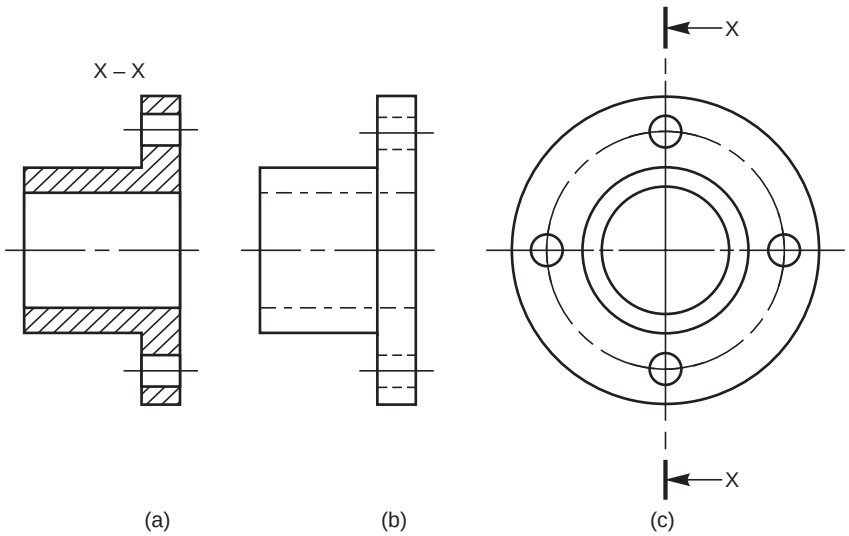

Fig. 4.2 Sectioned and un-sectioned views

It may be noted that, in order to obtain a sectional view, only one half of the object is imagined to be removed, but is not actually shown removed anywhere except in the sectional view. Further, in a sectional view, the portions of the object that have been cut by the plane are represented by section lining or hatching. The view should also contain the visible parts behind the cutting plane.

Figure 4.3 represents the correct and incorrect ways of representing a sectional view. Sections are used primarily to replace hidden line representation, hence, as a rule, hidden lines are omitted in the sectional views.

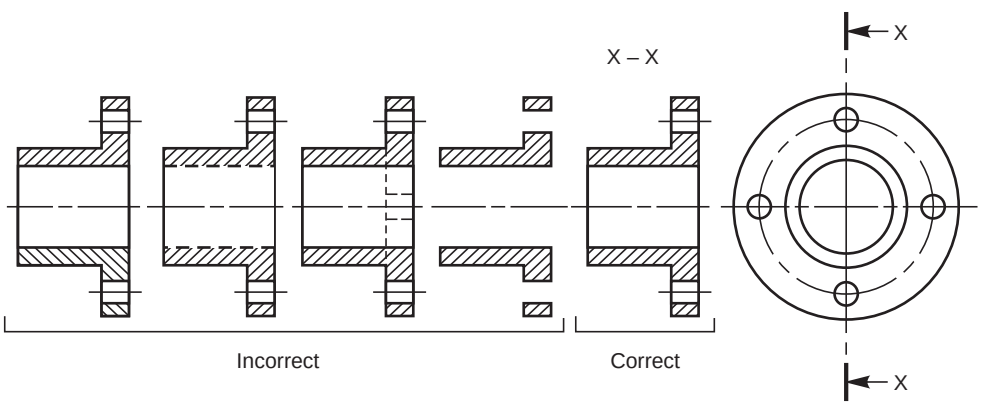

Fig. 4.3 Incorrect and correct sections

4.3 HALF SECTION

A half sectional view is preferred for symmetrical objects. For a half section, the cutting plane removes only one quarter of an object. For a symmetrical object, a half sectional view is used to indicate both interior and exterior details in the same view. Even in half sectional views, it is a good practice to omit the hidden lines. Figure 4.4*a* shows an object with the cutting plane in position for obtaining a half sectional view from the front, the top half being in section. Figure 4.4*b* shows two parts drawn apart, exposing the inner details in the sectioned portion. Figure 4.4*c*

www.EngineeringBooksPdf.com

shows the half sectional view from the front. It may be noted that a centre line is used to separate the halves of the half section. Students are also advised to note the representation of the cutting plane in the view from above, for obtaining the half sectional view from the front.

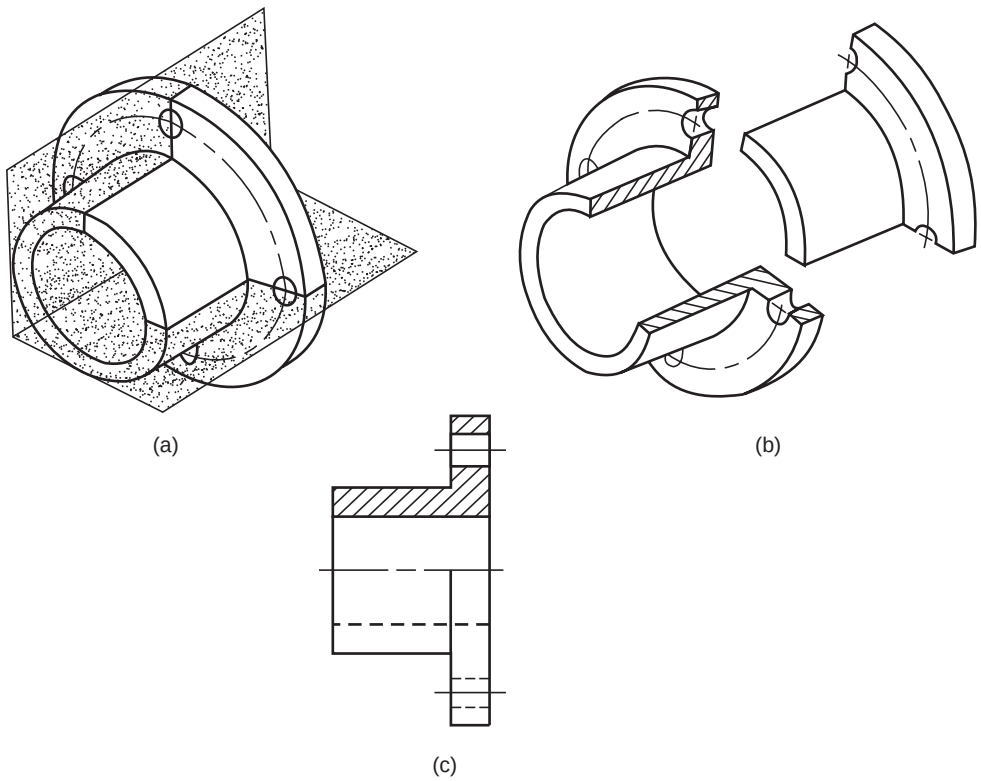

Fig. 4.4 Method of obtaining half sectional view

4.4 AUXILIARY SECTIONS

Auxiliary sections may be used to supplement the principal views used in orthographic projections. A sectional view projected on an auxiliary plane, inclined to the principal planes of projection, shows the cross-sectional shapes of features such as arms, ribs and so on. In Fig. 4.5, auxiliary cutting plane X-X is used to obtain the auxiliary section X-X.

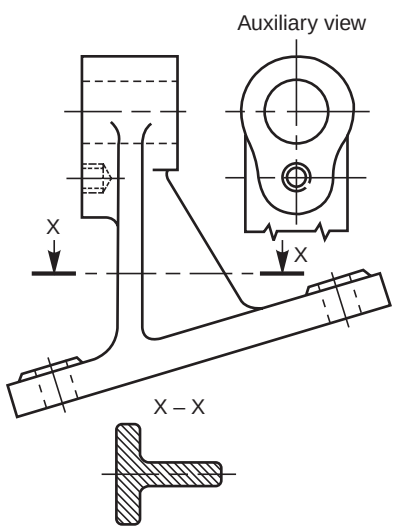

Fig. 4.5 Auxiliary section

www.EngineeringBooksPdf.com

4.5 EXAMPLES

4.1 Figure 4.6 shows the isometric view of a machine block and (*i*) the sectional view from the front, (*ii*) the view from above and (*iii*) the sectional view from the left.

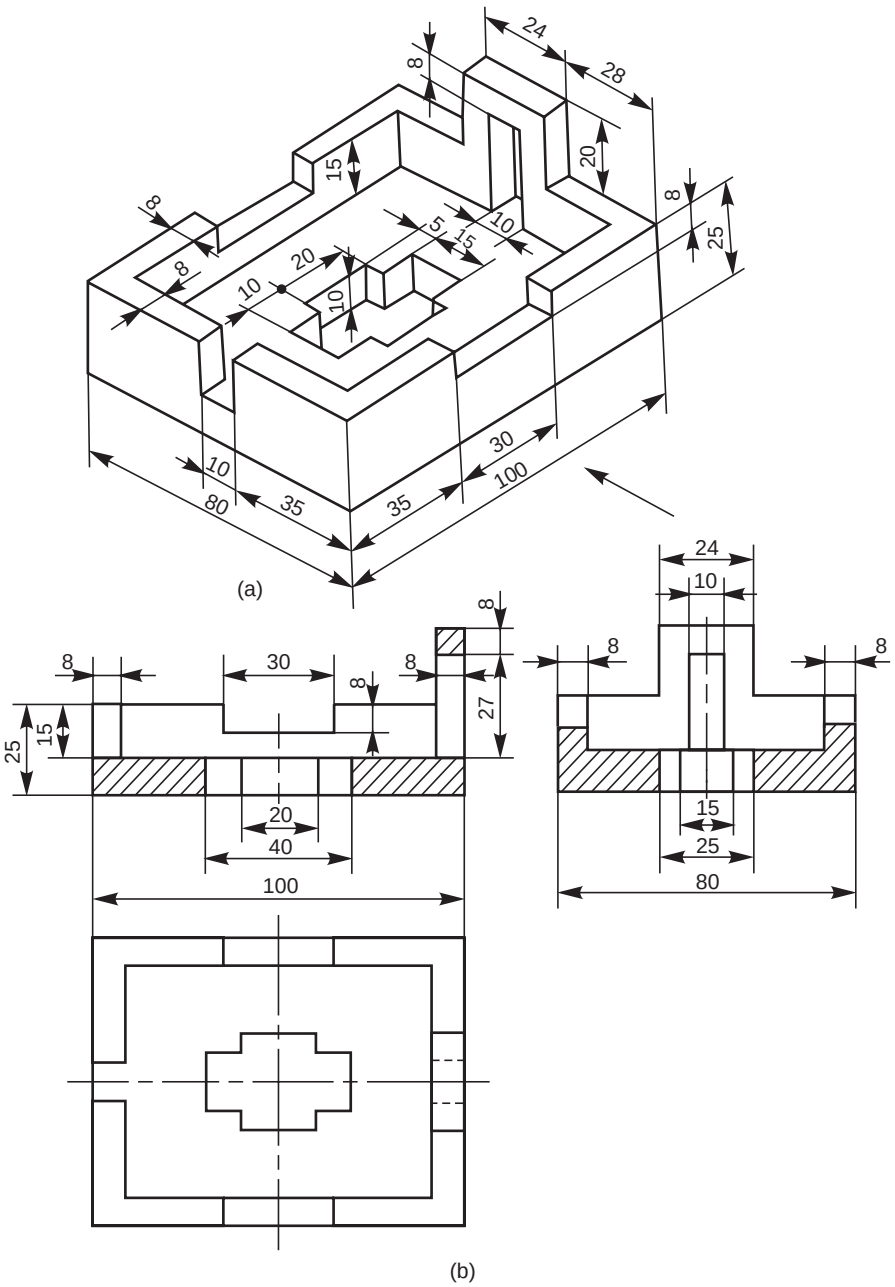

Fig. 4.6 Machine block

www.EngineeringBooksPdf.com

4.2 Figure 4.7 shows the isometric view of a shaft support. Sectional view from the front, the view from above and the view from the right are also shown in the figure.

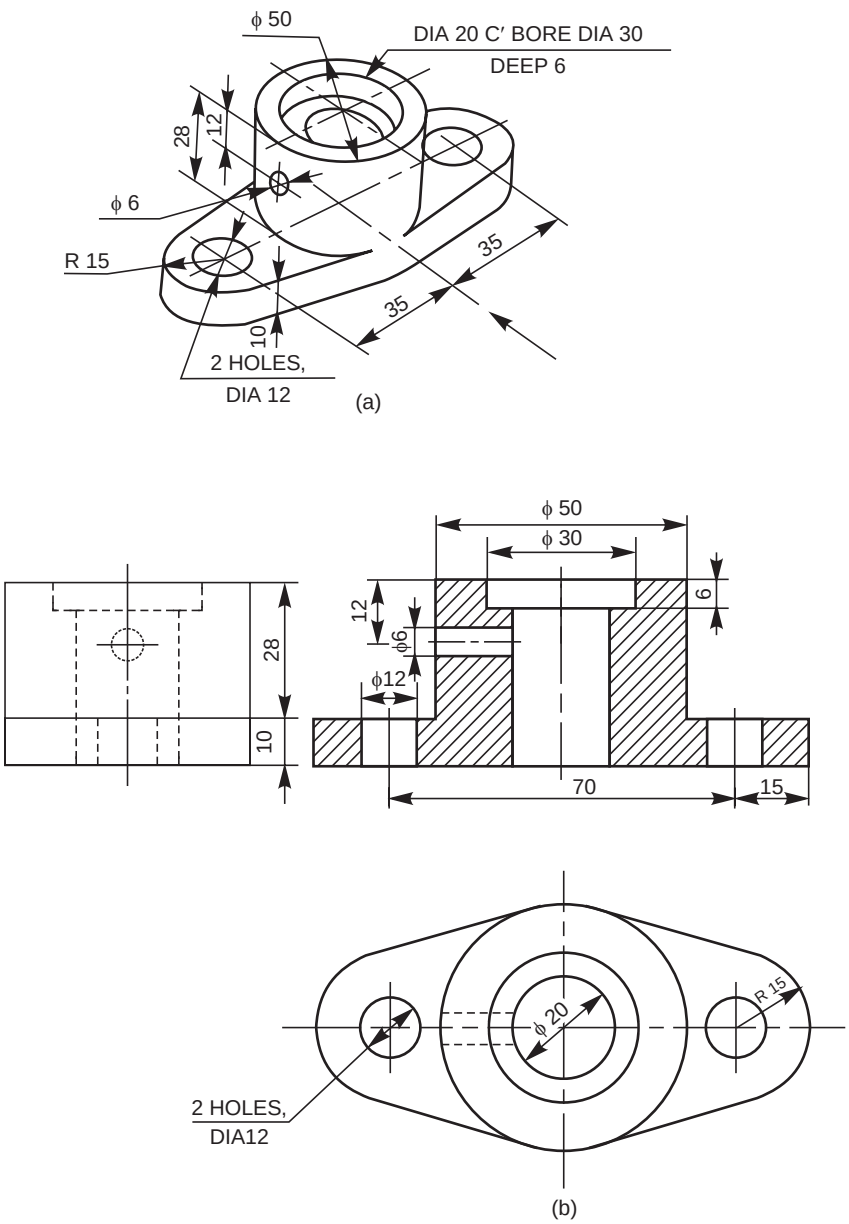

Fig. 4.7 Shaft support

4.3 Figure 4.8 shows the isometric view of a machine component along with the sectional view from the front, the view from above and the view from the left.

4.4 Figure 4.9 shows a sliding block and (*i*) the view from the front, (*ii*) the view from above and (*iii*) the sectional view from the right.

www.EngineeringBooksPdf.com

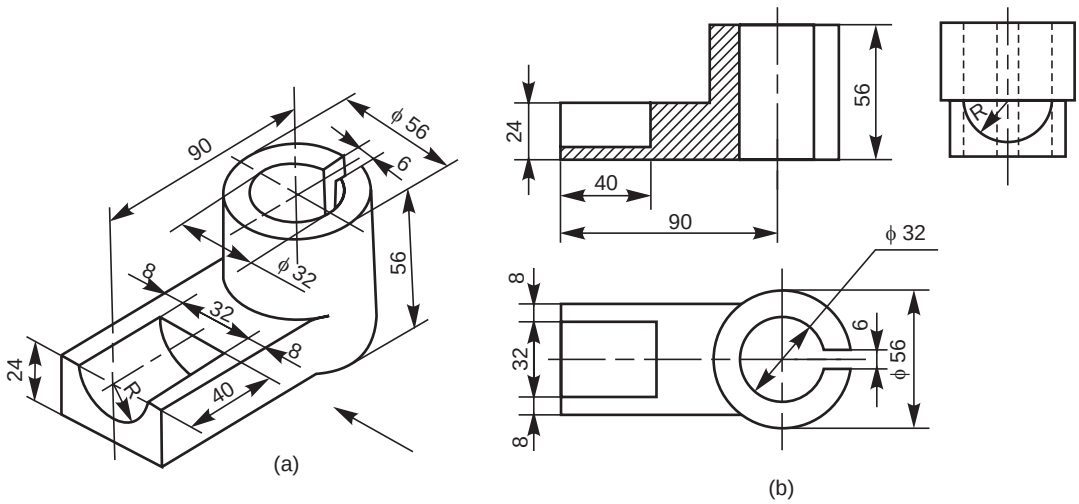

Fig. 4.8 Machine component

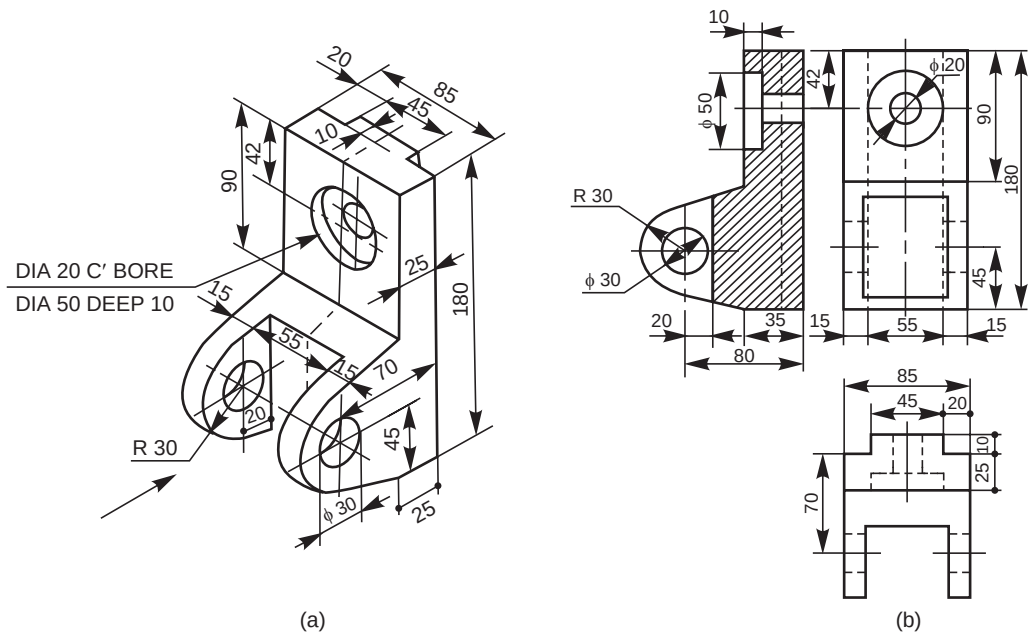

Fig. 4.9 Sliding block

4.5 Figure 4.10 shows the orthographic views of a yoke. The figure also shows the sectional view from the front, the sectional view from the right and the view from above.

4.6 Figure 4.11 shows the orthographic views of a bearing bracket. The sectional view from the right and view from above are developed and shown in the figure.

www.EngineeringBooksPdf.com

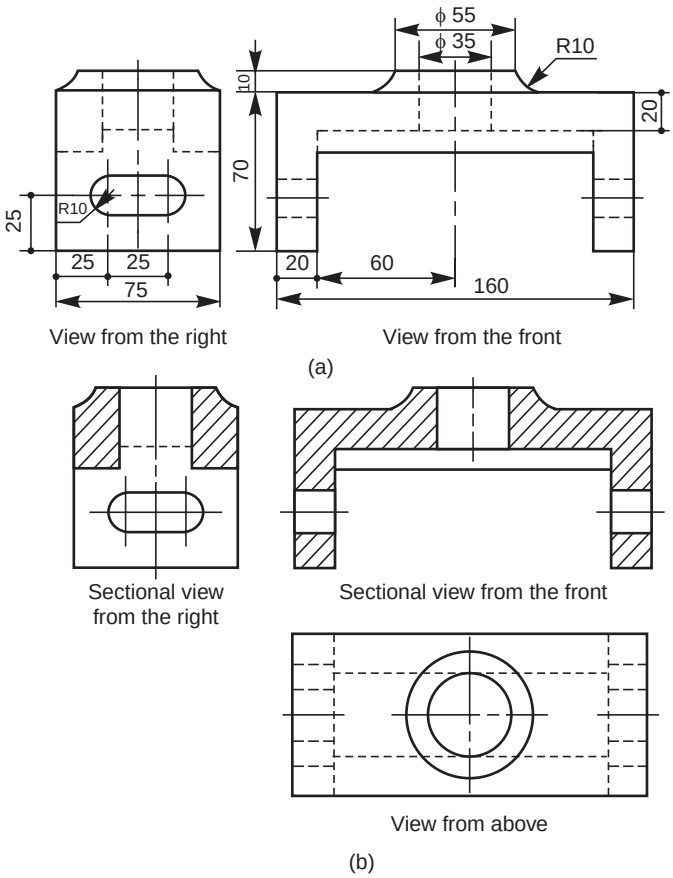

Fig. 4.10 Yoke

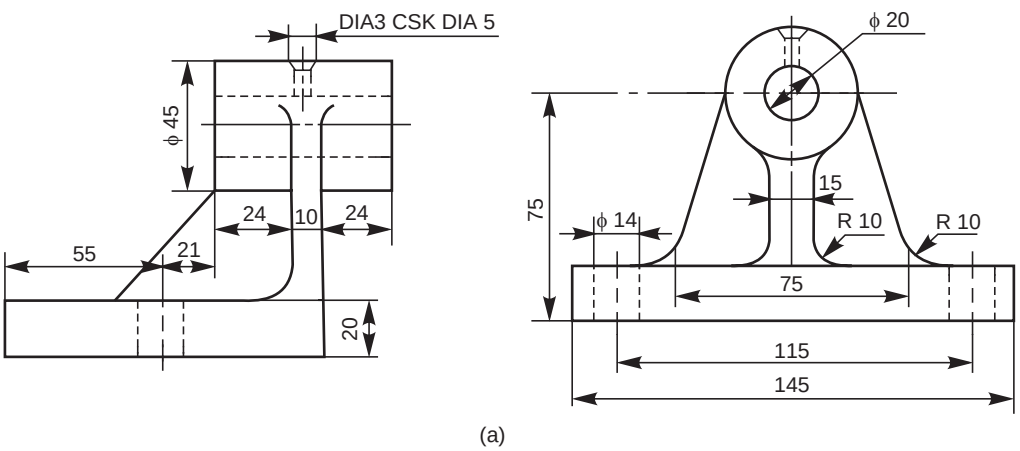

Fig. 4.11 Bearing bracket (*Contd.*)

www.EngineeringBooksPdf.com

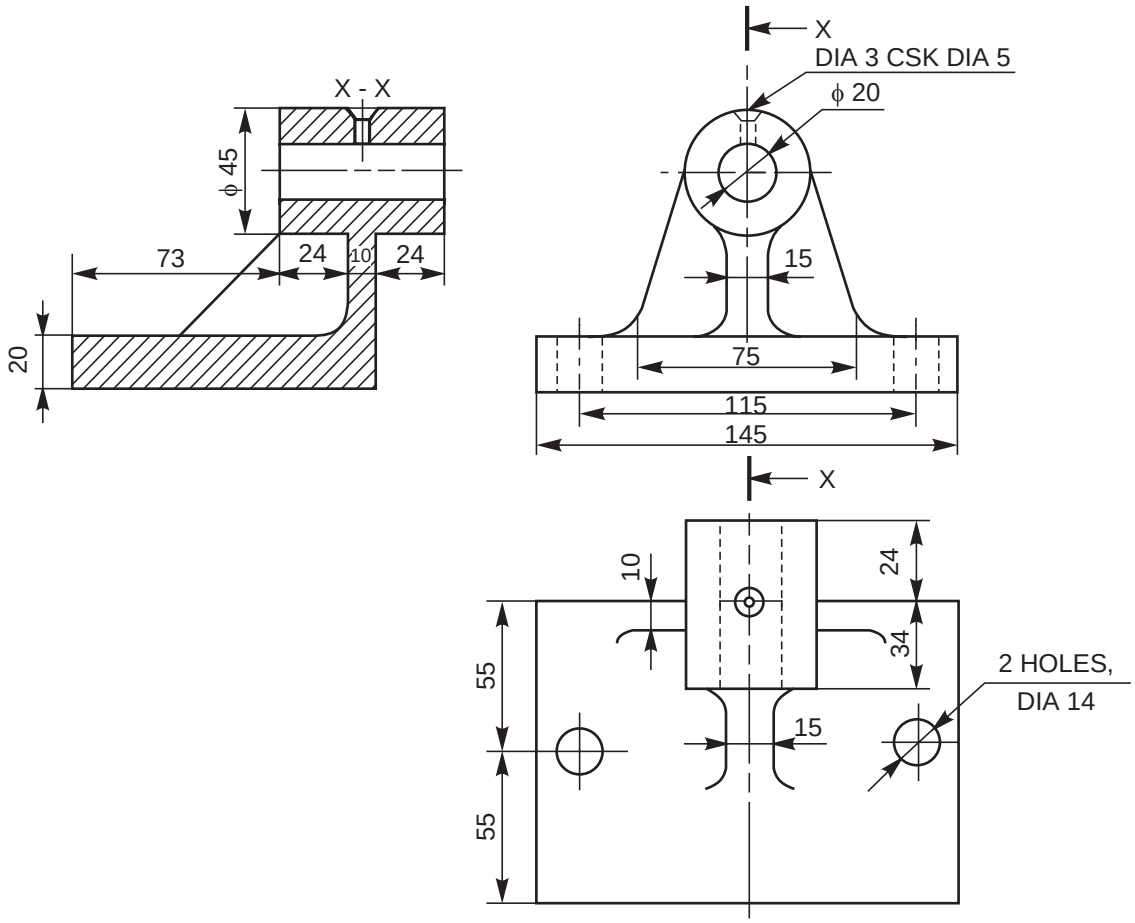

(b)

Fig. 4.11 Bearing bracket

THEORY QUESTIONS

4.1 Under what conditions, a sectional view is preferred ?

4.2 Describe the different types of sectional views. Explain each one of them by a suitable example.

4.3 What is a full section ?

4.4 What is a half section ?

4.5 How is a cutting plane represented in the orthographic views for obtaining, (*a*) full section and (*b*) half section ?

4.6 What is an auxiliary section and when is it used ?

DRAWING EXERCISES

4.1 Draw (*i*) sectional view from the front, (*ii*) the view from above and (*iii*) the view from the right of the vice body shown in Fig. 4.12.

4.2 Draw (*i*) the sectional view from the front and (*ii*) the view from the left of the sliding support, shown in Fig. 4.13.

www.EngineeringBooksPdf.com

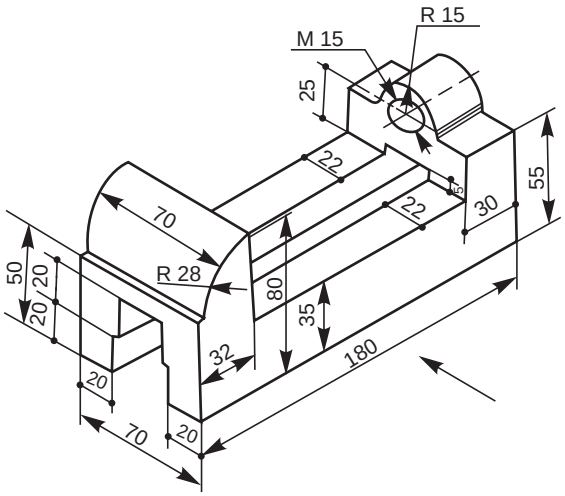

Fig. 4.12 Vice body

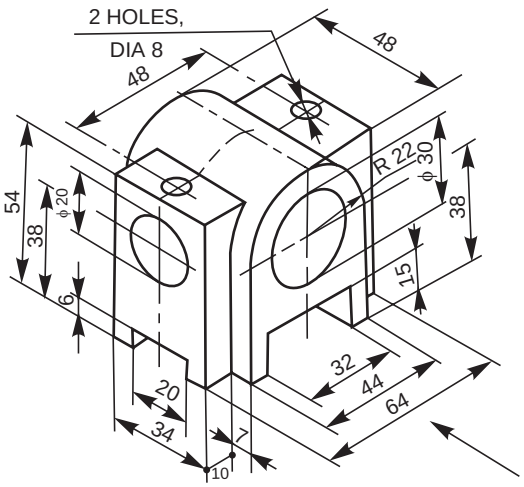

Fig. 4.13 Sliding support

4.3 Draw (*i*) the sectional view from the front, (*ii*) the view from above and (*iii*) the view from right of the shaft bracket shown in Fig. 4.14.

4.4 Draw (*i*) the sectional view from the front, (*ii*) the view from above and (*iii*) the view from the left and (*iv*) the view from the right of an anchor bracket shown in Fig. 4.15.

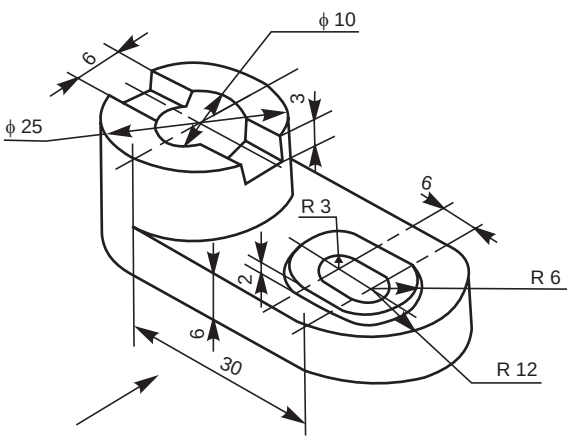

Fig. 4.14 Shaft bracket

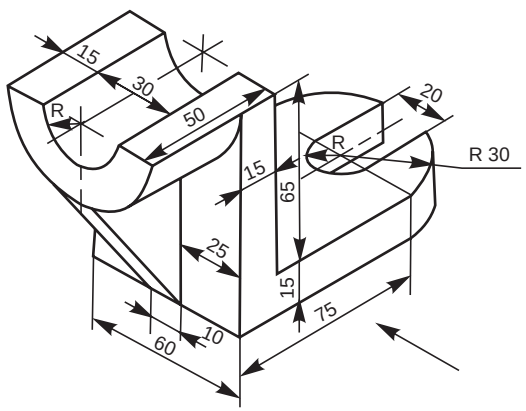

Fig. 4.15 Anchor bracket

4.5 Draw (*i*) the sectional view from the front, (*ii*) the view from above and (*iii*) the view from the left of a fork shown in Fig. 4.16.

4.6 Draw (*i*) the view from the front, (*ii*) sectional view from above and (*iii*) the view from the right of a depth stop shown in Fig. 4.17.

4.7 Draw (*i*) the view from the front, (*ii*) the view from above and (*iii*) the sectional view from the left of a centering bearing shown in Fig. 4.18.

4.8 Draw (*i*) the view from the front and (*ii*) the sectional view from above of a flange connector shown in Fig. 4.19.

4.9 Draw (*i*) the sectional view from the front and (*ii*) the view from above of a bearing bracket shown in Fig. 4.20.

www.EngineeringBooksPdf.com

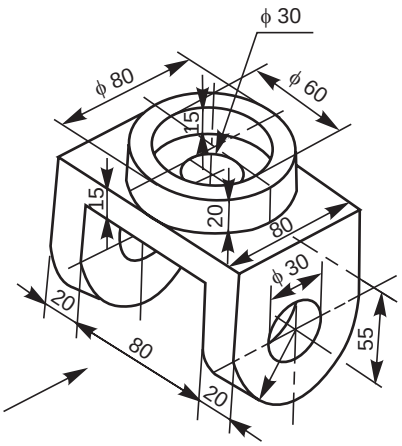

Fig. 4.16 Fork

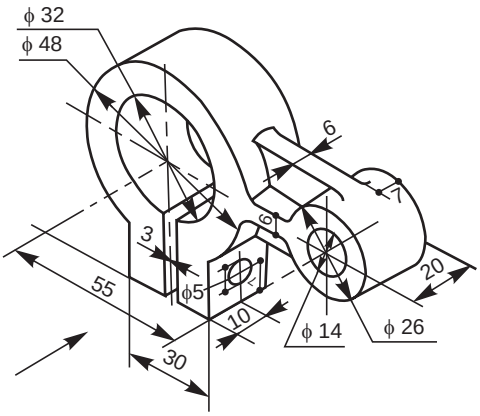

Fig. 4.17 Depth stop

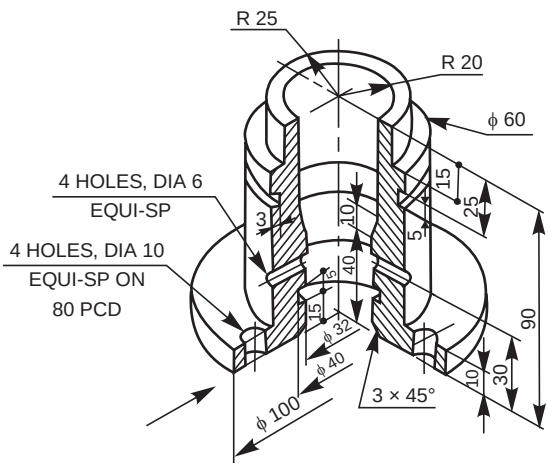

Fig. 4.18 Centering bearing

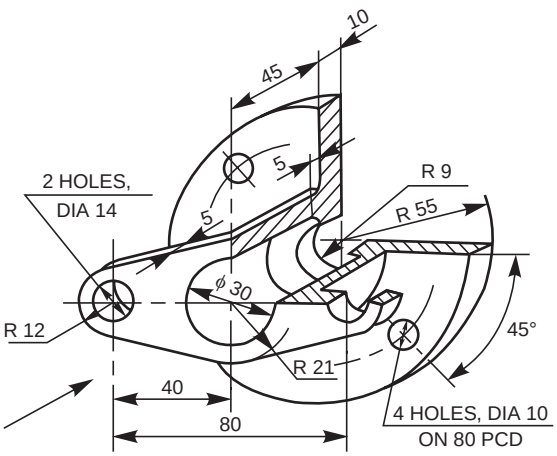

Fig. 4.19 Flange connector

4.10 Draw (*i*) the sectional view from the front and (*ii*) the view from the left of a shaft support shown in Fig. 4.21.

4.11 Draw (*i*) the sectional view from the front, (*ii*) the view from above and (*iii*) the view from the left of a motor bracket shown in Fig. 4.22.

4.12 Draw (*i*) the sectional view from the front, (*ii*) the view from above and (*iii*) the view from the left of a machine block shown in Fig. 3.35.

4.13 Draw (*i*) the sectional view from the front, (*ii*) the view from above and (*iii*) the view from the right of a shaft support shown in Fig. 3.37.

4.14 Draw (*i*) the sectional view from the front, (*ii*) the view from above and (*iii*) the view from the left of a sliding block shown in Fig. 3.40.

4.15 Draw (*i*) the sectional view from the front, (*ii*) the view from above and (*iii*) the view from the left of a vice body shown in Fig. 3.41.

4.16 Develop the sectional view from left, from the orthographic views of a sliding bracket given in Fig. 4.23.

www.EngineeringBooksPdf.com

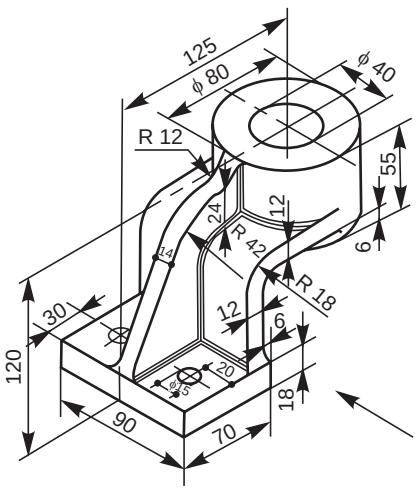

Fig. 4.20 Bearing bracket

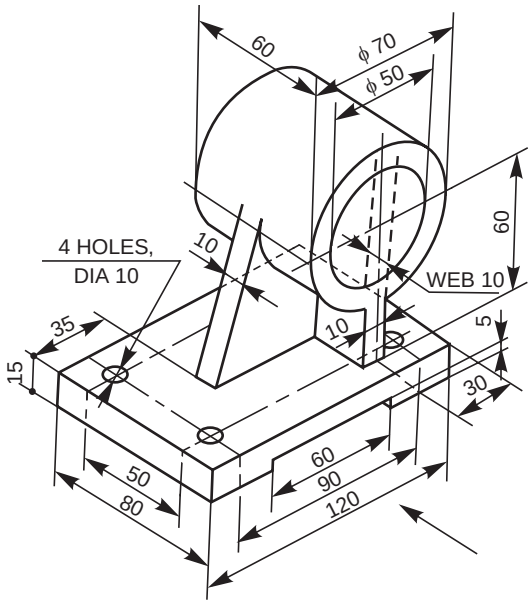

Fig. 4.21 Shaft support

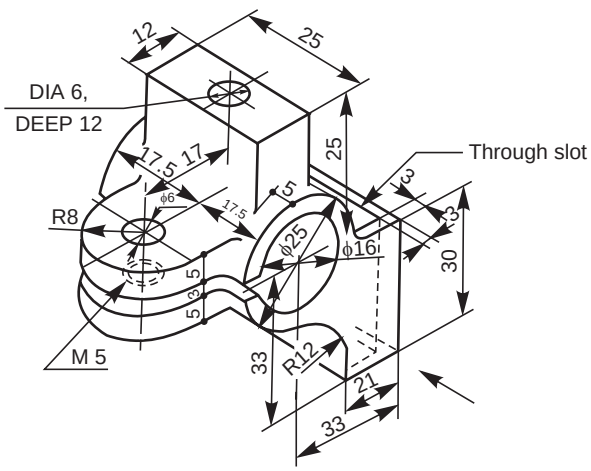

Fig. 4.22 Motor bracket

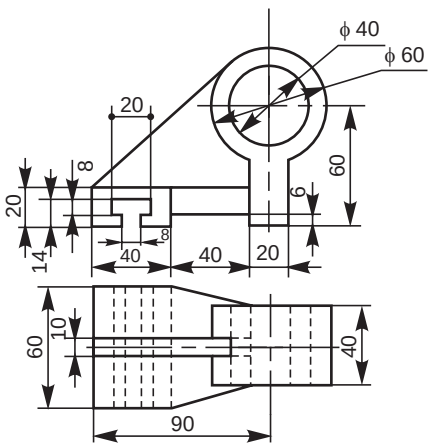

Fig. 4.23 Sliding bracket

4.17 Develop the sectional view from left, from the orthographic views of a shaft bearing given in Fig. 4.24.

4.18 Develop the sectional view from the front of the shifter, from the orthographic views shown in Fig. 4.25.

4.19 Develop (*i*) the sectional view from above and (*ii*) the view from the left of shaft bracket, from the orthographic views shown in Fig. 4.26.

4.20 Develop the sectional view from the left of a hanger, from the orthographic views shown in Fig. 4.27.

www.EngineeringBooksPdf.com

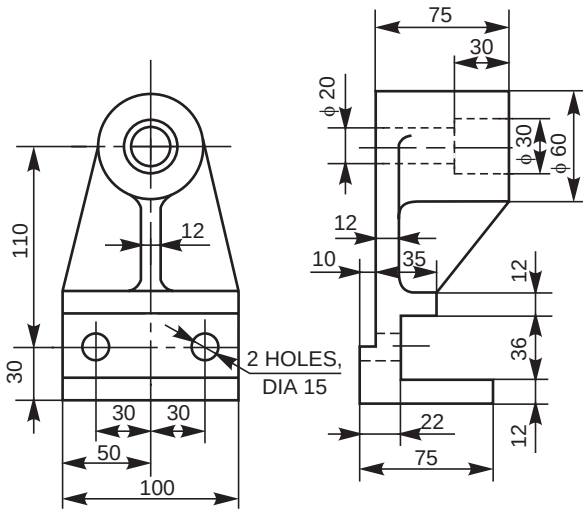

Fig. 4.24 Shaft bearing

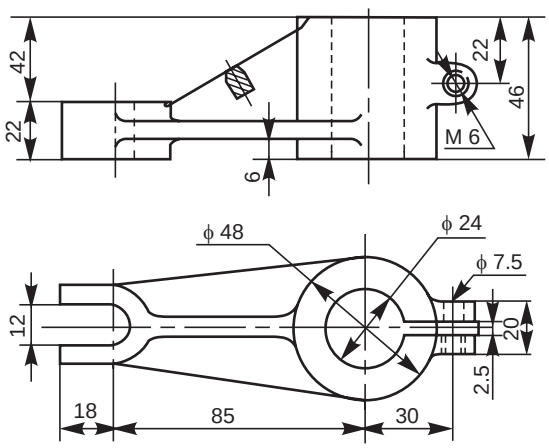

Fig. 4.25 Shifter

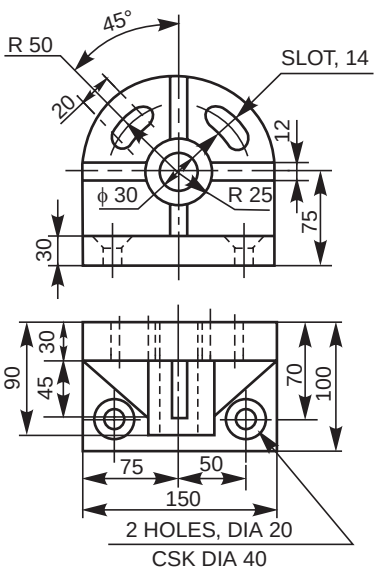

Fig. 4.26 Shaft bracket

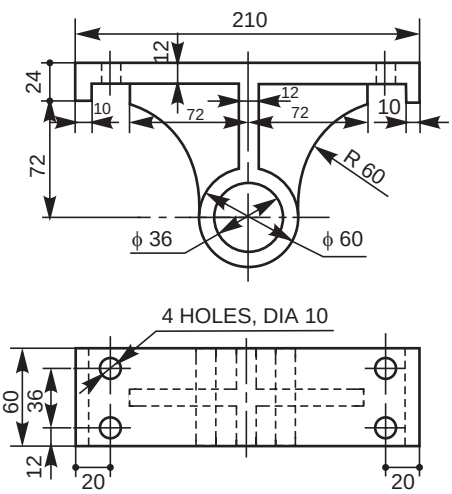

Fig. 4.27 Hanger

www.EngineeringBooksPdf.com

4.21 Develop (*i*) the view from above and (*ii*) the sectional view from the left of a lever, from the orthographic views shown in Fig. 4.28.

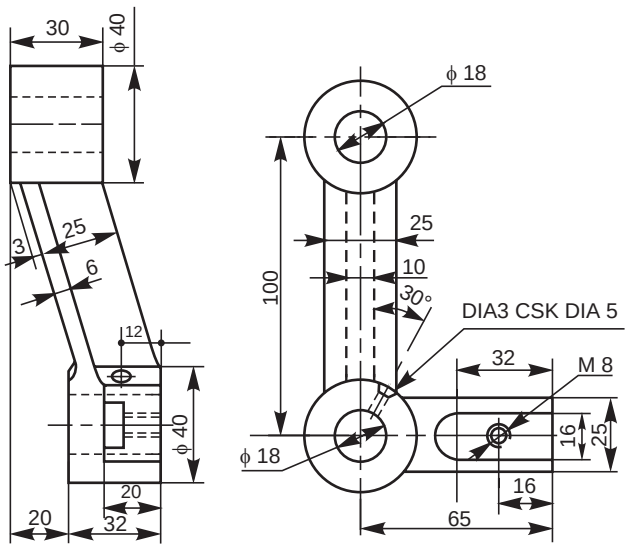

Fig. 4.28 Lever

www.EngineeringBooksPdf.com

SCREWED FASTENERS

5

5.1 INTRODUCTION

A machine element used for holding or joining two or more parts of a machine or structure is known as a fastener. The process of joining the parts is called fastening. The fasteners are of two types : permanent and removable (temporary). Riveting and welding processes are used for fastening permanently. Screwed fasteners such as bolts, studs and nuts in combination, machine screws, set screws, etc., and keys, cotters, couplings, etc., are used for fastening components that require frequent assembly and dissembly.

Screwed fasteners occupy the most prominent place among the removable fasteners. In general, screwed fasteners are used : (*i*) to hold parts together, (*ii*) to adjust parts with reference to each other and (*iii*) to transmit power.

5.2 SCREW THREAD NOMENCLATURE

A screw thread is obtained by cutting a continuous helical groove on a cylindrical surface (external thread). The threaded portion engages with a corresponding threaded hole (internal thread); forming a screwed fastener. Following are the terms that are associated with screw threads (Fig. 5.1).

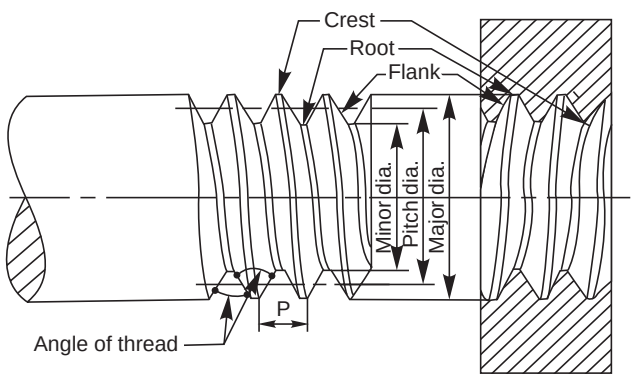

Fig. 5.1 Screw thread nomenclature

1. Major (nominal) diameter

This is the largest diameter of a screw thread, touching the crests on an external thread or the roots of an internal thread.

2. Minor (core) diameter

This is the smallest diameter of a screw thread, touching the roots or core of an external thread (root or core diameter) or the crests of an internal thread.

www.EngineeringBooksPdf.com

3. Pitch diameter

This is the diameter of an imaginary cylinder, passing through the threads at the points where the thread width is equal to the space between the threads.

4. Pitch

It is the distance measured parallel to the axis, between corresponding points on adjacent screw threads.

5. Lead

It is the distance a screw advances axially in one turn.

6. Flank

Flank is the straight portion of the surface, on either side of the screw thread.

7. Crest

It is the peak edge of a screw thread, that connects the adjacent flanks at the top.

8. Root

It is the bottom edge of the thread that connects the adjacent flanks at the bottom.

9. Thread angle

This is the angle included between the flanks of the thread, measured in an axial plane.

5.3 FORMS OF THREADS

Bureau of Indian Standards (BIS) adapts ISO (International Organisation for Standards) metric threads which are adapted by a number of countries apart from India.

The design profiles of external and internal threads are shown in Fig. 5.2. The following are the relations between the various parameters marked in the figure :

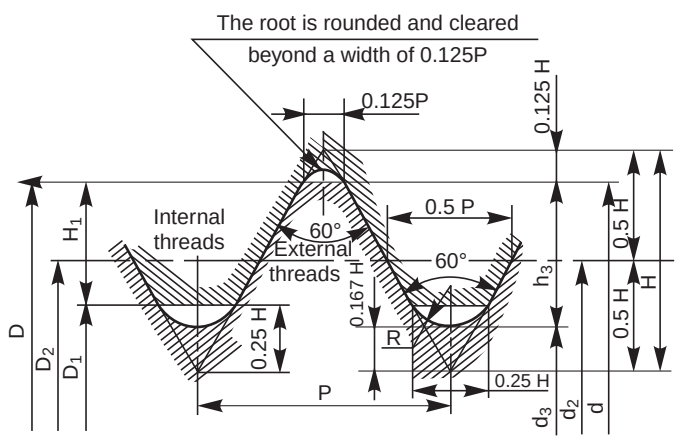

Internal thread diameters
D - Major diameter
D_2 - Pitch diameter
D_1 - Minor diameter

External thread diameters
d - Major diameter
d_2 - Pitch diameter
d_3 - Minor diameter

Fig. 5.2 Metric screw thread

P = Pitch

H = 0.86 P

D = d = Major diameter

$D_2 = d_2 = d - 0.75H$

$D_1 = d_2 - 2(H/2 - H/4) = d - 2H_1$

$d_3 = d_2 - 2\,(H/2 - H/6)$

$= d - 1.22P$

$H_1 = (D - D_1)/2 = 5H/8 = 0.54P$

$h_3 = (d - d_3)/2 = 17/24H = 0.61P$

$R = H/6 = 0.14P$

www.EngineeringBooksPdf.com

$= d - 1.08P$

It may be noted from the figure that in order to avoid sharp corners, the basic profile is rounded at the root (minor diameter) of the design profile of an external thread. Similarly, in the case of internal thread, rounding is done at the root (major diameter) of the design profile.

5.3.1 Other Thread Profiles

Apart from ISO metric screw thread profile, there are other profiles in use to meet various applications. These profiles are shown in Fig. 5.3, the characteristics and applications of which are discussed below :

5.3.1.1 V-Thread (sharp)

This thread profile has a larger contact area, providing more frictional resistance to motion. Hence, it is used where effective positioning is required. It is also used in brass pipe work.

5.3.1.2 British Standard Whitworth (B.S.W) Thread

This thread form is adopted in Britain in inch units. The profile has rounded ends, making it less liable to damage than sharp V-thread.

5.3.1.3 Buttress Thread

This thread is a combination of V-and square threads. It exhibits the advantages of square thread, like the ability to transmit power and low frictional resistance, with the strength of the V-thread. It is used where power transmission takes place in one direction only such as screw press, quick acting carpenter's vice, etc.

5.3.1.4 Square Thread

Square thread is an ideal thread form for power transmission. In this, as the thread flank is at right angle to the axis, the normal force between the threads, acts parallel to the axis, with zero radial component. This enables the nut to transmit very high pressures, as in the case of a screw jack and other similar applications.

5.3.1.5 ACME Thread

It is a modified form of square thread. It is much stronger than square thread because of the wider base and it is easy to cut. The inclined sides of the thread facilitate quick and easy engagement and disengagement as for example, the split nut with the lead screw of a lathe.

5.3.1.6 Worm Thread

Worm thread is similar to the ACME thread, but is deeper. It is used on shafts to carry power to worm wheels.

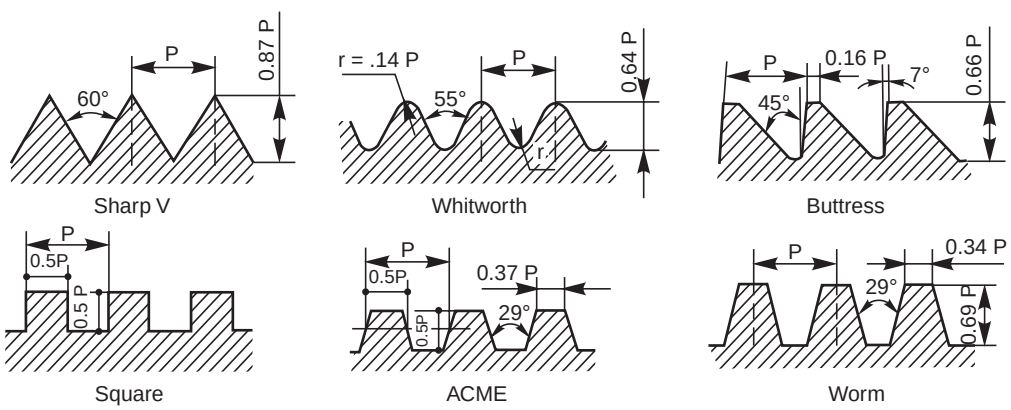

Fig. 5.3 Types of thread profiles

www.EngineeringBooksPdf.com

5.4 THREAD SERIES

BIS recommends two thread series: coarse series and fine series, based on the relative values of the pitches. However, it must be noted that the concept of quality is not associated with these terms. For any particular diameter, there is only one largest pitch, called the coarse pitch and the rest are designated as fine pitches.

Table 5.1 gives the nominal diameter and pitch combinations for coarse and fine series of ISO metric screw threads.

Table 5.1 Diameter-pitch combination for ISO metric threads

Nominal diameter		*Pitch*			
First choice	*Second choice*	*Coarse*	*Fine*		
			1	*2*	*3*
2	—	0.4	0.25	—	
—	2.2	0.45	0.25	—	—
2.5	—	0.45	0.35	—	—
3	—	0.5	0.35	—	—
—	3.5	0.6	0.35	—	—
4	—	0.7	0.5	—	—
—	4.5	0.75	0.5	—	—
5	—	0.8	0.5	—	—
6	—	1	0.75	0.5	—
8	—	1.25	1	0.75	—
10	—	1.5	1.25	1	0.75
12	—	1.75	1.5	1.25	—
16	14	2	1.5	1	—
20	18,22	2.5	2	1.5	1
24	27	3	2	1.5	1
30	33	3.5	2	1.5	1
36	39	4	3	2	1.5
42	45	4.5	4	3	2
48	52	5	4	3	2
56	60	5.5	4	3	2
64	68	6	4	3	2
72	76	6	4	3	2
80	85	6	4	3	2
90	95	6	4	3	2
100	—	6	4	3	2
105 to 300	—	—	6	4	3

www.EngineeringBooksPdf.com

5.5 THREAD DESIGNATION

The diameter-pitch combination of an ISO metric screw thread is designated by the letter 'M' followed by the value of the nominal diameter and pitch, the two values being separated by the sign '×'. For example, a diameter pitch combination of nominal diameter 10 mm and pitch 1.25 mm is designated as M10 × 1.25.

If there is no indication of pitch in the designation, it shall mean the coarse pitch. For example, M 10 means that the nominal diameter of the thread is 10 mm and pitch is 1.5 mm.

Following are the other designations, depending on the shape of the thread profile :

SQ 40 × 10 – SQUARE thread of nominal diameter 40 mm and pitch 10 mm

ACME 40 × 8 – ACME thread of nominal diameter 40 mm and pitch 8 mm

WORM 40 × 10 – WORM thread of nominal diameter 40 mm and pitch 10 mm

5.6 MULTI-START THREADS

A single-start thread consists of a single, continuous helical groove for which the lead is equal to the pitch. As the depth of the thread depends on the pitch, greater the lead desired, greater will be the pitch and hence smaller will be the core diameter, reducing the strength of the fastener. To overcome this drawback, multi-start threads are recommended.

Figure 5.4 shows single and double-start threads of V-and square profiles.

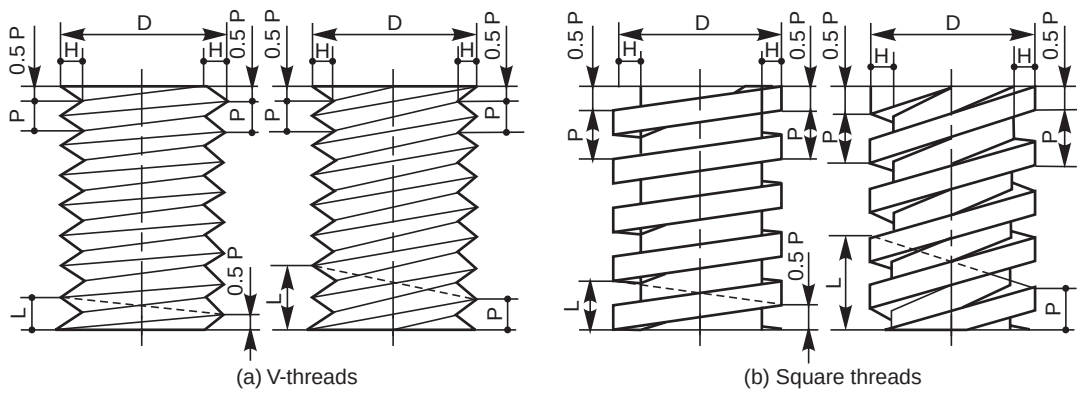

Fig. 5.4 Single and mult-start threads

In multi-start threads, lead may be increased by increasing the number of starts, without increasing the pitch. For a double start thread, lead is equal to twice the pitch and for a triple start thread, lead is equal to thrice the pitch.

In double start threads, two threads are cut separately, starting at points, diametrically opposite to each other. In triple start threads, the starting points are 120° apart on the circumference of the screws.

Multi-start threads are also used wherever quick action is desired, as in fountain pens, automobile starters, arbor press spindles, hydraulic valve spindles, etc.

5.7 RIGHT HAND AND LEFT HAND THREADS

Screw threads may be right hand or left hand, depending on the direction of the helix. A right hand thread is one which advances into the nut, when turned in a clockwise direction and a left hand thread is one which advances into the nut when turned in a counter clockwise direction. An abbreviation LH is used to indicate a left hand thread. Unless otherwise stated, a thread should be considered as a right hand one. Figure 5.5 illustrates both right and left hand thread forms.

www.EngineeringBooksPdf.com

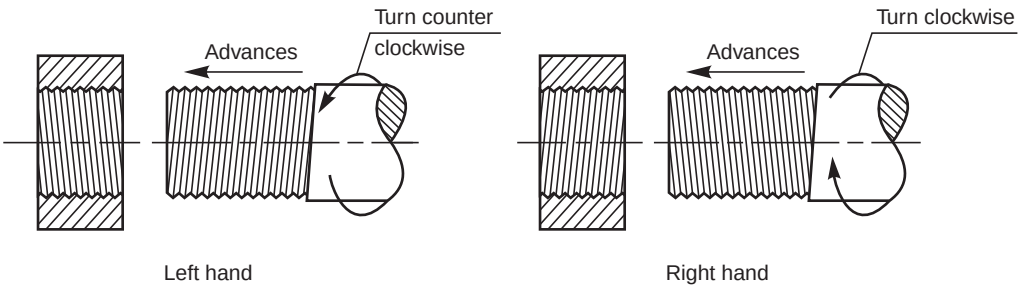

Fig. 5.5 Right hand and left hand threads

5.7.1 Coupler-nut

A coupler-nut or turnbuckle is an example of a machine element, in which both right hand and left hand thread forms are used. The length of a tie rod, may be adjusted by this device. Referring the Fig. 5.6*a* ; out of the two rods operating inside the nut (a long double nut), one will have a right hand thread at its end and the other, a left hand one. The nut is usually hexagonal at its outer surface, with a clearance provided at the centre. By turning the nut, the two rods in it may move either closer together, or away from each other. Figure 5.6*b* shows a coupler used for railway coaches. They are also used for fixing guy wires, etc.

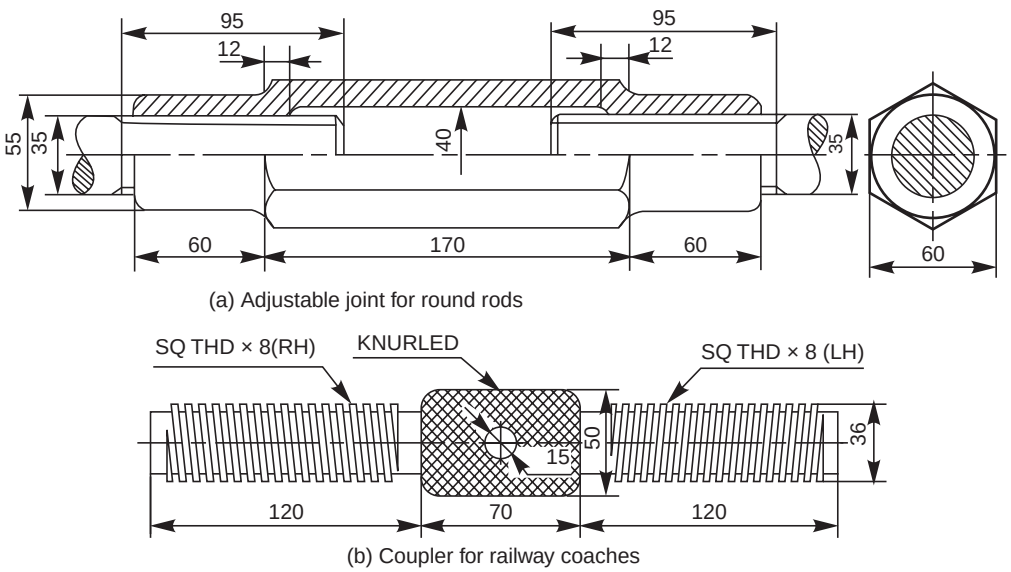

Fig. 5.6

5.8 REPRESENTATION OF THREADS

The true projection of a threaded portion of a part consists of a series of helices and it takes considerable time to draw them. Hence it is the usual practice to follow some conventional methods to represent screw threads. Figure 5.1 shows the true projection of a screw thread, whereas the conventional representation of external and internal threads as recommended by BIS is shown in Fig. 5.7.

www.EngineeringBooksPdf.com

It may be noted from Fig. 5.7, that the crests of threads are indicated by a continuous thick line and the roots, by a continuous thin line. For hidden screw threads, the crests and roots are indicated by dotted lines. For threaded parts in section, hatching should be extended to the line defining the crest of the thread. In the view from side, the threaded roots are represented by a portion of a circle, drawn with a continuous thin line, of length approximately three-quarters of the circumference.

The limit of useful length of screw threads is represented by a continuous thick line or a dotted line, depending on its visibility. The length upto which the incomplete threads are formed beyond the useful limit, is known as a run-out. It is represented by two inclined lines.

The simplified representation, though it saves time, is not an effective method to convey thread forms. The schematic representation, used for the purpose is shown in Fig. 5.8. In practice, the schematic representation is followed for only visible threads, *i.e.,* for external threads and internal threads in section. From the Fig. 5.8, it may be observed that the crest diameters, both in external and internal threads, are drawn by thick lines. Further, the crests are represented by thin lines, extending upto the major diameter and the roots by thick lines, extending upto the minor diameter, these lines being drawn inclined with a slope equal to half the pitch.

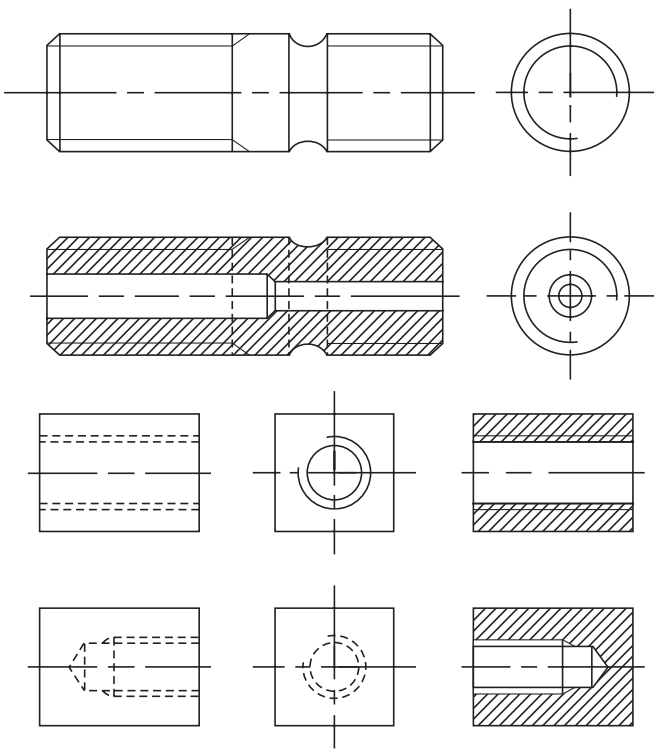

Fig. 5.7 Conventional representation of threads

www.EngineeringBooksPdf.com

Fig. 5.9 illustrates the schematic representation of square threads.

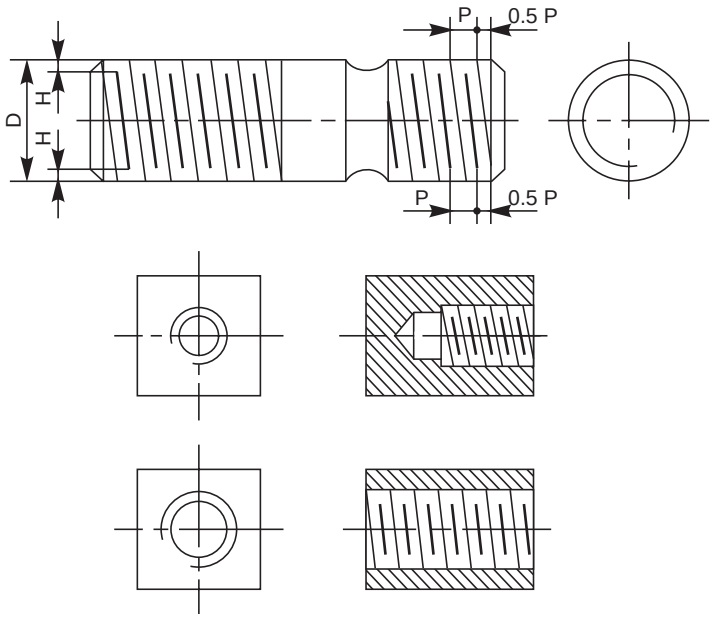

Fig. 5.8 Schematic representation of threaded parts–V-threads

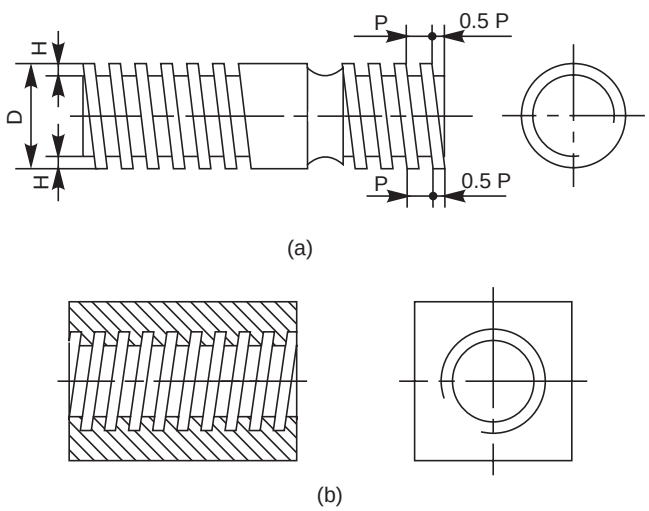

Fig. 5.9 Schematic representation of threaded parts–Square threads

5.8.1 Representation of Threaded Parts in Assembly

Figure 5.10 *a* shows the schematic representation and Figs. 5.10*b* and *c*, the conventional representation of threads in engagement.

Figure 5.10 *a* represents the internal threaded part in section; however, the external threaded one is shown unsectioned. In Figs. 5.10*b* and *c*, the external threaded parts are shown covering the internal threaded parts and should not be shown as hidden by them.

www.EngineeringBooksPdf.com

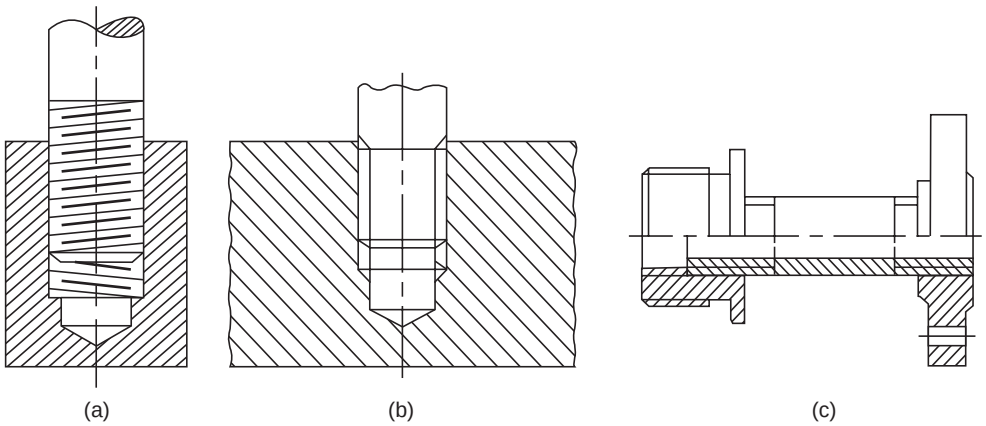

Fig. 5.10 External and internal threads in engagement

5.9 BOLTED JOINT

A bolt and nut in combination (Fig. 5.11) is a fastening device used to hold two parts together. The body of the bolt, called shank is cylindrical in form, the head; square or hexagonal in shape, is formed by forging. Screw threads are cut on the other end of the shank. Nuts in general are square or hexagonal in shape. The nuts with internal threads engage with the corresponding size of the external threads of the bolt. However, there are other forms of nuts used to suit specific requirements.

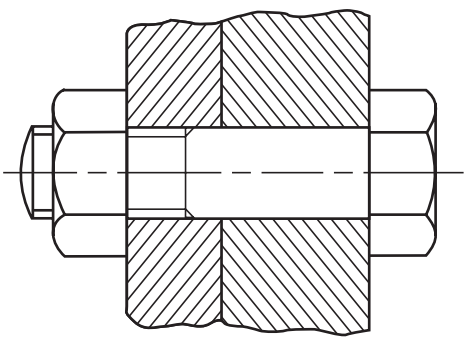

Fig. 5.11 Bolted joint

For nuts, hexagonal shape is preferred to the square one, as it is easy to tighten even in a limited space. This is because, with only one-sixth of a turn, the spanner can be re-introduced in the same position. However, square nuts are used when frequent loosening and tightening is required, for example on job holding devices like vices, tool posts in machines, etc.

The sharp corners on the head of bolts and nuts are removed by chamfering.

5.9.1 Methods of Drawing Hexagonal (Bolt Head) Nut

Drawing hexagonal bolt head or nut, to the exact dimensions is labourious and time consuming. Moreover, as standard bolts and nuts are used, it is not necessary to draw them accurately. The following approximate methods are used to save the draughting time :

Method 1 (Fig. 5.12)

Empirical relations :

Major or nominal diameter of bolt = D

Thickness of nut, T = D

Width of nut across flat surfaces, W = 1.5D + 3 mm

Radius of chamfer, R = 1.5D

www.EngineeringBooksPdf.com

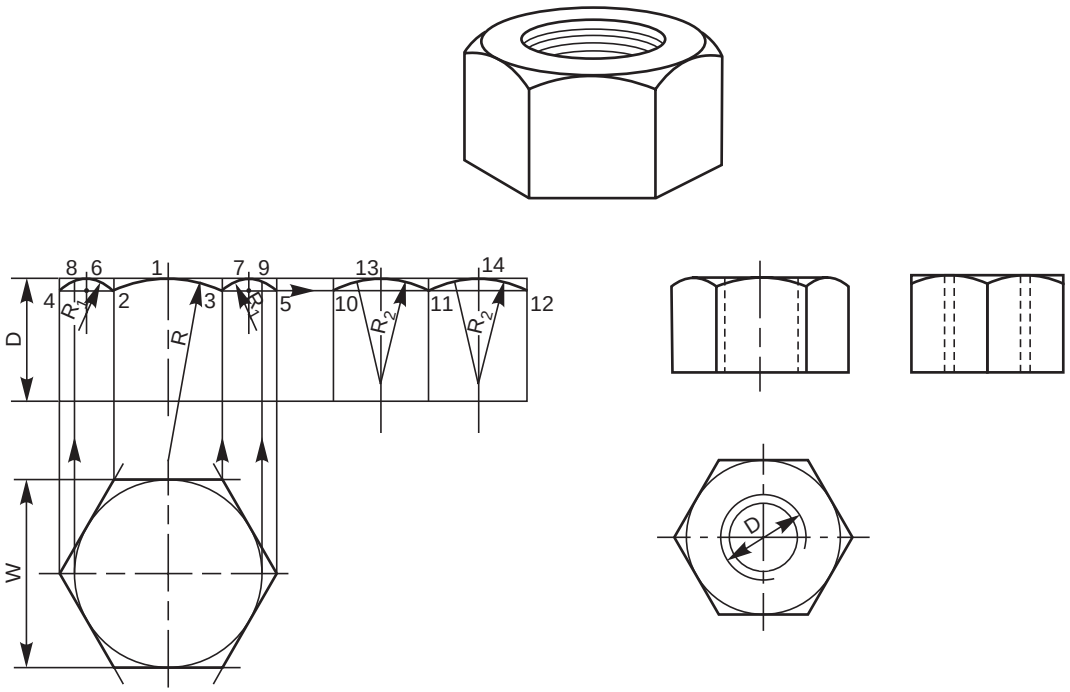

Fig. 5.12 Method of drawing views of a hexagonal nut (Method I)

PROCEDURE

1. Draw the view from above by drawing a circle of diameter, W and describe a regular hexagon on it, by keeping any two parallel sides of the hexagon, horizontal.
2. Project the view from the front, and the view from side, and mark the height equal to D.
3. With radius R, draw the chamfer arc 2-1-3 passing through the point 1 in the front face.
4. Mark points 4 and 5, lying in-line with 2 and 3.
5. Locate points 8,9 on the top surface, by projecting from the view from above.
6. Draw the chamfers 4–8 and 5–9.
7. Locate points 6 and 7, lying at the middle of the outer two faces.
8. Draw circular arcs passing through the points 4, 6, 2 and 3, 7, 5, after determining the radius R_1 geometrically.
9. Project the view from the side and locate points 10, 11 and 12.
10. Mark points 13 and 14, lying at the middle of the two faces (view from the side).
11. Draw circular arcs passing through the points 10, 13, 11 and 11, 14, 12, after determining the radius R_2 geometrically.

It may be noted that in the view from the front, the upper outer corners appear chamfered. In the view from the side, where only two faces are seen, the corners appear square.

Method 2 (Fig. 5.13)

Empirical relations :

Major or nominal diameter of bolt = D

Thickness of nut, T = D

www.EngineeringBooksPdf.com

Width of the nut across corners = 2 D

Radius of chamfer arc, R = 1.5 D

Figure 5.13 illustrates the stages of drawing different views of a hexagonal nut, following the above relations, which are self-explanatory.

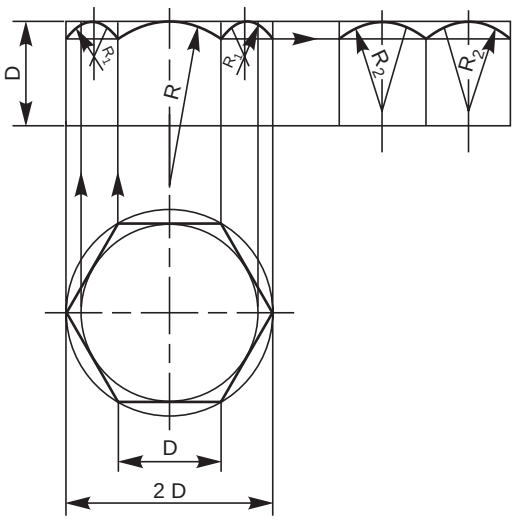

(a)

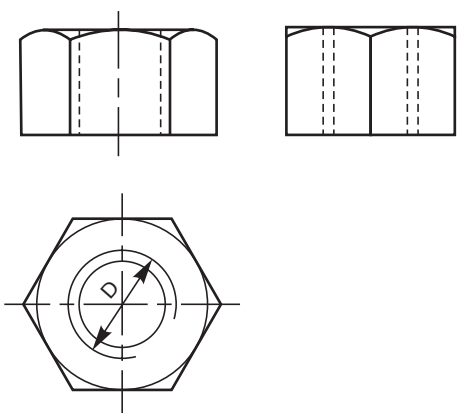

(b)

Fig. 5.13 Method of drawing views of a hexagonal nut (Method II)

The above method may be followed in routine drawing work, as it helps in drawing the views quickly.

5.9.2 Method of Drawing Square (Bolt Head) Nut

A square bolt head and nut may be drawn, showing either across flats or corners. Following relations may be adopted for the purpose:

www.EngineeringBooksPdf.com

Major or nominal diameter of bolt	= D
Thickness of nut, T	= D
Width of the nut across flats, W	= 1.5 D + 3 mm
Radius of chamfer arc, R	= 2 D

Figure 5.14 illustrates the method of drawing views of a square nut, in two orientations.

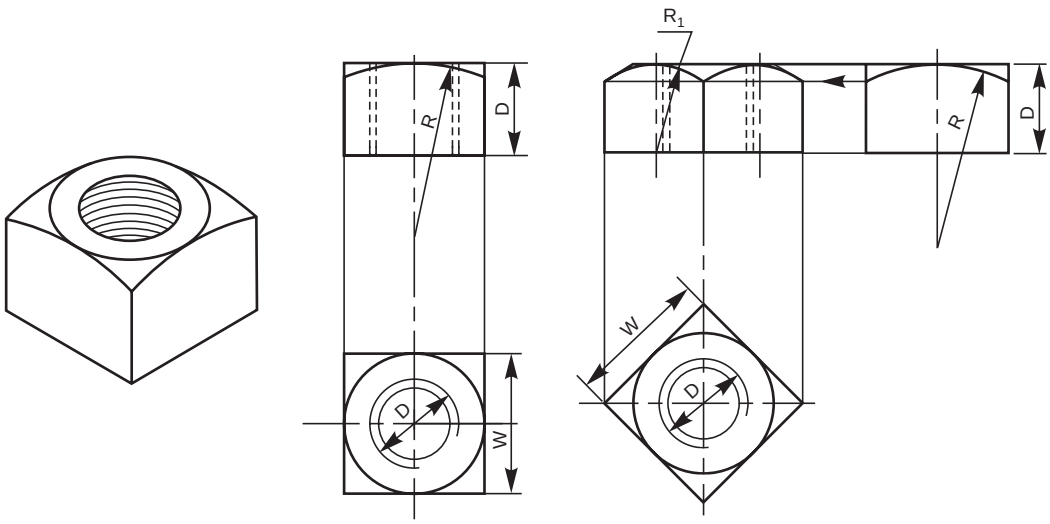

Fig.5.14 Method of drawing the views of a square nut

5.9.3 Hexagonal and Square Headed Bolts

Figure 5.15 shows the two views of a hexagonal headed bolt and square headed bolt, with the proportions marked.

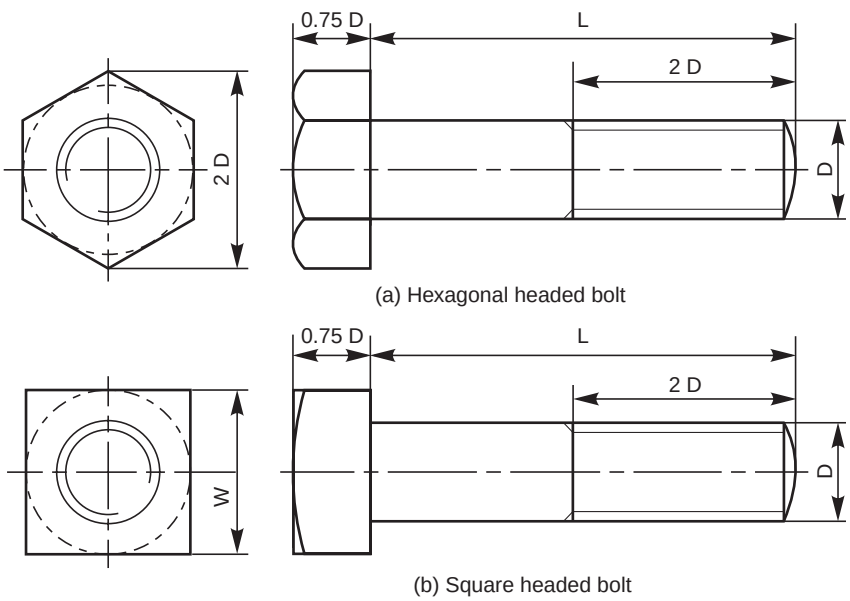

Fig. 5.15

www.EngineeringBooksPdf.com

5.9.4 Washers

A washer is a cylindrical piece of metal with a hole to receive the bolt. It is used to give a perfect seating for the nut and to distribute the tightening force uniformly to the parts under the joint. It also prevents the nut from damaging the metal surface under the joint. Figure 5.16 shows a washer, with the proportions marked.

Figure 5.17 illustrates the views of a hexagonal headed bolt with a nut and a washer in position.

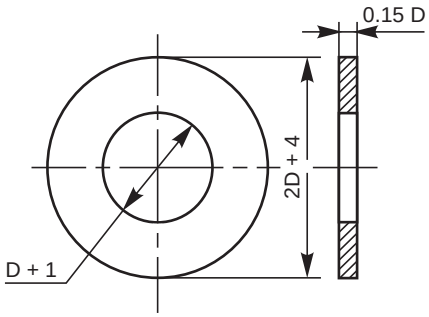

Fig. 5.16 Washer

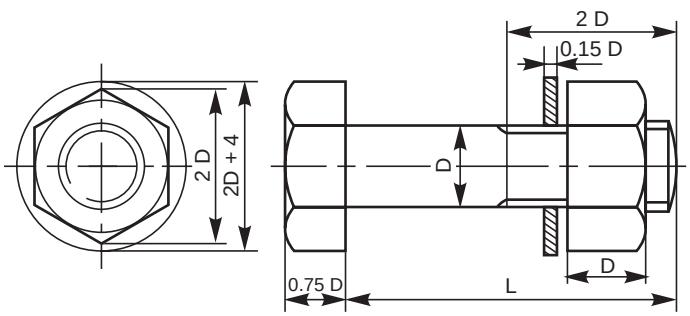

Fig. 5.17 A hexagonal headed bolt with a nut and a washer in position

5.9.5 Other Forms of Bolts

5.9.5.1 Square Headed Bolt with Square Neck

It is provided with a square neck, which fits into a corresponding square hole in the adjacent part, preventing the rotation of the bolt (Fig. 5.18).

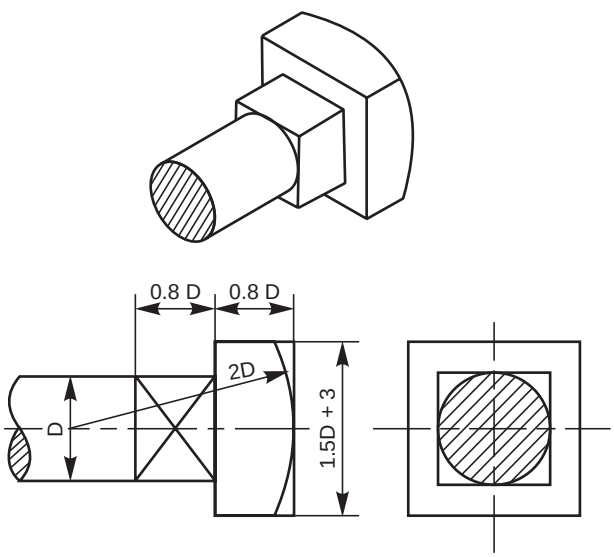

Fig. 5.18 Square headed bolt with square neck

www.EngineeringBooksPdf.com

5.9.5.2 T-Headed Bolt With Square Neck

In this, a square neck provided below the head, prevents the rotation of the bolt. This type of bolt is used for fixing vices, work pieces, etc., to the machine table having T-slots (Fig. 5.19).

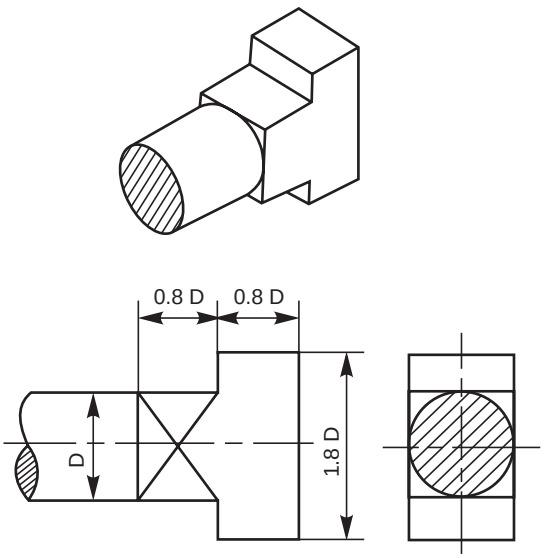

Fig. 5.19 T-headed bolt

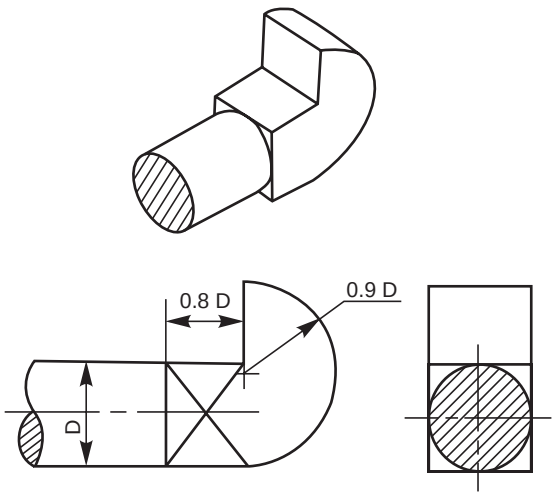

Fig. 5.20 Hook bolt

5.9.5.3 Hook Bolt

This bolt passes through a hole in one part only, while the other part is gripped by the hook shaped bolt head. It is used where there is no space for making a bolt hole in one of the parts. The square neck prevents the rotation of the bolt (Fig. 5.20).

5.9.5.4 Eye Bolt

In order to facilitate lifting of heavy machinery, like electric generators, motors, turbines, etc., eye bolts are screwed on to their top surfaces. For fitting an eye bolt, a tapped hole is provided, above the centre of gravity of the machine (Fig. 5.21).

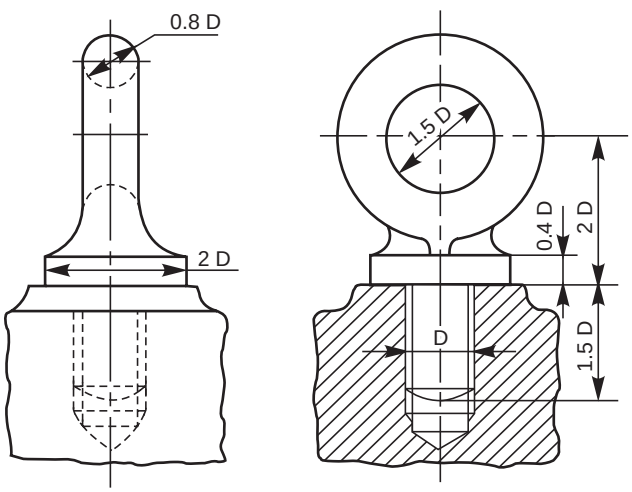

Fig. 5.21 Eye-bolt

www.EngineeringBooksPdf.com

5.9.5.5 Stud Bolt or Stud

It consists of cylindrical shank with threads cut on both the ends (Fig. 5.22*a*). It is used where there is no place for accommodating the bolt head or when one of the parts to be joined is too thick to use an ordinary bolt.

The stud is first screwed into one of the two parts to be joined, usually the thicker one. A stud driver, in the form of a thick hexagonal nut with a blind threaded hole is used for the purpose. After placing the second part over the stud, a nut is screwed-on over the nut end. It is usual to provide in the second part, a hole which is slightly larger than the stud nominal diameter. Figure 5.22*b* shows a stud joint.

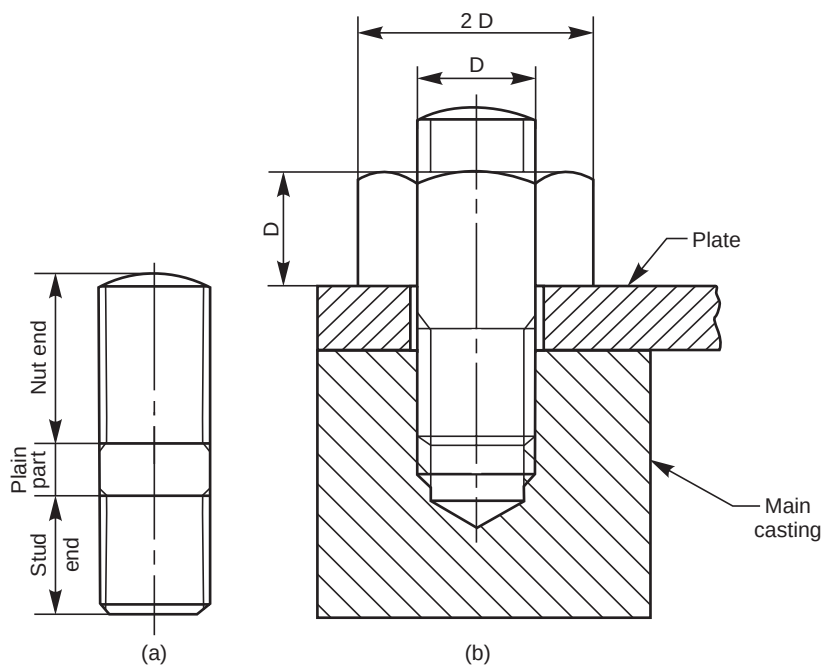

Fig. 5.22 (*a*)–Stud, (*b*)–Stud joint

5.9.6 Other Forms of Nuts

5.9.6.1 Flanged Nut

This is a hexagonal nut with a collar or flange, provided integral with it. This permits the use of a bolt in a comparitively large size hole (Fig. 5.23*a*).

5.9.6.2 Cap Nut

It is a hexagonal nut with a cylindrical cap at the top. This design protects the end of the bolt from corrosion and also prevents leakage through the threads. Cap nuts are used in smoke boxes or locomotive and steam pipe connections (Fig. 5.23*b*).

5.9.6.3 Dome Nut

It is another form of a cap nut, having a spherical dome at the top (Fig. 5.23*c*).

5.9.6.4 Capstan Nut

This nut is cylindrical in shape, with holes drilled laterally in the curved surface. A tommy bar may be used in the holes for turning the nut (Fig. 5.23*d*). Holes may also be drilled in the upper flat face of the nut.

www.EngineeringBooksPdf.com

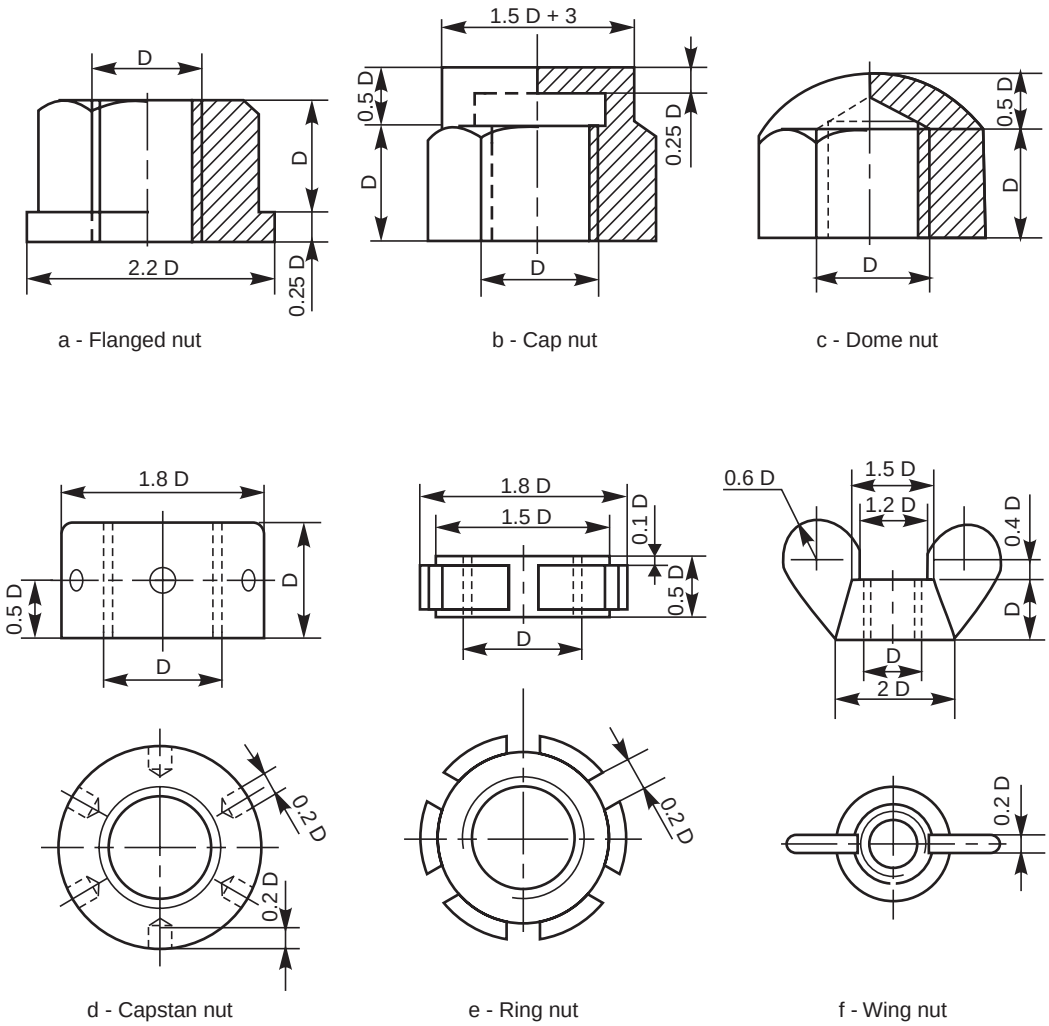

Fig. 5.23 Other forms of nuts

5.9.6.5 Slotted or Ring Nut

This nut is in the form of a ring, with slots in the curved surface, running parallel to the axis. A special C-spanner is used to operate the nut. These nuts are used on large screws, where the use of ordinary spanner is inconvenient (Fig. 5.23*e*).

5.9.6.6 Wing Nut

This nut is used when frequent removal is required, such as inspection covers, lids, etc. It is operated by the thumb (Fig. 5.23*f*).

5.9.7 Cap Screws and Machine Screws

Cap screws and machine screws are similar in shape, differing only in their relative sizes. Machine screws are usually smaller in size, compared to cap screws. These are used for fastening two parts, one with clearance hole and the other with tapped hole. The clearance of the unthreaded hole need not be shown on the drawing as its presence is obvious. Figure 5.24 shows different types of cap and machine screws, with proportions marked.

www.EngineeringBooksPdf.com

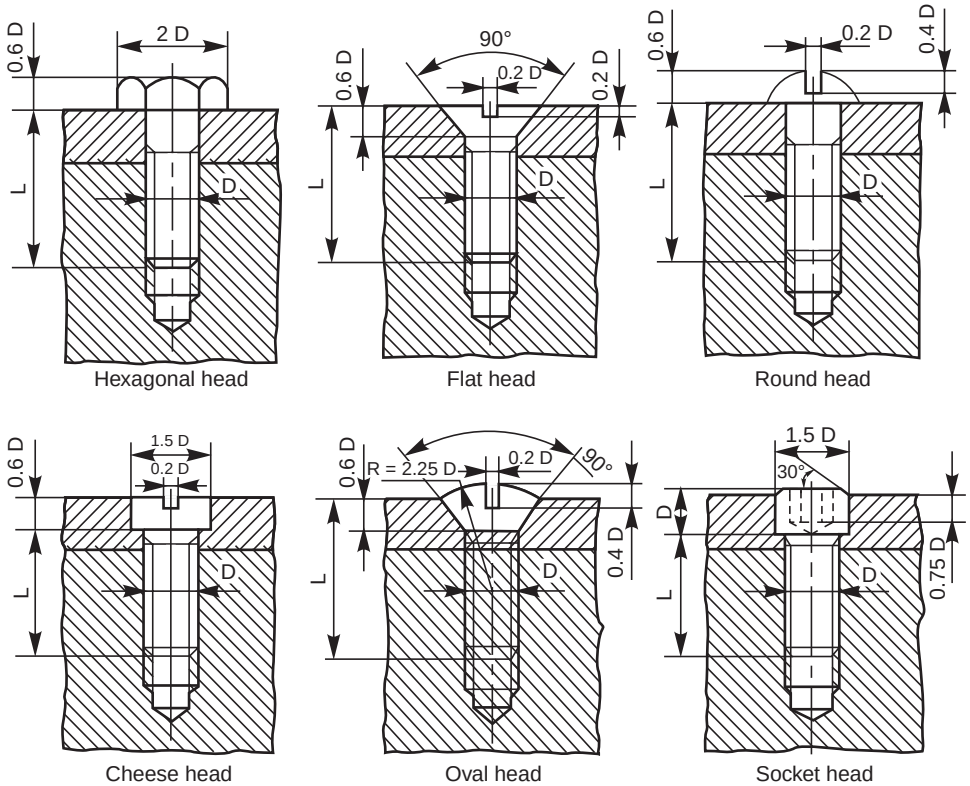

Fig. 5.24 Types of machine and cap screws

Cap screws are produced in finish form and are used on machines where accuracy and appearance are important. As cap screws are inferior to studs, they are used only on machines requiring few adjustments and are not suitable where frequent removal is necessary. These are produced in different diameters, upto a maximum of 100 mm and lengths 250 mm.

Machine screws are produced with a naturally bright finish and are not heat treated. They are particularly adopted for screwing into thin materials and the smaller ones are threaded throughout the length. They are used in fire-arms, jigs, fixture and dies. They are produced in different diameters upto a maximum of 20 mm and lengths upto 50 mm.

5.9.8 Set Screws

These are used to prevent relative motion between two rotating parts, such as the movement of pulley on shaft. For this, a set screw is screwed into the pulley hub so that its end-point bears firmly against the shaft (Fig. 5.25). The fastening action is by friction between the screw and the shaft.

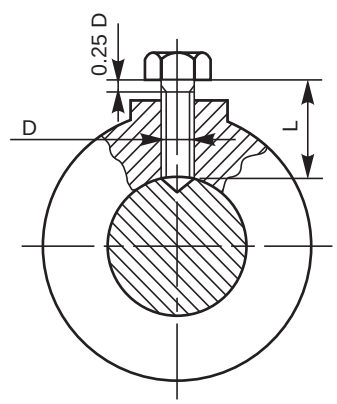

Fig. 5.25

Set screws are not efficient and so are used only for transmitting very light loads. For longer life, set screws are made of steel and case hardened. Further, for better results, the shaft surface is suitably machined for providing more grip, eliminating any slipping tendency. Figure 5.26 shows different forms of set screws.

www.EngineeringBooksPdf.com

5.10 LOCKING ARRANGEMENTS FOR NUTS

The bolted joints, though removable in nature, are required to stay firm without becoming loose, of their own accord. However, the joints used in the moving parts of a machinery, may be subjected to vibrations. This may slacken the joint, leading to serious breakdown. To eliminate the slackening tendency, different arrangements, as discussed further, are used to lock the nuts :

5.10.1 Lock Nut

This is the most commonly used locking device. In this arrangement, a second nut, known as lock nut is used in combination with a standard nut (Fig. 5.27*a*). The thickness of a lock nut is usually two-thirds D, where D is the major diameter of the bolt. The lock nut is usually placed below the standard nut. To make the joint, the lock nut is first screwed tightly and then the standard nut is tightened till it touches the lock nut. Afterwards, the locknut is then screwed back on the standard nut, which is held by a spanner. The threads of the two nuts become wedged between the threads of the bolt.

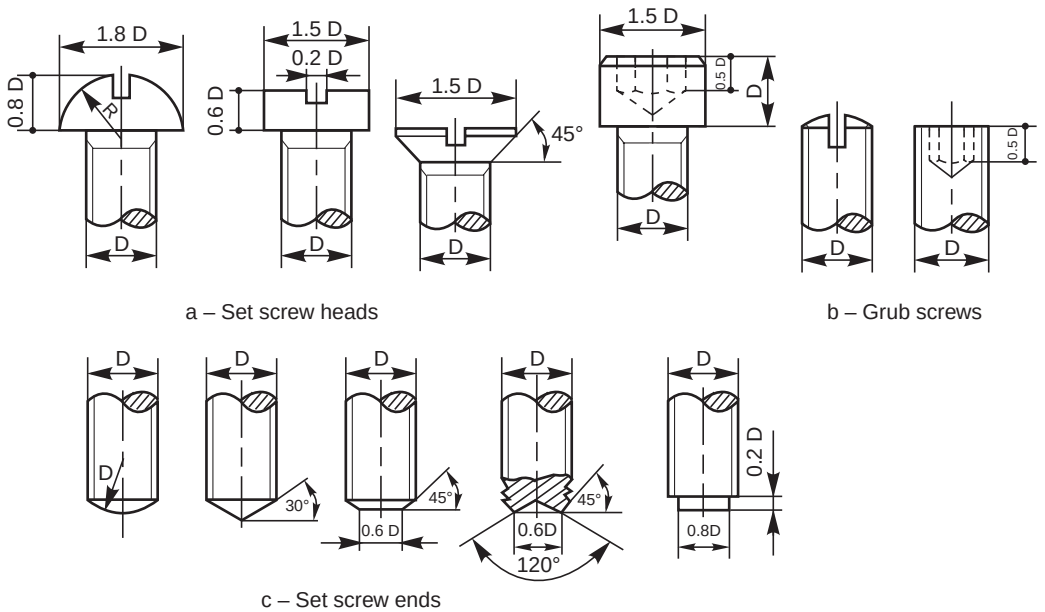

Fig. 5.26

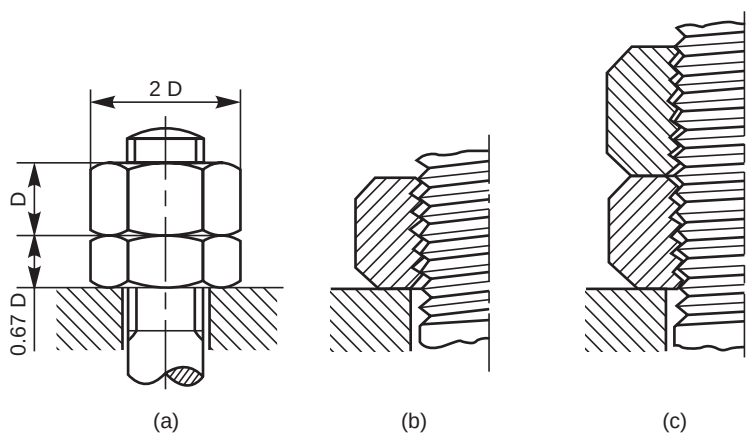

Fig. 5.27 Lock nut

www.EngineeringBooksPdf.com

When the lock nut is first screwed into its position, the top flanks of it press against the bottom flanks of the bolt (Fig. 5.27*b*). Figure 5.27*c* shows the condition between the flanks of the nuts and the bolt, when the second nut is locked in position. It may be observed that in this position, the top flanks of the top nut, press against the bottom flanks of the bolt, whereas, the bottom flanks of the lock nut press against the top flanks of the bolt.

5.10.2 Locking by Split Pin

A split pin, made of steel wire of semi-circular cross-section is used for locking the nut. In this arrangement, the split pin is inserted through a hole in the bolt body and touching just the top surface of the nut. Then, the ends of the pin are split open to prevent it from coming out while in use (Fig. 5.28).

5.10.3 Locking by Castle Nut

A castle nut is a hexagonal nut with a cylindrical collar turned on one end. Threads are cut in the nut portion only and six rectangular slots are cut through the collar. A split pin is inserted through a hole in the bolt body after adjusting the nut such that the hole in the bolt body comes in-line with slots. This arrangement is used in automobile works (Fig. 5.29).

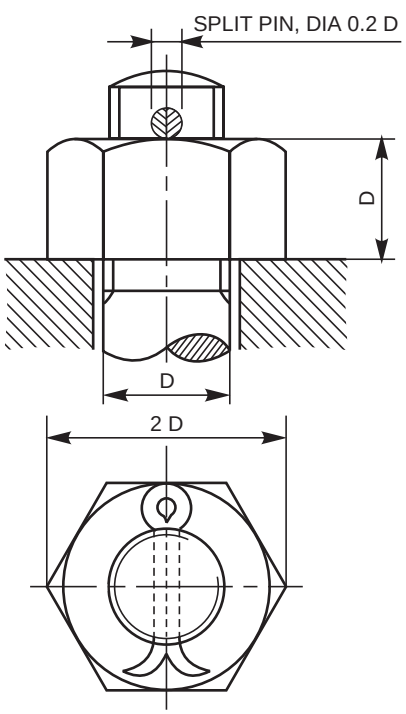

Fig. 5.28 Locking by split pin

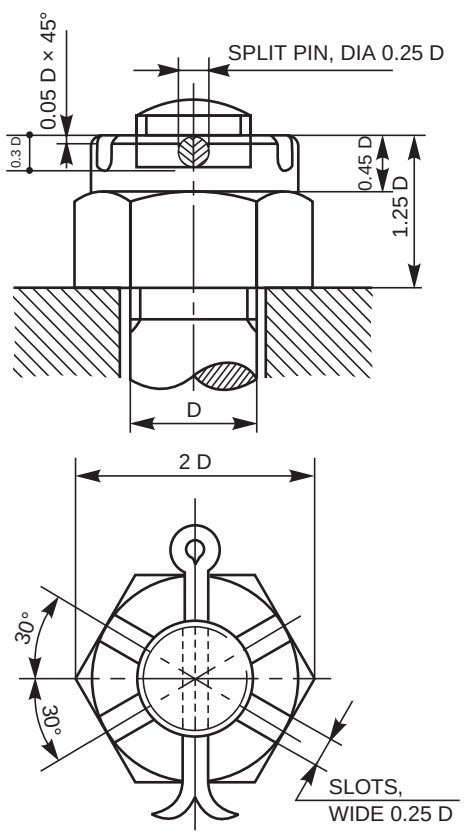

Fig. 5.29 Castle nut

www.EngineeringBooksPdf.com

5.10.4 Wile's Lock nut

It is a hexagonal nut with a slot, cut half-way across it. After tightening the nut in the usual manner, a set screw is used from the top of the nut, compressing the two parts. For this purpose, the upper portion of the nut should have a clearance hole and the lower portion tapped (Fig. 5.30).

5.10.5 Locking by Set Screw

In this arrangement, after the nut is tightened, a set screw in fitted in the part, adjoining the nut, so that it touches one of the flat faces of the nut. The arrangement prevents the loosening tendency of the nut (Fig. 5.31).

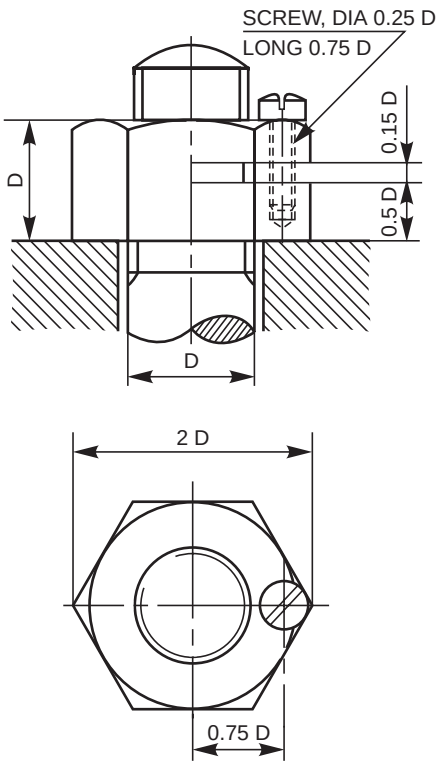

Fig. 5.30 Wile's lock nut

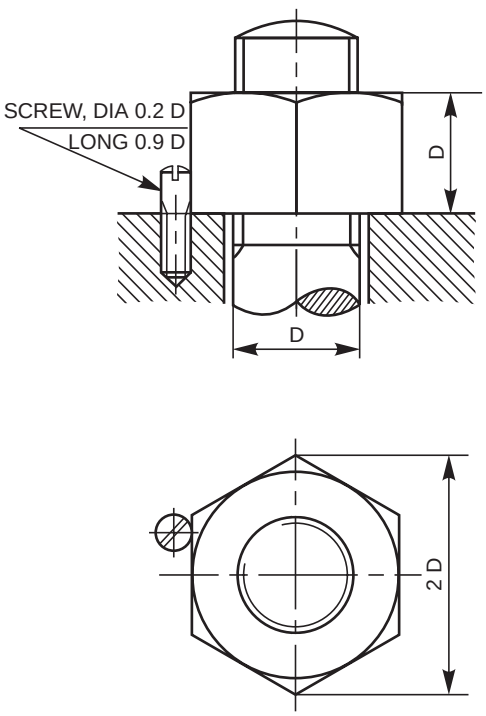

Fig. 5.31 Locking by set screw

5.10.6 Grooved Nut

It has a cylindrical grooved collar, integrally provided at the lower end of the nut. This collar fits into a corresponding recess in the adjoining part. In this arrangement, after tightening the nut, a set screw is inserted from one end of the upper part, so that the end of the set screw enters the groove, preventing the loosening tendency of the nut (Fig. 5.32).

5.10.7 Locking by Screw

In this, a cap nut with an integral washer and with a threaded hole in the cylindrical cap, is used. A corresponding tapped hole at the top end of the bolt is also required for the purpose.

www.EngineeringBooksPdf.com

In this arrangement, a set screw fitted through the cap and through the bolt end, prevents the loosening tendency of the nut, when the pitches of the main nut and the set screw are different (Fig. 5.33). This type of arrangement is used for fitting the propeller blades on turbine shafts.

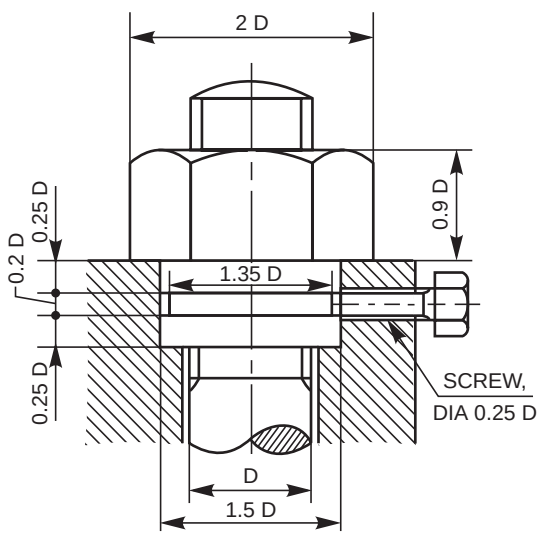

Fig. 5.32 Grooved nut

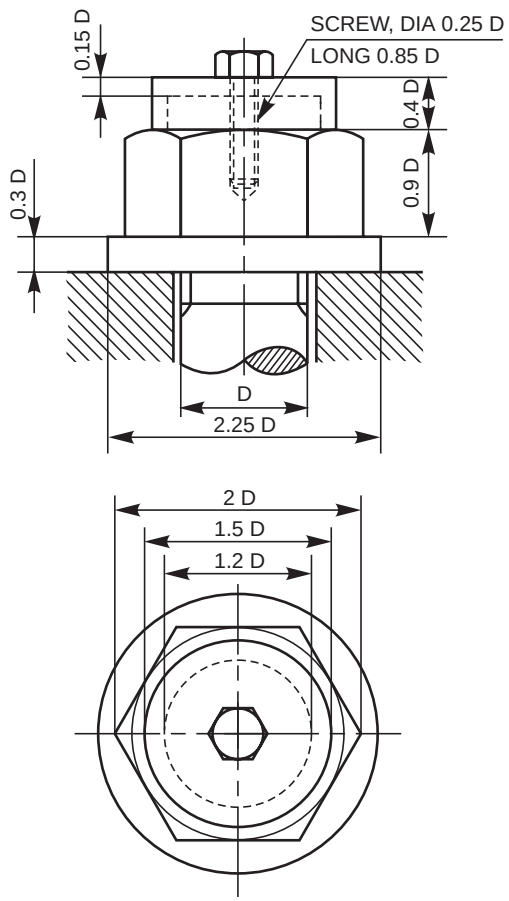

Fig. 5.33 Locking by screw

5.10.8 Locking by Plate

A locking plate is grooved such that it fits a hexagonal nut in any position, at intervals of 30° of rotation. It is fixed around the nut, by means of a machine screw, as shown in Fig. 5.34.

5.10.9 Locking by Spring Washer

In this arrangement, a spring washer of either single or double coil is placed under the nut and tightened. The spring force of the washer will be acting upwards on the nut. This force makes the threads in the nut jammed on the bolt threads; thus preventing the nut from loosening (Fig. 5.35).

www.EngineeringBooksPdf.com

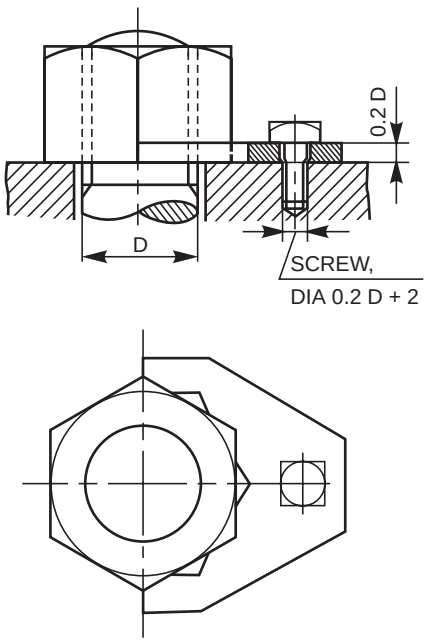

Fig. 5.34 Locking by plate

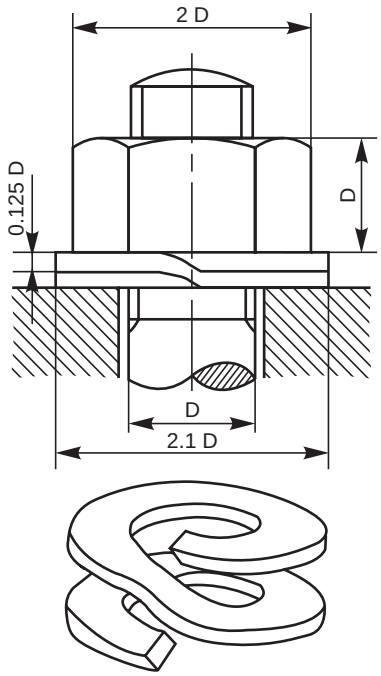

Fig. 5.35 Locking by spring washer

5.11 FOUNDATION BOLTS

Foundation bolts are used for fixing machines to their foundations. Foundation bolts are made by forging from mild steel or wrought iron rods. The bolt size depends upon the size of the machine and the magnitude of the forces that act on them when the machine is in operation.

For setting the bolts in position, their positions are marked and then suspended in the holes made in the ground. Afterwards, cement concrete is filled in the space around in the bolts. Once the concrete sets; the bolts are firmly secured to the ground.

5.11.1 Eye Foundation Bolt

This is the simplest form of all foundation bolts. In this, one end of the bolt is forged into an eye and a cross piece is fixed in it. Figure 5.36 shows an eye foundation bolt that is set in concrete.

5.11.2 Bent Foundation Bolt

As the name implies, this bolt is forged in bent form and set in cement concrete. When machines are to be placed on stone beds, the bolts are set in lead. Figure 5.37 shows a bent foundation bolt that is set first in lead and then in cement concrete, resulting in a firm and stable bolt.

5.11.3 Rag Foundation Bolt

This bolt consists of a tapered body, square or rectangular in cross-section, the tapered edges being grooved. Figure 5.38 shows a rag foundation bolt that is set first in lead and then in cement concrete.

www.EngineeringBooksPdf.com

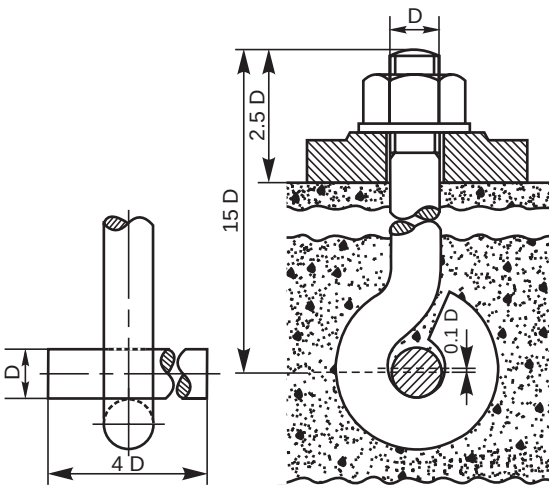

Fig. 5.36 Eye foundation bolt

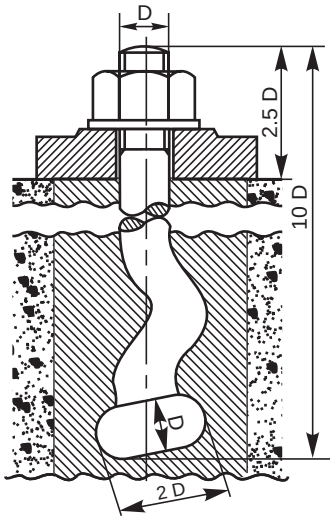

Fig. 5.37 Bent foundation bolt

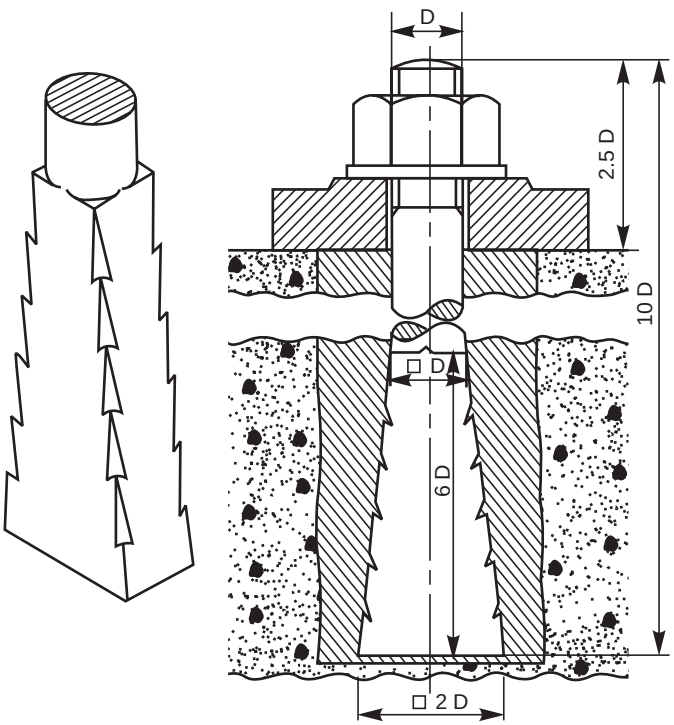

Fig. 5.38 Rag foundation bolt

5.11.4 Lewis Foundation Bolt

This is a removable foundation bolt. The body of the bolt is tapered in width on one side. To use this bolt, a pit is produced in cement concrete, by using a (foundation) block. Once the concrete sets-in, the bolt is placed in it so that the tapered bolt surface, bears against the tapered face of the pit. A key is then inserted, bearing against the straight surfaces of the pit and the bolt. This arrangement makes the bolt firm in the bed. However, the bolt may be removed by withdrawing the key (Fig. 5.39).

www.EngineeringBooksPdf.com

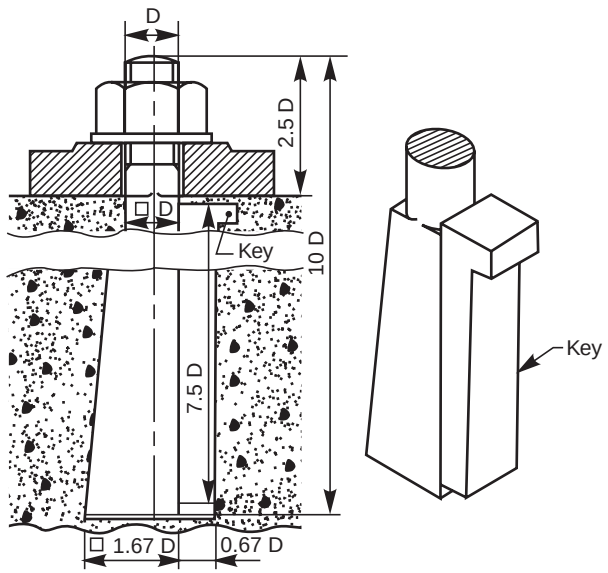

Fig. 5.39 Lewis foundation bolt

This type of foundation bolt is not commonly used for fixing machines. However, the principle is advantageously used for lifting huge stones. For this, a groove, similar to the pit is chiselled in the stone and the bolt is fitted in. The top end of the bolt may be forged into an eye and used for lifting purposes.

5.11.5 Cotter Foundation Bolt

It is used for fixing heavy machines. It has a rectangular slot at its bottom end, to receive a cotter. For putting the bolts in position, the foundation bed is first made, providing holes for inserting cotters. Figure 5.40 shows a cotter foundation bolt in position. A cast iron washer (W) placed as shown, provides bearing surface for the cotter (C).

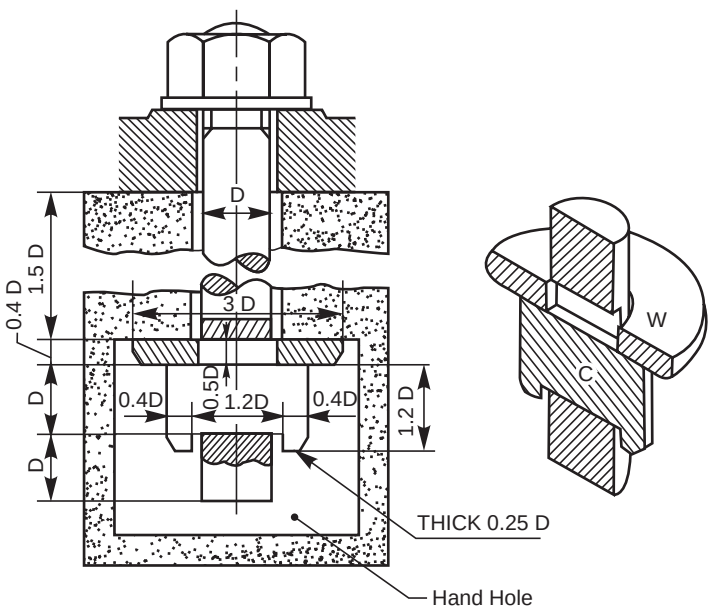

Fig. 5.40 Cotter foundation bolt

www.EngineeringBooksPdf.com

THEORY QUESTIONS

5.1 What is a fastener and what is meant by fastening ?

5.2 What are the various applications of screwed fasteners ?

5.3 Define the following terms with respect to screw threads : (*a*) pitch (*b*) pitch diameter, (*c*) major diameter, (*d*) minor diameter, (*e*) lead, (*f*) crest, (*g*) root and (*h*) thread angle.

5.4 Distinguish between the following : (*a*) metric and BSW threads, (*b*) square and ACME threads, (*c*) left hand and right hand threads and (*d*) pitch and lead of a thread.

5.5 What is a multi-start thread and how it differs from a single start thread ?

5.6 Where are multi-start threads used and why ?

5.7 What is the pitch and lead in the case of a double start thread ?

5.8 What type of thread is used for the screw jack and lathe lead screw and why ?

5.9 How are the following threads designated as per BIS : (*a*) metric thread with coarse pitch, (*b*) metric thread with fine pitch, (*c*) square thread, (*d*) ACME thread and (*e*) worm thread.

5.10 Why hexagonal shape is preferred to square one for nuts ?

5.11 Why are washers used in bolted joints ?

5.12 What is a T-bolt and where is it used ?

5.13 What is an eye-bolt and for what purpose is it used ?

5.14 What is a stud bolt and where is it used ?

5.15 Differentiate between the following:

(*a*) Bolt and screw, (*b*) machine screw and set screw, and (*c*) cap screw and machine screw.

5.16 What is a set screw ? What is its function ?

5.17 What are locking devices ? Where and why are they used ?

5.18 What are foundation bolts and where are they used ?

DRAWING EXERCISES

5.1 Sketch the internal and external ISO metric thread profile of nominal size of 25 mm and pitch of 3 mm.

5.2 Sketch the following thread profiles for a nominal diameter of 25 mm and pitch 3 mm and give their applications:

(*a*) BSW thread, (*b*) Buttress thread (*c*) Square thread,
(*d*) ACME thread and (*e*) Worm thread.

5.3 Sketch a double start square thread of pitch 5 mm and nominal diameter 50 mm.

5.4 Sketch the half sectional view of a coupler, connecting two rods, each of 25 mm diameter.

5.5 Sketch the conventional representation of the following:

(*a*) external threads, (*b*) internal threads,
(*c*) thread in section and (*d*) assembled threads in section.

5.6 Give the proportions of a hexagonal nut, in terms of the nominal diameter of the bolt. Answer with respect to the various methods followed in practice.

5.7 Draw the three views of a hexagonal headed bolt of nominal diameter 25 mm and length 100 mm; with a hexagonal nut and washer.

5.8 Sketch any two types of bolts, mentioning their applications.

5.9 Sketch the following forms of nuts, with proportions marked:

(*a*) flanged nut, (*b*) cap nut, (*c*) dome nut,
(*d*) capstan nut, (*e*) wing nut and (*f*) ring nut.

5.10 Sketch any three types of machine screws of 10 mm diameter.

5.11 Sketch any three types of cap screws of 25 mm diameter.

www.EngineeringBooksPdf.com

5.12 Sketch the various forms of set screw ends of size 16 mm diameter.

5.13 Sketch the two views of a castle nut, with proportions marked.

5.14 Sketch the following locking devices in position, with proportions marked, taking the bolt diameter as 25 mm:

(*a*) locking with pin, (*b*) locking by castle nut,

(*c*) locking by a nut, and (*d*) locking by a set screw.

5.15 Sketch neatly, giving proportionate dimensions; the following foundation bolts of diameter 25 mm:

(*a*) eye foundation bolt, and (*b*) Lewis foundation bolt.

www.EngineeringBooksPdf.com

KEYS, COTTERS AND PIN JOINTS

6

6.1 INTRODUCTION

Keys, cotters and pin joints discussed in this chapter are some examples of removable (temporary) fasteners. Assembly and removal of these joints are easy as they are simple in shape. The standard proportions of these joints are given in the figures.

6.2 KEYS

Keys are machine elements used to prevent relative rotational movement between a shaft and the parts mounted on it, such as pulleys, gears, wheels, couplings, etc. Figure 6.1 shows the parts of a keyed joint and its assembly.

For making the joint, grooves or keyways are cut on the surface of the shaft and in the hub of the part to be mounted. After positioning the part on the shaft such that, both the keyways are properly aligned, the key is driven from the end, resulting in a firm joint.

For mounting a part at any intermediate location on the shaft, first the key is firmly placed in the keyway of the shaft and then the part to be mounted is slid from one end of the shaft, till it is fully engaged with the key.

Keys are classified into three types, viz., saddle keys, sunk keys and round keys.

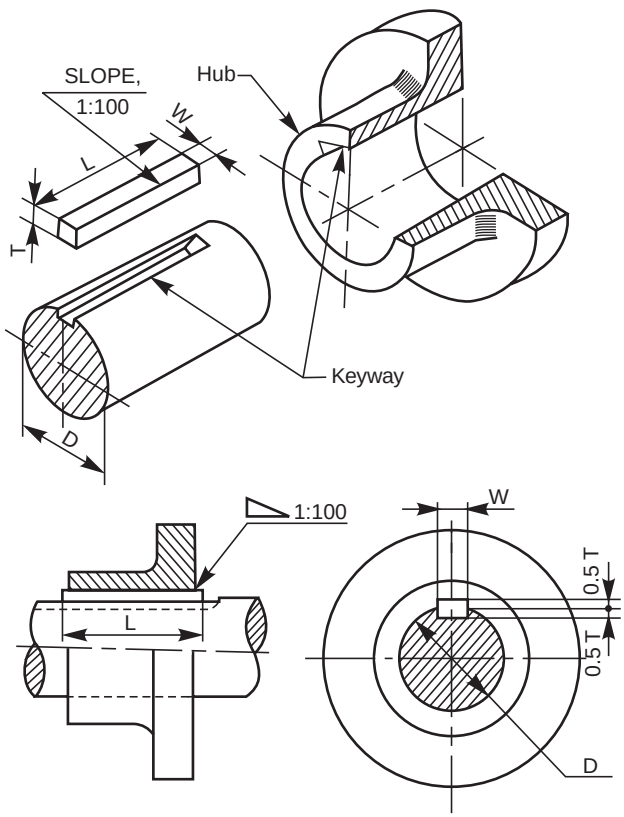

Fig. 6.1 Keyed joint

6.2.1 Saddle Keys

These are taper keys, with uniform width but tapering in thickness on the upper side. The magnitude of the taper provided is 1:100. These are made in two forms: hollow and flat.

www.EngineeringBooksPdf.com

6.2.1.1 Hollow Saddle Key

A hollow saddle key has a concave shaped bottom to suit the curved surface of the shaft, on which it is used. A keyway is made in the hub of the mounting, with a tapered bottom surface. When a hollow saddle key is fitted in position, the relative rotation between the shaft and the mounting is prevented due to the friction between the shaft and key (Fig. 6.2).

6.2.1.2 Flat Saddle Key

It is similar to the hollow saddle key, except that the bottom surface of it is flat. Apart from the tapered keyway in the hub of the mounting, a flat surface provided on the shaft is used to fit this key in position (Fig. 6.3).

The two types of saddle keys discussed above are suitable for light duty only. However, the flat one is slightly superior compared to the hollow type. Saddle keys are liable to slip around the shaft when used under heavy loads.

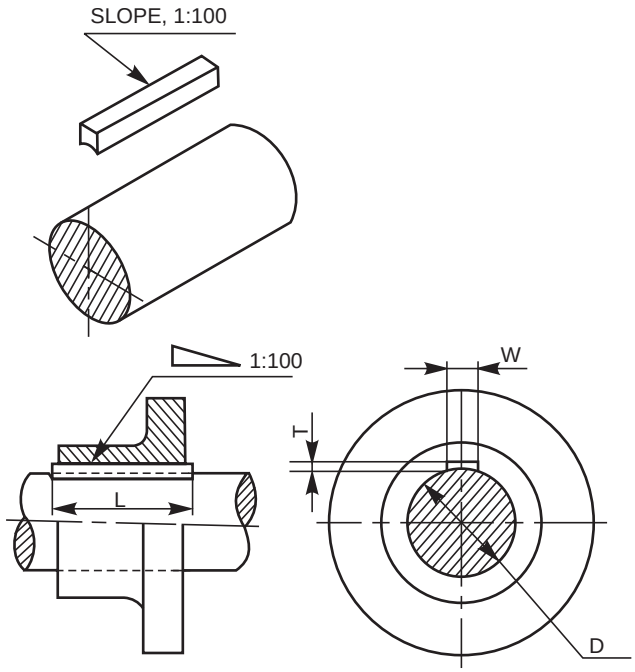

Fig. 6.2 Hollow saddle key

6.2.2 Sunk Keys

These are the standard forms of keys used in practice, and may be either square or rectangular in cross-section. The end may be squared or rounded. Generally, half the thickness of the key fits into the shaft keyway and the remaining half in the hub keyway. These keys are used for heavy duty, as the fit between the key and the shaft is positive.

Sunk keys may be classified as: (*i*) taper keys, (*ii*) parallel or feather keys and (*iii*) woodruff keys.

6.2.2.1 Taper Sunk Keys

These keys are square or rectangular in cross-section, uniform in width but tapered in thickness. The bottom surface of the key is straight and the top surface is tapered, the magnitude of the taper being 1:100. Hence, the keyway in the shaft is parallel to the axis and the hub keyway is tapered (Fig. 6.1).

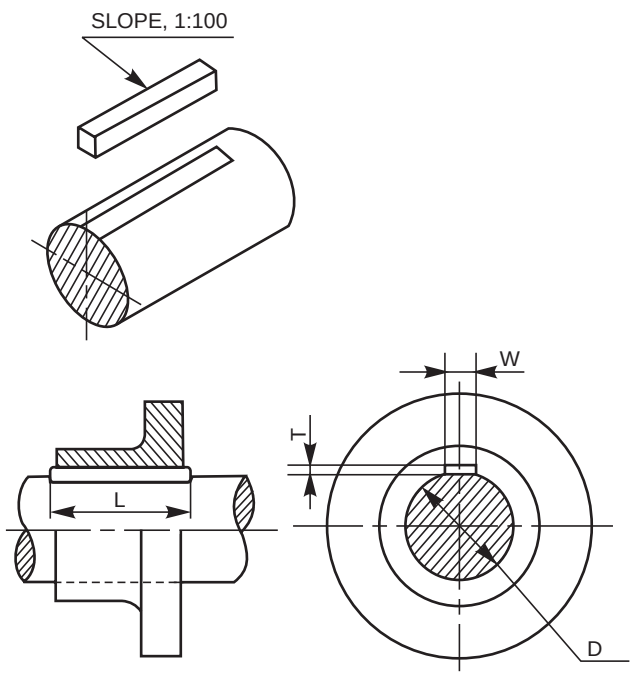

Fig. 6.3 Flat saddle key

www.EngineeringBooksPdf.com

A tapered sunk key may be removed by driving it out from the exposed small end. If this end is not accessible, the bigger end of the key is provided with a head called gib. Figure 6.4 shows the application of a key with a gib head. Following are the proportions for a gib head:

If D is the diameter of the shaft, then,

Width of key, W = 0.25 D + 2 mm

Thickness of key, T = 0.67 W (at the thicker end)

Standard taper = 1:100

Height of head, H = 1.75 T

Width of head, B = 1.5 T

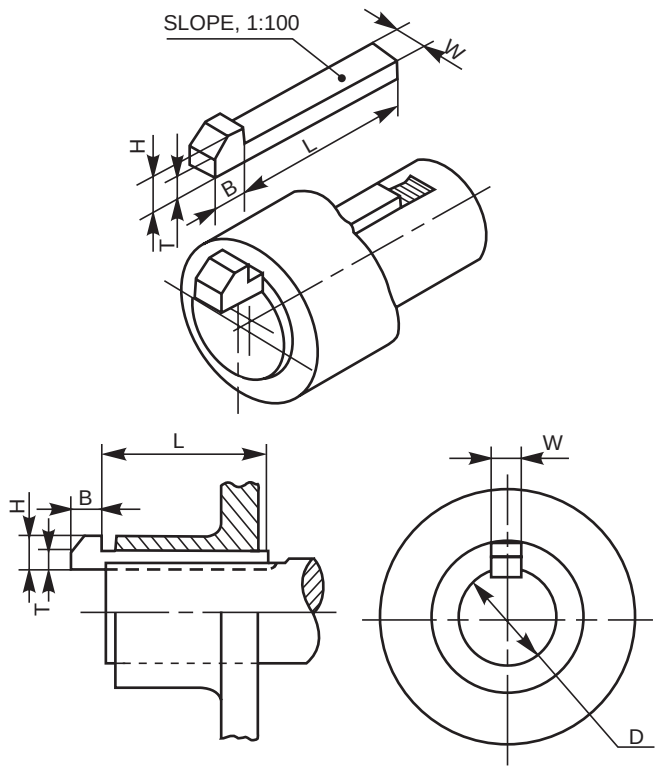

Fig. 6.4 Key with gib head

Table 6.1 gives the dimensions of taper sunk keys, for various shaft sizes.

Table 6.1 Proportions of taper sunk keys for various shaft sizes (contd.)

Shaft diameter (mm)		*Width, W (mm)*	*Thickness, T (average value) (mm)*
Over	*Upto and including*		
6	8	2	2
8	10	3	3
10	12	4	4

www.EngineeringBooksPdf.com

Table 6.1 Proportions of taper sunk keys for various shaft sizes

Shaft diameter (mm)		*Width, W (mm)*	*Thickness, T (average value) (mm)*
Over	*Upto and including*		
12	17	5	5
17	22	6	6
22	30	8	7
30	38	10	8
38	44	12	8
44	50	14	9
50	58	16	10
58	65	18	11
65	75	20	12
75	85	22	14
85	95	25	14
95	110	28	16

6.2.2.2 Parallel or Feather Keys

A parallel or feather key is a sunk key, uniform in width and thickness as well. These keys are used when the parts (gears, clutches, etc.) mounted are required to slide along the shaft; permitting relative axial movement. To achieve this, a clearance fit must exist between the key and the keyway in which it slides.

The feather key may be fitted into the keyway provided on the shaft by two or more screws (Fig. 6.5) or into the hub of the mounting (Fig. 6.6). As seen from Fig. 6.6, these keys are of three types: (*i*) peg feather key, (*ii*) single headed feather key and (*iii*) double headed feather key.

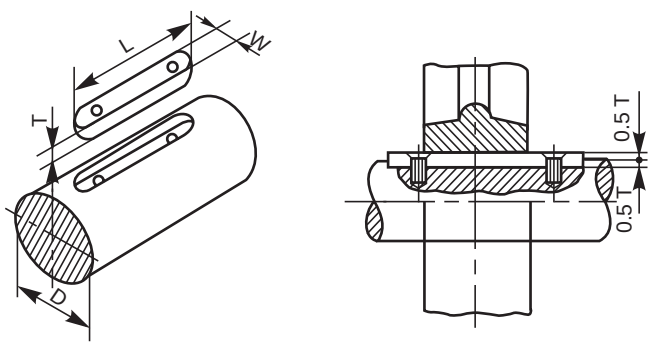

Fig. 6.5 Parallel sunk key

Peg Feather Key

In this key, a projection known as peg is provided at the middle of the key. The peg fits into a hole in the hub of the sliding member (Fig. 6.6 *a*). Once placed in a position, the key and the mounting move axially as one unit.

www.EngineeringBooksPdf.com

Single Headed Feather Key

In this, the key is provided with a head at one end. The head is screwed to the hub of the part mounted on the shaft (Fig. 6.6 *b*).

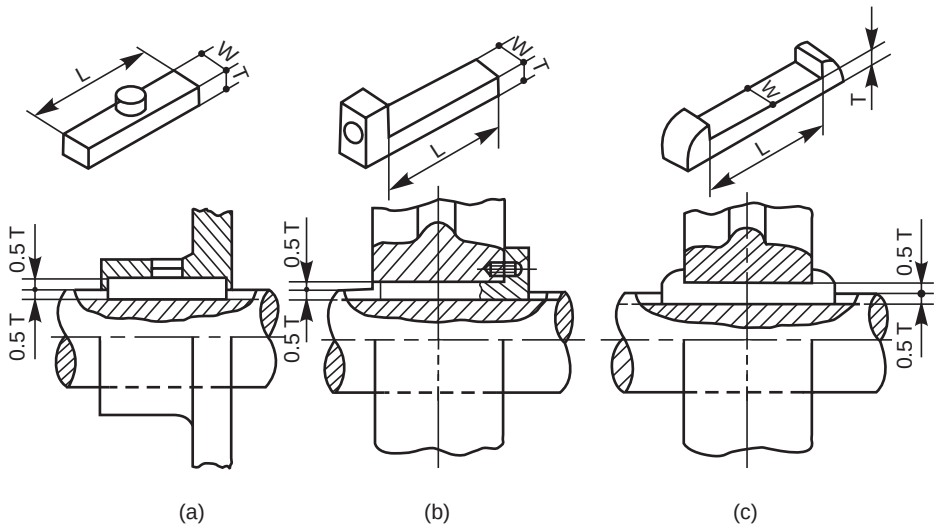

Fig. 6.6 Feather keys

Double Headed Feather Key

In this, the key is provided with heads on both ends. These heads prevent the axial movement of the key in the hub. Here too, once placed in position, the key and the mounting move as one unit (Fig. 6.6 *c*).

6.2.2.3 Splines

Splines are keys made integral with the shaft, by cutting equi-spaced grooves of uniform cross-section. The shaft with splines is called a splined shaft. The splines on the shaft, fit into the corresponding recesses in the hub of the mounting, with a sliding fit, providing a positive drive and at the same time permitting the latter to move axially along the shaft (Fig. 6.7).

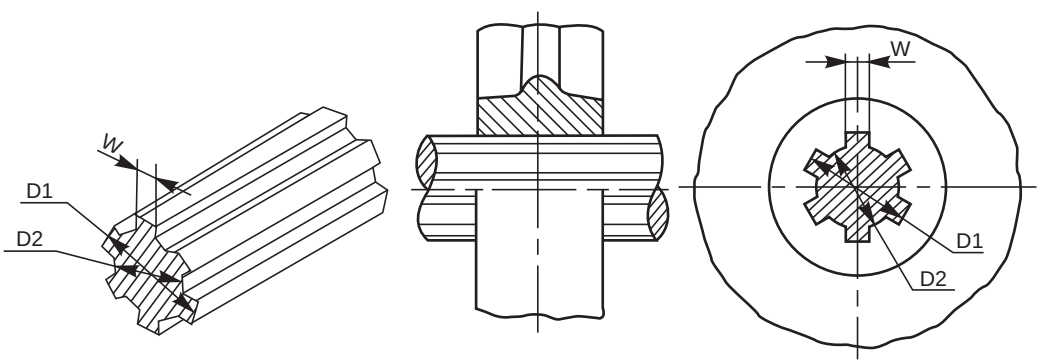

Fig. 6.7 Splined shaft and hub

Table 6.2 gives the proportions for splined shafts of various sizes.

www.EngineeringBooksPdf.com

Table 6.2 Proportions for splined shafts of various sizes

Nominal (major) diameter, D_1 (mm)	*Number of splines*	*Minor (root) diameter, D_2 (mm)*	*Width of spline, W (mm)*
14	6	11	3
16	6	13	3.5
20	6	16	4
22	6	18	5
25	6	21	5
28	6	23	6
32	6	26	6
34	6	28	6
38	8	32	7
42	8	36	7
48	8	42	8
54	8	46	9
60	8	52	10
65	8	56	10
72	8	62	12
82	10	72	12
92	10	82	12
102	10	92	14

6.2.2.4 Woodruff Key

It is a sunk key, in the form of a segment of a circular disc of uniform thickness (Fig. 6.8 *a*). As the bottom surface of the key is circular, the keyway in the shaft is in the form of a circular

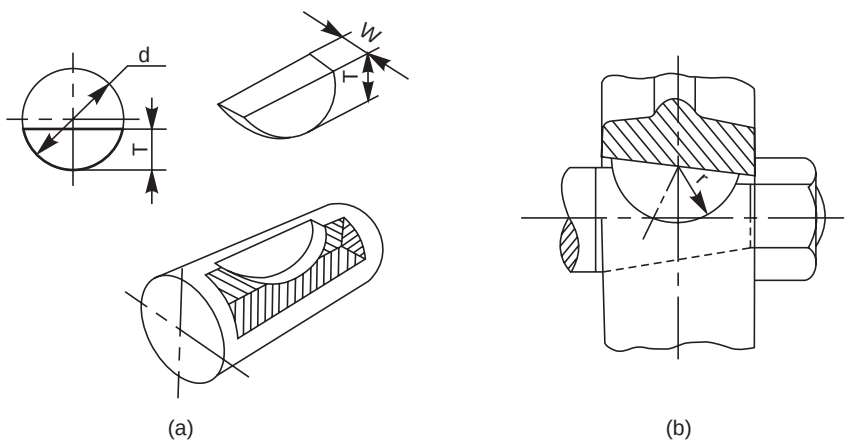

Fig. 6.8 Woodruff key

www.EngineeringBooksPdf.com

recess to the same curvature as the key. A keyway is made in the hub of the mounting, in the usual manner. Woodruff key is mainly used on tapered shafts of machine tools and automobiles. Once placed in position, the key tilts and aligns itself on the tapered shaft (Fig. 6.8 *b*). The following are the proportions of woodruff keys:

If D is the diameter of the shaft,

Thickness of key, W	= 0.25 D
Diameter of key, *d*	= 3 W
Height of key, T	= 1.35 W
Depth of the keyway in the hub, T_1	= 0.5 W + 0.1 mm
Depth of keyway in shaft, T_2	= 0.85 W

6.2.2.5 Round Keys

Round keys are of circular cross-section, usually tapered (1:50) along the length. A round key fits in the hole drilled partly in the shaft and partly in the hub (Fig. 6.9). The mean diameter of the pin may be taken as 0.25 D, where D is shaft diameter. Round keys are generally used for light duty, where the loads are not considerable.

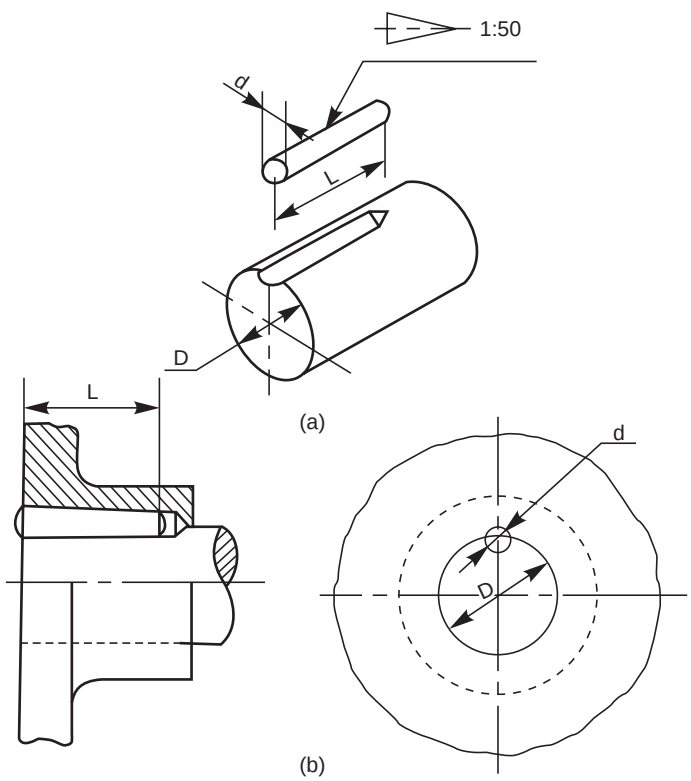

Fig. 6.9 Round key

6.3 COTTER JOINTS

A cotter is a flat wedge shaped piece, made of steel. It is uniform in thickness but tapering in width, generally on one side; the usual taper being 1:30. The lateral (bearing) edges of the cotter and the bearing slots are generally made semi-circular instead of straight (Fig. 6.10).

www.EngineeringBooksPdf.com

This increases the bearing area and permits drilling while making the slots. The cotter is locked in position by means of a screw as shown in Fig. 6.11.

Cotter joints are used to connect two rods, subjected to tensile or compressive forces along their axes. These joints are not suitable where the members are under rotation. The following are some of the commonly used cotter joints:

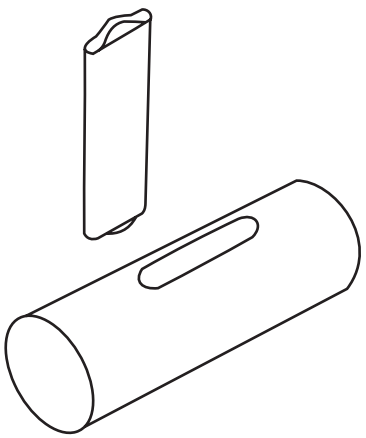

Fig. 6.10 Cotter and the bearing slot

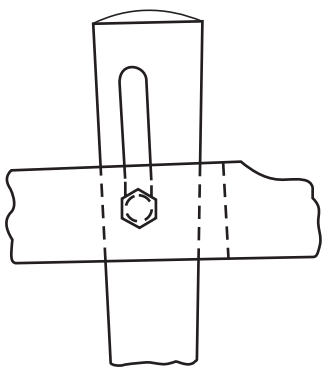

Fig. 6.11 Locking arrangement of cotter

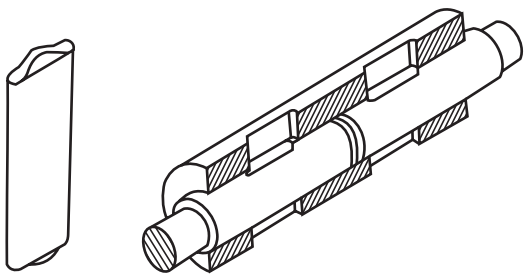

(a) (b)

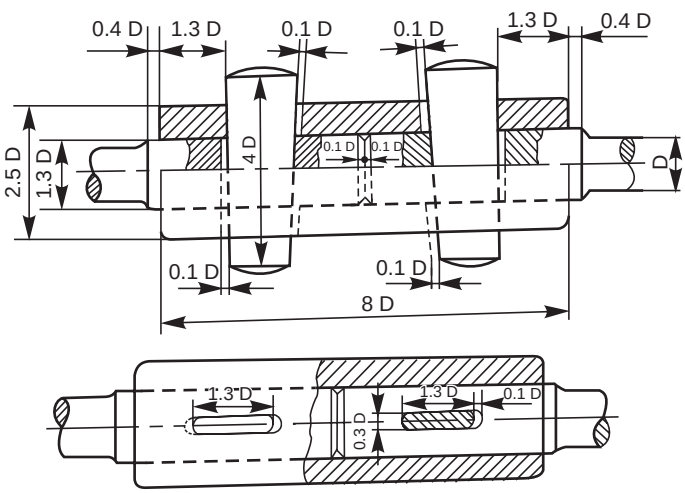

(c)

Fig. 6.12 Cotter joint with sleeve

www.EngineeringBooksPdf.com

6.3.1 Cotter Joint with Sleeve

This is the simplest of all cotter joints, used for fastening two circular rods. To make the joint, the rods are enlarged at their ends and slots are cut. After keeping the rods butt against each other, a sleeve with slots is placed over them. After aligning the slots properly, two cotters are driven-in through the slots, resulting in the joint (Fig. 6.12). The rod ends are enlarged to take care of the weakening effect caused by the slots.

The slots in the rods and sleeve are made slightly wider than the width of cotter. The relative positions of the slots are such, that when a cotter is driven into its position, it permits wedging action and pulls the rod into the sleeve.

6.3.2 Cotter Joint with Socket and Spigot Ends

This joint is also used to fasten two circular rods. In this, the rod ends are modified instead of using a sleeve. One end of the rod is formed into a socket and the other into a spigot (Fig. 6.13) and slots are cut. After aligning the socket and spigot ends, a cotter is driven-in through the slots, forming the joint.

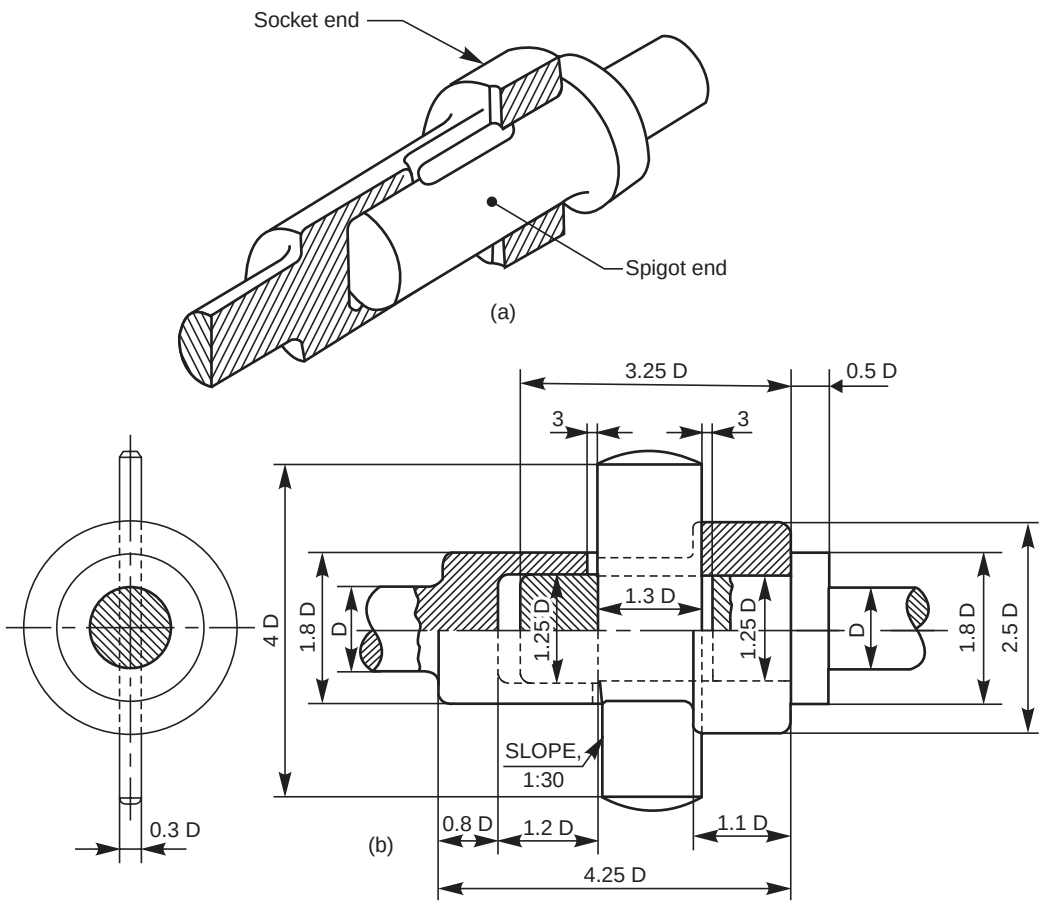

Fig. 6.13 Cotter joint with socket and spigot ends

6.3.3 Cotter Joint with a Gib

This joint is generally used to connect two rods of square or rectangular cross-section. To make the joint, one end of the rod is formed into a U-fork, into which, the end of the other rod fits in.

www.EngineeringBooksPdf.com

When a cotter is driven-in, the friction between the cotter and straps of the U-fork, causes the straps to open. This is prevented by the use of a gib.

A gib is also a wedge shaped piece of retangular cross-section with two rectangular projections called lugs. One side of the gib is tapered and the other straight. The tapered side of the gib bears against the tapered side of the cotter such that, the outer edges of the cotter and gib as a unit are parallel. This facilitates making of slots with parallel edges, unlike the tapered edges in case of ordinary cotter joint. Further, the lugs bearing against the outer surfaces of the fork, prevents the opening tendency of the straps.

Figure 6.14 shows a cotter joint with a gib. For making the joint, first the gib is placed in position and then the cotter is driven-in.

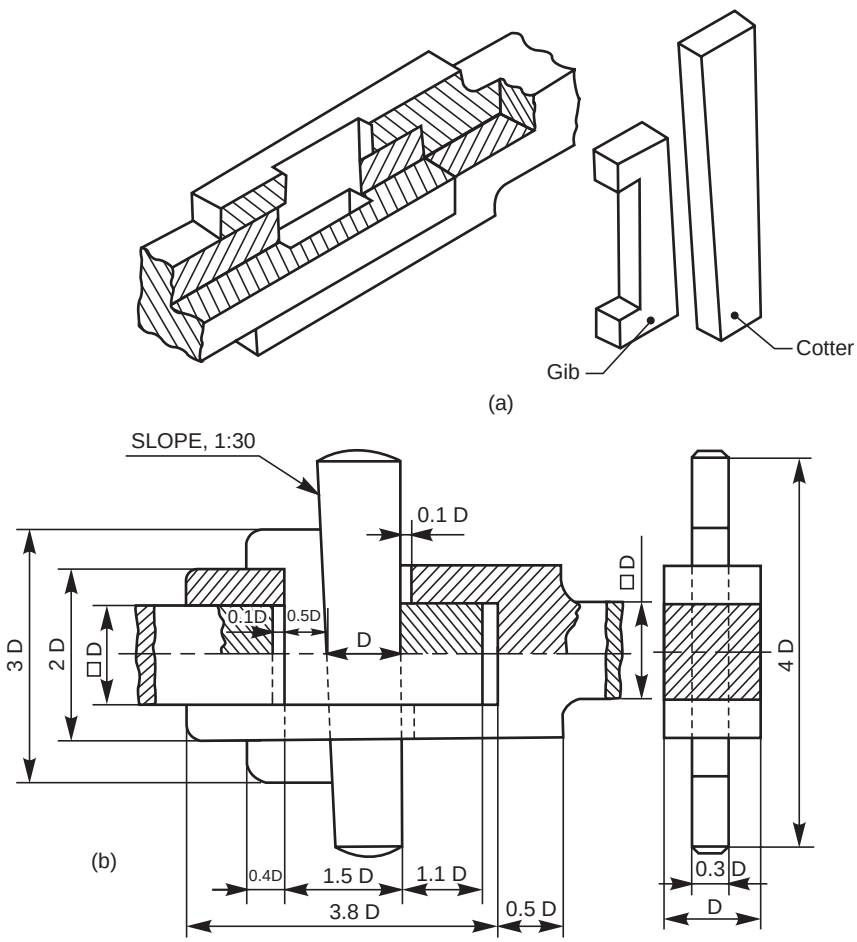

Fig. 6.14 Cotter joint with a gib

6.4 PIN JOINTS

In a pin joint, a pin is used to fasten two rods that are under the action of a tensile force; although the rods may support a compressive force if the joint is guided. Some pin joints such as universal joints, use two pins and are used to transmit power from one rotating shaft to another (the universal joint is discussed under Chapter 7). A pin joint permits a small amount

www.EngineeringBooksPdf.com

of flexibility or one rod may be positioned at an angle (in the plane containing the rods) with respect to the other rod, after providing suitable guides.

Unlike in cotter joints, the pin in a pin joint is not driven-in with a force fit, but is inserted in the holes with a clearance fit. The pin is held in position, by means of a taper pin or a split pin provided at its end.

6.4.1 Knuckle Joint

A knuckle joint is a pin joint used to fasten two circular rods. In this joint, one end of the rod is formed into an eye and the other into a fork (double eye). For making the joint, the eye end of the rod is aligned into the fork end of the other and then the pin is inserted through the holes and held in position by means of a collar and a taper pin (Fig. 6.15). Once the joint is made, the rods are free to swivel about the cylindrical pin.

Knuckle joints are used in suspension links, air brake arrangement of locomotives, etc.

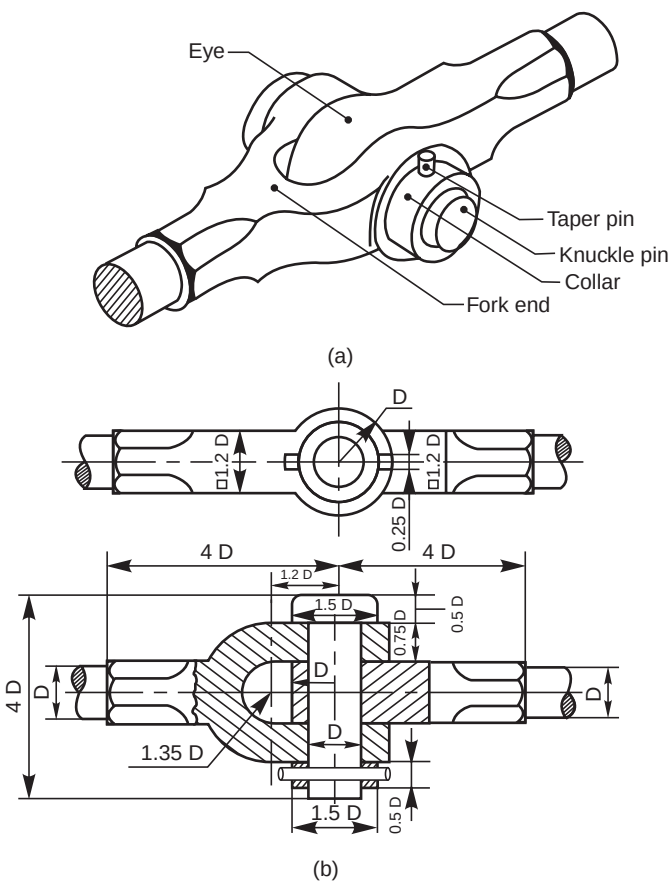

Fig. 6.15 Knuckle joint

THEORY QUESTIONS

6.1 What is a key and what for is it used?

6.2 What is the amount of taper usually provided on the face of a key?

6.3 What is the difference between a saddle key and a sunk key?

www.EngineeringBooksPdf.com

6.4 What is the purpose of providing a head at the end of a taper sunk key ?

6.5 Give the proportions of a gib head, in terms of shaft diameter.

6.6 Where and why the woodruff key is used?

6.7 What is a feather key and what are its uses?

6.8 What is a cotter and when is it used? What is the purpose of using a gib along with a cotter in a cotter joint?

6.9 What is a knuckle joint and where is it used? What is the difference between the eye end and fork end of a knuckle joint?

6.10 Why clearances are provided in cotter joints ? Differentiate between cotter joint and pin joint?

DRAWING EXERCISES

6.1 Sketch the various methods of fitting a feather key in position.

6.2 Sketch the following types of keys in two views, as fitted in position between a shaft and the mounting. Choose the shaft diameter as 30 mm and the hub diameter of the mounting as 60 mm:

(*a*) hollow saddle key, (*b*) flat saddle key,
(*c*) taper sunk key, (*d*) single headed feather key,
(*e*) splines and (*f*) woodruff key.

6.3 Draw the sectional view from the front, and view from the side of a cotter joint with sleeve used to connect two rods of 50 mm diameter each.

6.4 Draw the half sectional view from the front, with top half in section and the view from the side of a cotter joint with socket and spigot ends, to connect two rods of 50 mm diameter each.

6.5 Two square rods of side 50 mm each, are connected by a cotter joint with a gib. Sketch the following views of the assembly :

(*a*) half sectional view from the front and (*b*) view from the side.

www.EngineeringBooksPdf.com

SHAFT COUPLINGS

7

7.1 INTRODUCTION

Shaft couplings are used to join or connect two shafts in such a way that when both the shafts rotate, they act as one unit and transmit power from one shaft to the other. Shafts to be connected or coupled may have collinear axes, intersecting axes or parallel axes at a small distance. Based on the requirements, the shaft couplings are classified as: (*i*) rigid couplings, (*ii*) flexible couplings, (*iii*) loose or dis-engaging couplings and (*iv*) non-aligned couplings.

7.2 RIGID COUPLINGS

Rigid shaft couplings are used for connecting shafts having collinear axes. These are further sub-classified into muff or sleeve couplings and flanged couplings.

7.2.1 Sleeve or Muff Couplings

This is the simplest of all couplings. It consists of a sleeve called muff, generally made of cast iron, which is fitted over the ends of the shafts to be connected. After properly aligning the keyways in the shafts and sleeve, a sunk key is driven-in; thus making the coupling. Instead of a single key running the entire length of the sleeve, it is desirable to use two keys, which may be inserted from the outer ends of the sleeve; thus overcoming the possible mis-alignment between the keyways. The following are the types of muff couplings:

7.2.1.1 Butt-muff Coupling

In this, the ends of the two shafts to be coupled butt against each other, with the sleeve keyed to them, as discussed above (Fig.7.1).

7.2.1.2 Half-lap Muff Coupling

In this, the ends of the shafts overlap each other for a short length. The taper provided in the overlap prevents the axial movement of the shafts. Here too, after placing the muff over the overlapping ends of the shafts, a saddle key(s) is(are) used to make the coupling (Fig. 7.2).

7.2.1.3 Split-muff Coupling

In this, the muff is split into two halves and are recessed. A number of bolts and nuts are used to connect the muff halves and the recesses provided accommodate the bolt heads and nuts.

For making the coupling, a sunk key is first placed in position and then the muff halves are joined by bolts and nuts (Fig. 7.3). This type of coupling is used for heavy duty work, since both the key and friction grip transmit the power (torque).

www.EngineeringBooksPdf.com

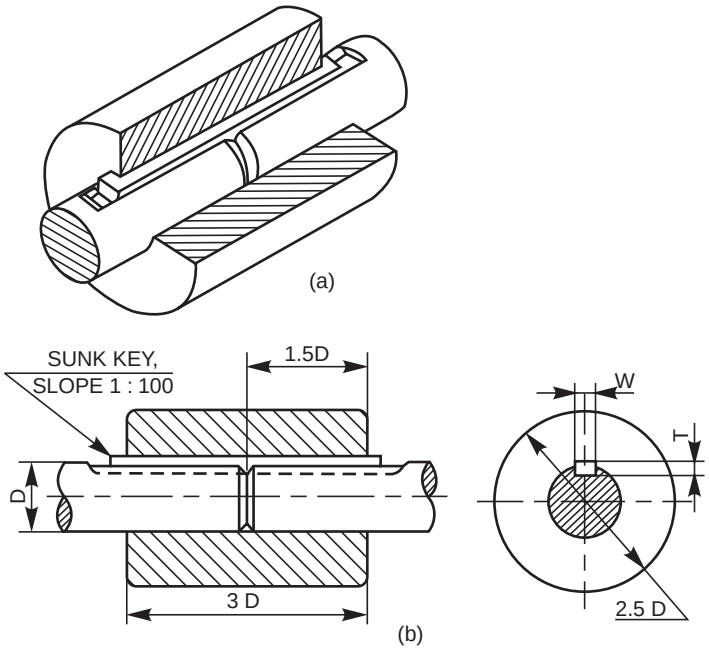

Fig. 7.1 Butt-muff coupling

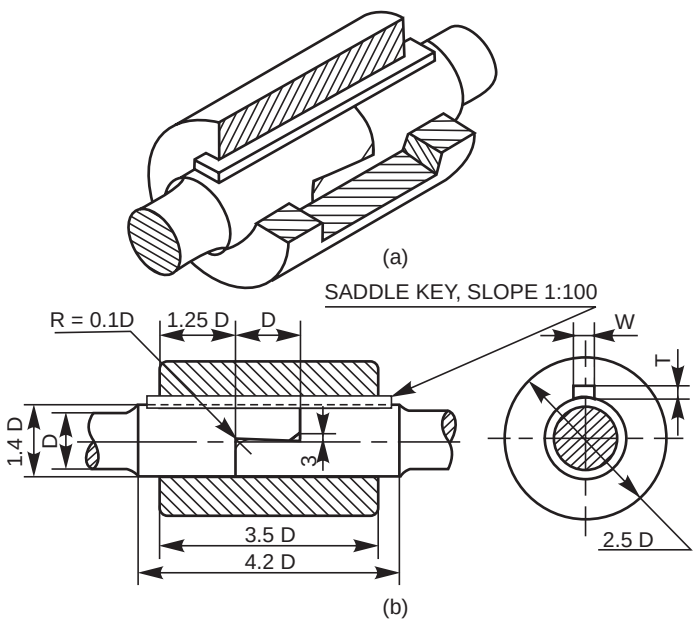

Fig. 7.2 Half-lap muff coupling

www.EngineeringBooksPdf.com

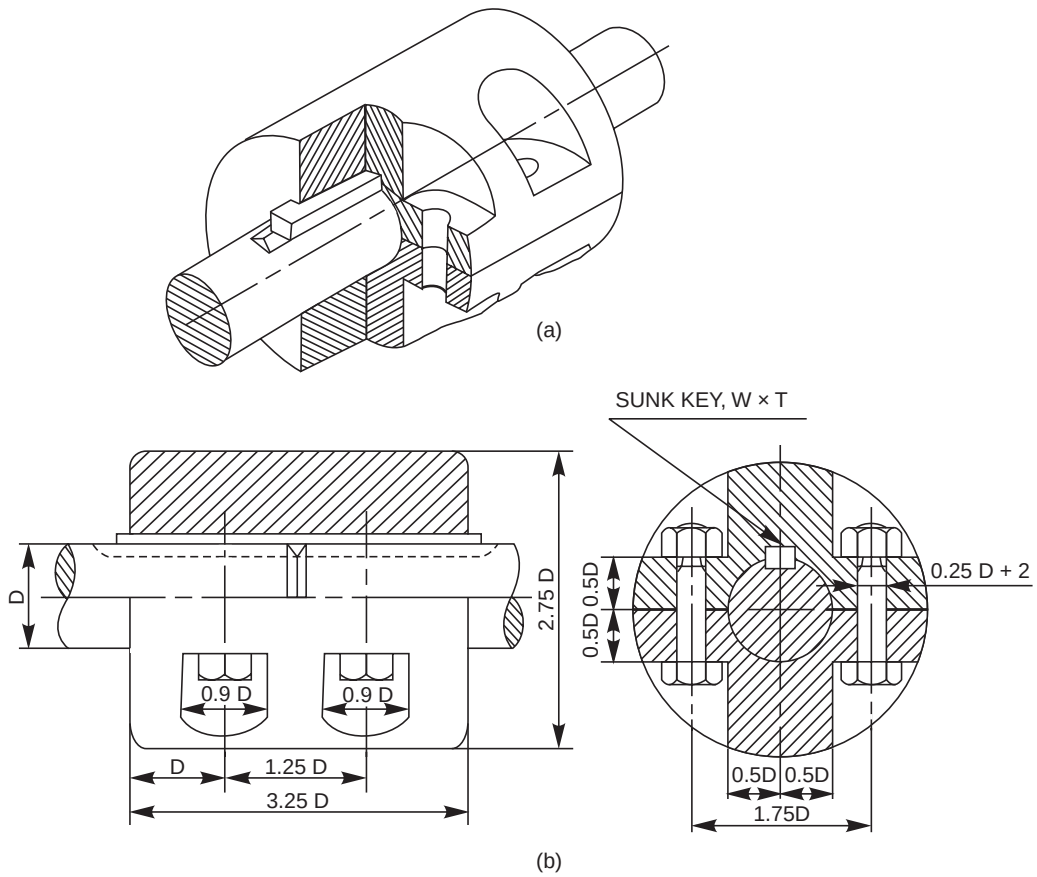

Fig. 7.3 Split-muff coupling

7.2.2 Flanged Couplings

These are the standard forms of couplings, most extensively used. In a flanged coupling, flanges are either fitted or provided at the ends of shafts. The flanges are fastened together by means of a number of bolts and nuts. The number and size of the bolts depend upon the power to be transmitted and hence, the shaft diameter.

7.2.2.1 Flanged Coupling with Detachable Flanges

In this, two flanges are keyed, one at the end of each shaft, by means of sunk keys (Fig. 7.4). For ensuring correct alignment, a cylindrical projection may be provided on one flange which fits into the corresponding recess in the other.

In the design shown in figure, the bolt heads and nuts are exposed and liable to cause injury to the workman. Hence, as a protection, the bolt heads and nuts may be covered by providing an annular projection on each flange. A flanged coupling, using these flanges is called a protected flanged coupling (Fig. 7.5).

7.2.2.2 Solid Flanged Coupling

Couplings for marine or automotive propeller shafts demand greater strength and reliability. For these applications, flanges are forged integral with the shafts. The flanges are joined together by means of a number of headless taper bolts (Fig. 7.6).

www.EngineeringBooksPdf.com

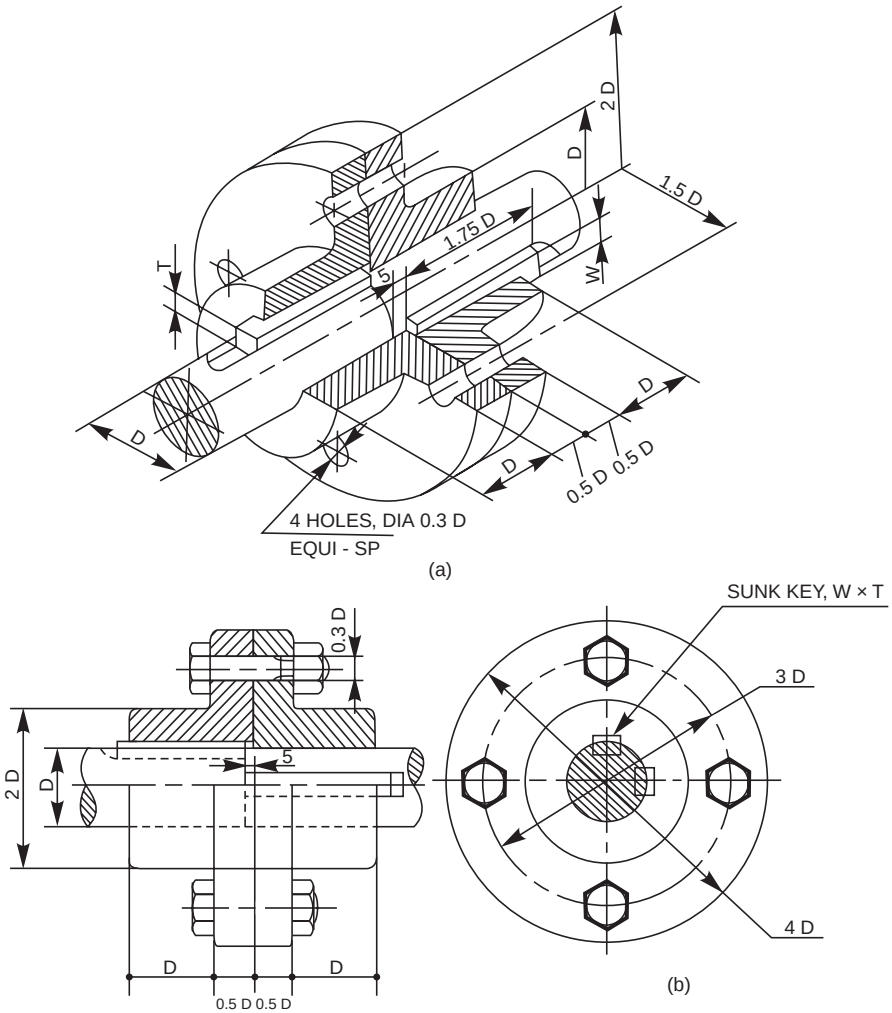

Fig. 7.4 Flanged coupling

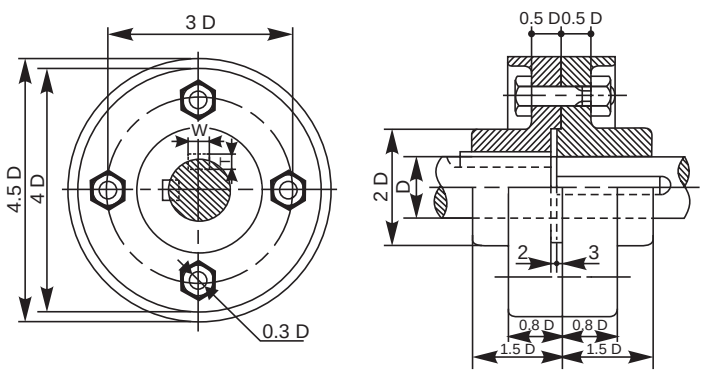

Fig. 7.5 Protected flanged coupling

www.EngineeringBooksPdf.com

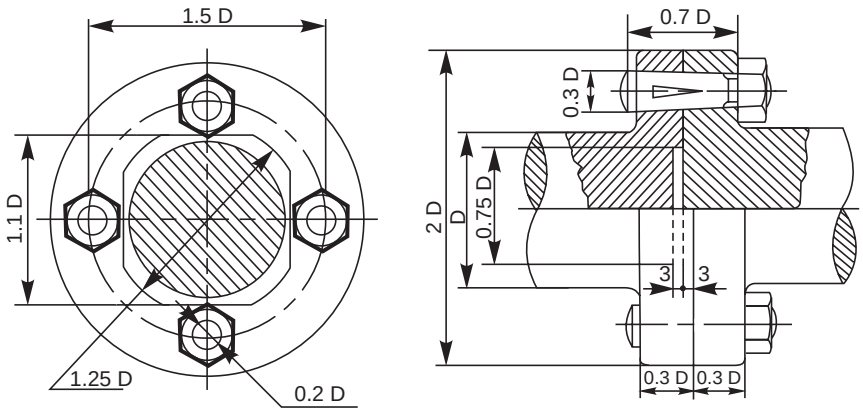

Fig. 7.6 Solid flanged coupling

7.3 FLEXIBLE COUPLINGS

Perfect alignment of two shafts is impossible to achieve and difficult to maintain, because of inevitable bearing wear and other reasons. To overcome the trouble, flexible couplings are employed. These permit relative rotation or variation in the alignment of shaft axes within certain limits. The following are the types of flexible couplings:

7.3.1 Bushed Pin Type Flanged Coupling

It is the modified version of a protected flanged coupling. In this, bolts are replaced by bushed pins. The smaller ends of the pins are rigidly fastened by nuts to one of the flanges, while the enlarged ends are covered with flexible material like leather or rubber bushes, in the other flange (Fig. 7.7). The flexible medium takes care of mis-alignment, if any, and acts as a shock absorber. These couplings are used to connect prime mover or an electric motor and a centrifugal pump.

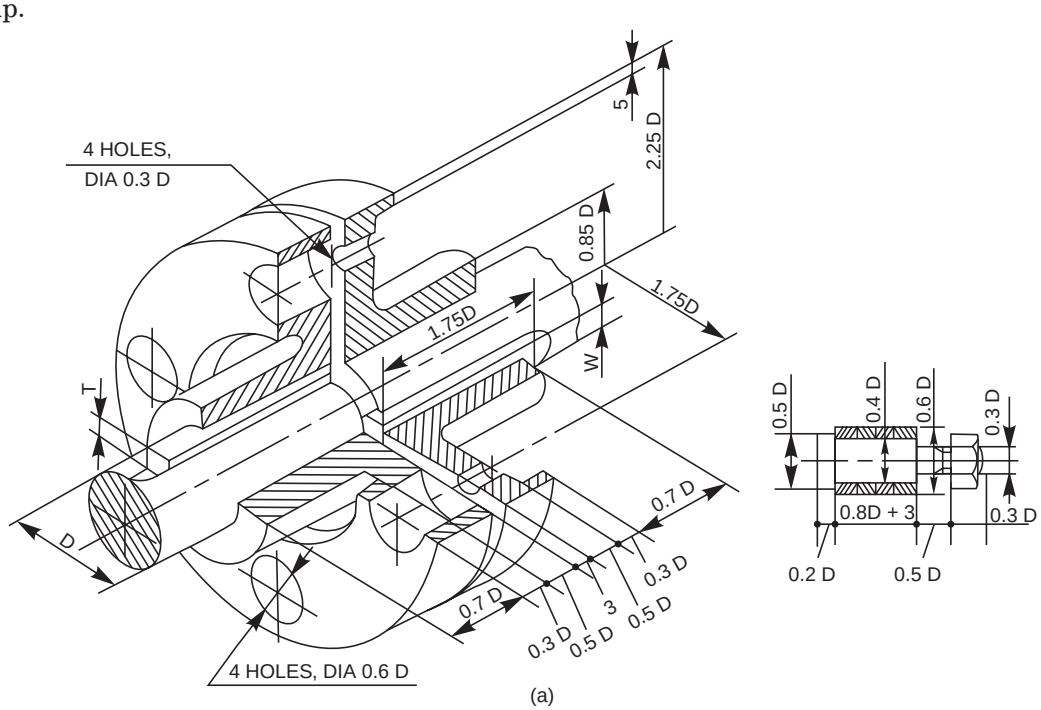

(a)

Fig. 7.7 Bushed pin type flanged coupling (*Contd.*)

www.EngineeringBooksPdf.com

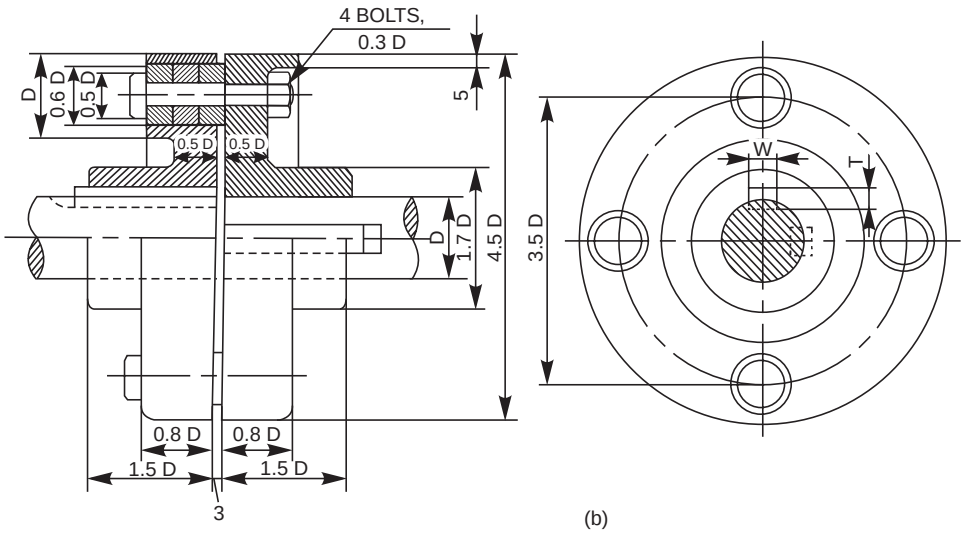

Fig. 7.7 Bushed pin type flanged coupling

7.3.2 Compression Coupling

This consists of a compressible steel sleeve which fits on to the ends of the shafts to be coupled. The sleeve corresponds to the shaft diameter and its outer surface is of double conical form. The sleeve has one through cut longitudinally and five other cuts, equi-spaced, but running alternately from opposite ends to about 85% of its length; making it radially flexible.

The two flanges used have conical bores and are drawn towards each other by means of a number of bolts and nuts, making the sleeve firmly compressed onto the shafts. Here, the friction between the shafts and sleeve assists power transmission and the bolts do not take any load. Because of the presence of flexible sleeve, the coupling takes care of both axial and angular mis-alignment of shafts (Fig. 7.8).

7.4 DIS-ENGAGING COUPLINGS

Disengaging couplings are used when power transmission from one shaft to another is intermittent. With this, the shafts can be engaged or disengaged as and when required, even during rotation. A dis-engaging coupling in general consists of one part firmly fixed to the driving shaft and another one mounted with provision for sliding over the driven shaft. The part that is mounted on the driven shaft, can be made to slide at will to engage or dis-engage from the rotating driving shaft. The following are the examples of dis-engaging couplings.

7.4.1 Claw Coupling

In this, each flange has a number of identical claws which engage into the corresponding recesses in the flange. One flange is firmly fitted to the driving shaft by means of a taper sunk key. The other one is placed over the driven shaft by two feather keys, so that it can slide freely on it. The sliding flange has a groove on the boss, into which the forked end of a lever fits. By operating the lever, the sliding flange may be moved so as to engage with or dis-engage from the fixed flange (Fig. 7.9). This type of coupling is generally used on slow speed shafts.

www.EngineeringBooksPdf.com

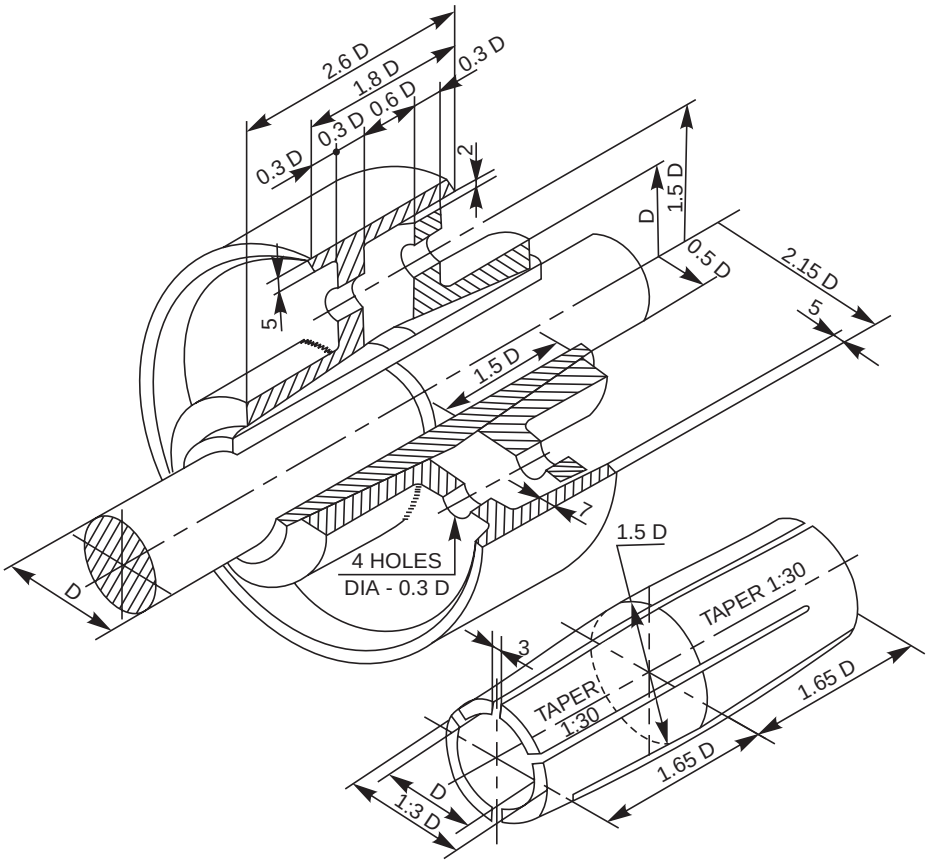

(a)

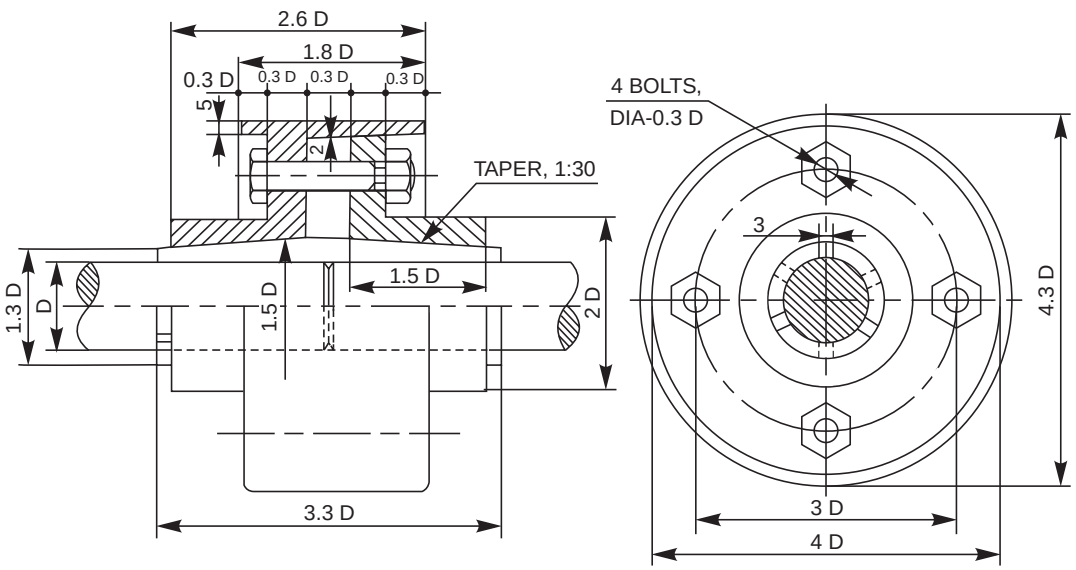

(b)

Fig. 7.8 Compression coupling

www.EngineeringBooksPdf.com

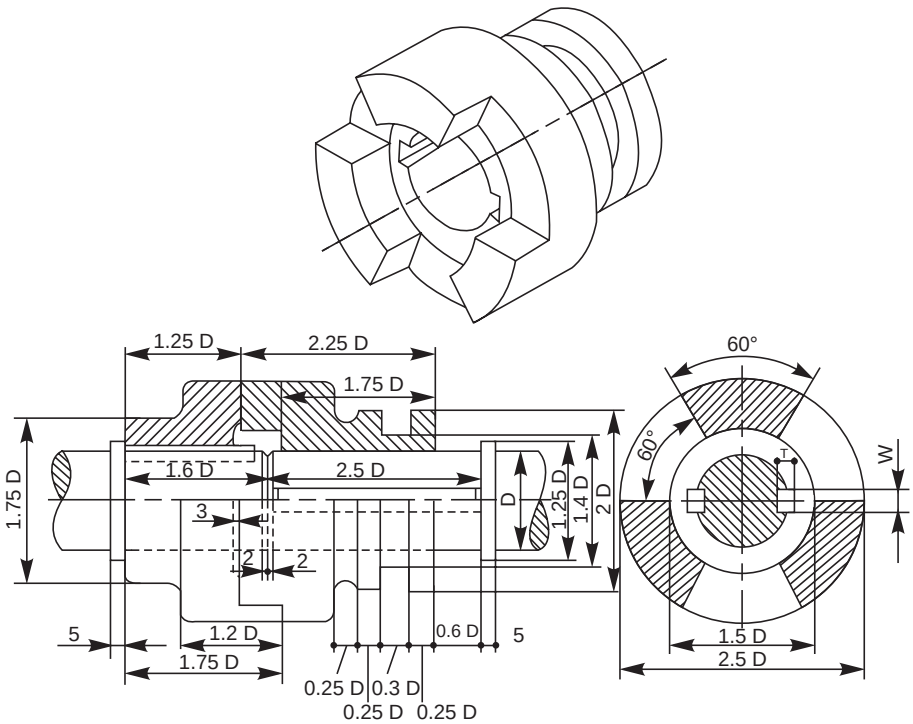

Fig. 7.9 Claw coupling

7.4.2 Cone Coupling

In this, two shafts may be coupled together by means of two flanges with conical surfaces (on the inside of one and on the outside of the other) by virtue of friction. Here too, one flange is firmly fitted to the driving shaft by means of a taper sunk key, whereas the other slides freely over a feather key fitted to the driven shaft. The sliding flange may be moved by means of a forked lever fitted into the groove provided on it. (Fig. 7.10).

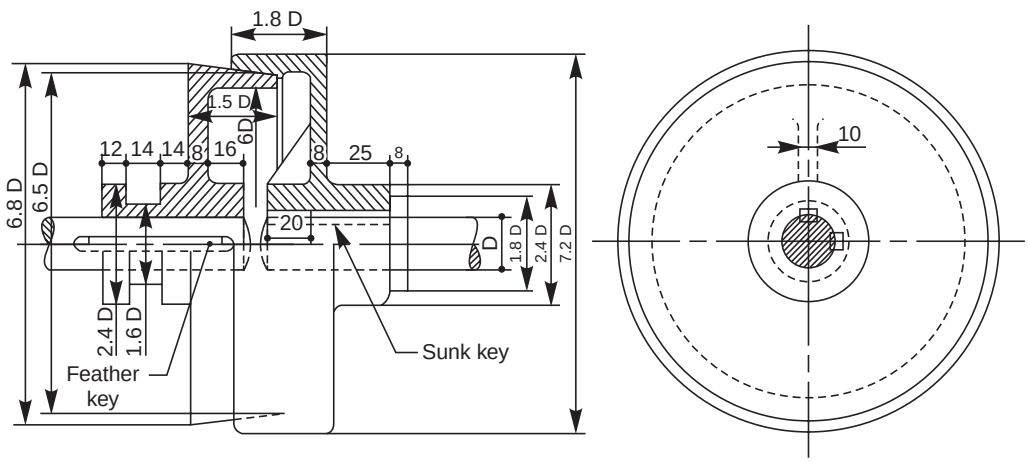

Fig. 7.10 Cone coupling

www.EngineeringBooksPdf.com

7.5 NON-ALIGNED COUPLINGS

Non-aligned couplings are used to transmit power between two shafts which are not coaxial. The following are the examples of non-aligned couplings:

7.5.1 Universal Coupling (Hooke's Joint)

It is a rigid coupling that connects two shafts, whose axes intersect if extended. It consists of two forks which are keyed to the shafts. The two forks are pin joined to a central block, which has two arms at right angle to each other in the form of a cross (Fig. 7.11). The angle between the shafts may be varied even while the shafts are rotating.

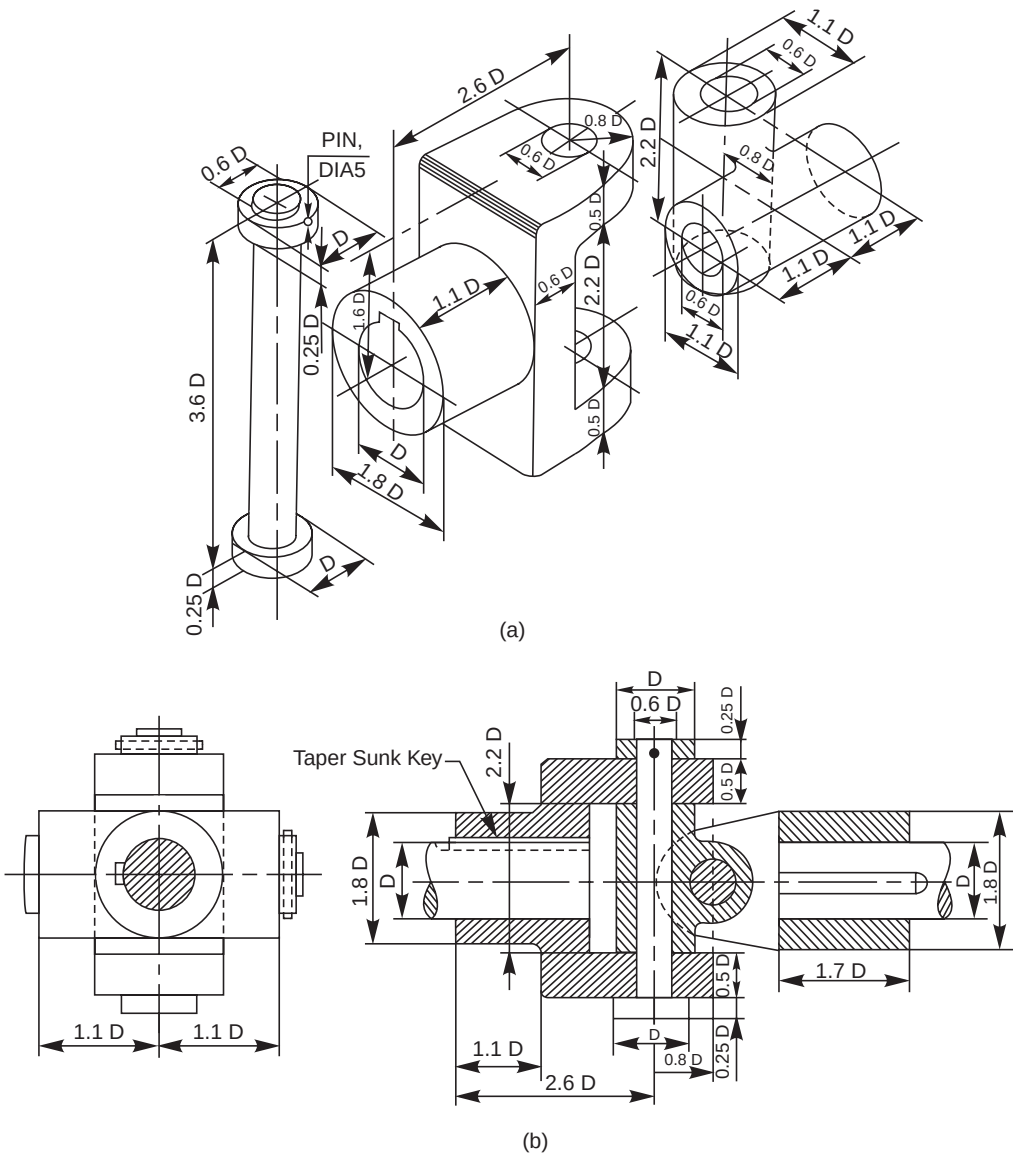

Fig. 7.11 Universal coupling

www.EngineeringBooksPdf.com

7.5.2 Oldham Coupling

It is used to connect two parallel shafts whose axes are at a small distance apart. Two flanges, each having a rectangular slot, are keyed, one on each shaft. The two flanges are positioned such that, the slot in one is at right angle to the slot in the other.

To make the coupling, a circular disc with two rectangular projections on either side and at right angle to each other, is placed between the two flanges. During motion, the central disc, while turning, slides in the slots of the flanges. Power transmission takes place between the shafts, because of the positive connection between the flanges and the central disc (Fig. 7.12).

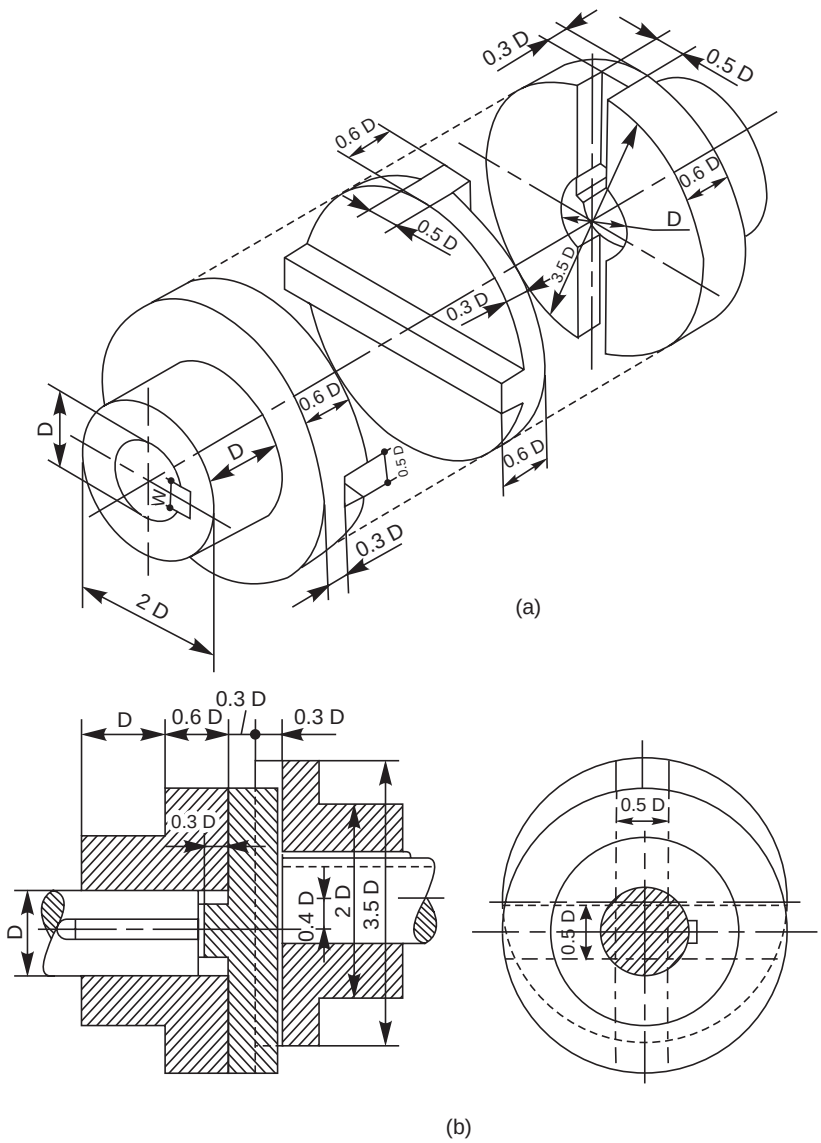

Fig. 7.12 Oldham coupling

www.EngineeringBooksPdf.com

7.5.3 Cushion Coupling

One of the most commonly used flexible couplings now-a-days is the cushion coupling. The H.P rating of these couplings for various speeds, range from 0.2 to 450.

The tyre of the coupling is made of natural and synthetic rubber, impregnated with canvas or rayon. The hubs are made of C I or steel (Fig. 7.13).

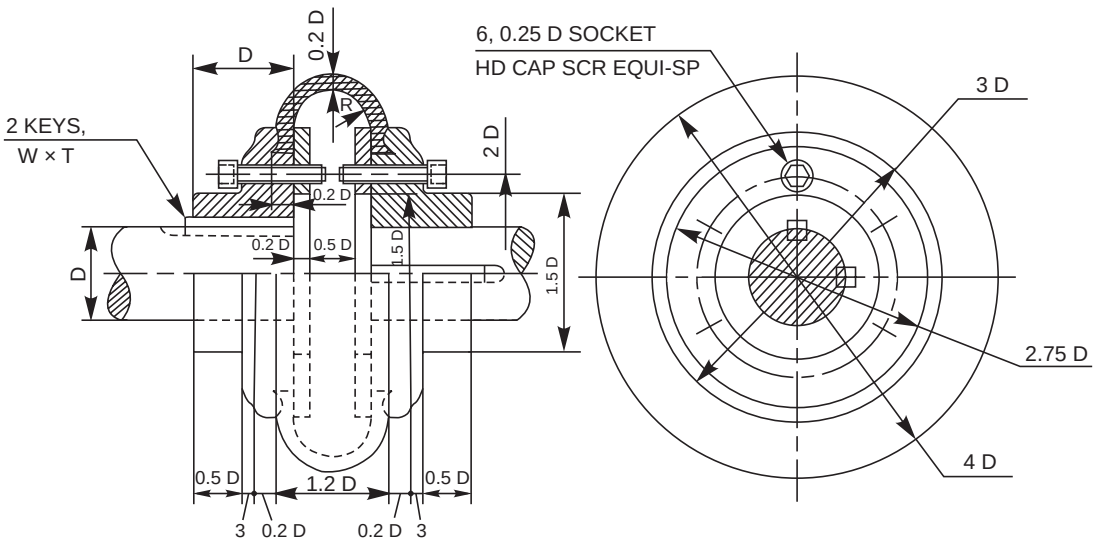

Fig. 7.13 Cushion coupling

THEORY QUESTIONS

7.1 What is a shaft coupling?

7.2 Name different types of shaft couplings. What is the basis, on which shaft couplings are classified?

7.3 Name three types of rigid shaft couplings. State why they are called rigid.

7.4 State where and why split-muff coupling is used in preference to solid muff coupling.

7.5 What is a flange coupling and why is it so named ?

7.6 Why are the annular recesses provided at the side of flanges in a protected flange coupling?

7.7 How flanges are made in a marine coupling?

7.8 What are the uses of a flexible coupling ?

7.9 What is a universal coupling? Why it is so named?

7.10 Describe how a compression coupling transmits power from one shaft to another.

7.11 Differentiate between:

(*a*) Butt-muff coupling and half-lap muff coupling,

(*b*) Rigid coupling and flexible coupling,

(*c*) Flange coupling and flexible coupling,

(*d*) Bushed pin type flange coupling and cushion coupling, and

(*e*) Cone coupling and claw coupling.

www.EngineeringBooksPdf.com

DRAWING EXERCISES

7.1 Sketch the sectional view from the front and view from the side of a butt-muff coupling; indicating proportions for connecting two shafts, each of diameter 30 mm.

7.2 Draw (*a*) half sectional view from the front, top half in section and (*b*) half sectional view from the side, left half in section, of a split-muff coupling, indicating proportions to connect two shafts, each of diameter 50 mm.

7.3 Draw (*a*) half sectional view from the front, top half in section and (*b*) view from the side of a rigid flange coupling to connect two shafts, each of diameter 30 mm. Sketch the above views for the protected type of flange coupling.

7.4 Sketch the required views, indicating the proportions of a solid flange coupling used in marine engines to connect two shafts, each of diameter 60 mm.

7.5 Draw (*a*) half sectional view from the front, top half in section and (*b*) view from the side of a bushed pin type flange coupling, indicating proportions to connect two shafts, each of diameter 30 mm.

7.6 Sketch the required views, indicating proportions of (*a*) compression-muff coupling, (*b*) cone coupling and (*c*) claw coupling, to connect two shafts, each of diameter 30 mm.

7.7 Draw (*a*) sectional view from the front and (*b*) view from the side of a universal coupling, indicating proportions, to connect two shafts, each of diameter 40 mm.

7.8 Sketch the required views of (*a*) oldham coupling and (*b*) cushion coupling, indicating proportions, used to connect two shafts, each of diameter 30 mm.

www.EngineeringBooksPdf.com

8

PIPE JOINTS

8.1 INTRODUCTION

Pipes are used for carrying fluids such as water, steam, gas, oil, etc., from one place to another. As pipes are made in standard lengths, the desired length of a pipe may be obtained by joining them. The type of joint used depends upon the material of the pipe and the purpose for which it is used.

Generally, pipes are made of cast iron, wrought iron, steel, brass or copper. The material selection is based on the nature of the fluid to be conveyed, viz., pressure, temperature, chemical properties, etc. Now-a-days PVC pipes are extensively used with ease for various purposes.

In practice, a pipe size is designated by its bore diameter, called as nominal diameter. Figure 8.1 shows the details of standard pipe thread and Fig. 8.2, the conventional representation of pipe threads.

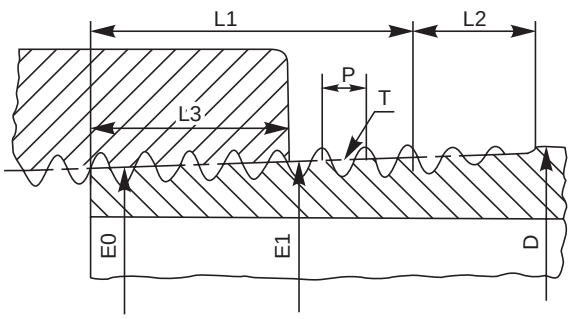

L1 – Effective thread
L2 – Imperfect thread
L3 – Normal engagement by hand
P – Pitch
T – Taper 1 : 16 measured on dia.
E0 – Pitch diameter at end of pipe
E1 – Pitch diameter at large end of internal thread

Fig. 8.1 Standard pipe threads

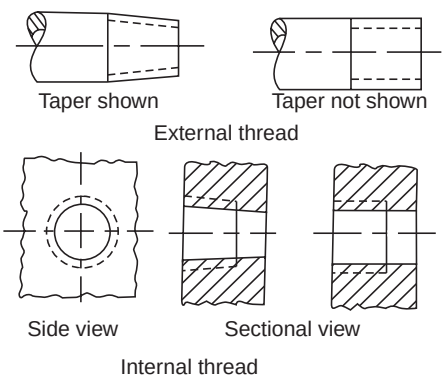

Fig. 8.2 Conventional representation of pipe threads

8.2 JOINTS FOR STEAM PIPES

These joints are used for the pipes carrying fluids under high temperature and pressure. Based on the pipe materials, these are classified into cast iron pipes, copper pipes, steel pipes, etc.

www.EngineeringBooksPdf.com

8.2.1 Joints for Cast Iron Pipes

Cast iron pipes are produced with flanges, integral with the pipe ends. To ensure alignment and seating, the flange faces are machined. Further, to make the joint air tight, a thin disc of packing material, such as rubber or leather, is placed between the flanges and are joined by means of a number of bolts and nuts (Fig. 8.3*a*).

If greater strength is required for high pressure duty, the thickness of the pipe may be slightly increased near the flange (Fig. 8.3*b*). For larger diameter pipes, under high pressures, the flanges are strengthened by means of cast ribs. (Fig. 8.3*c*).

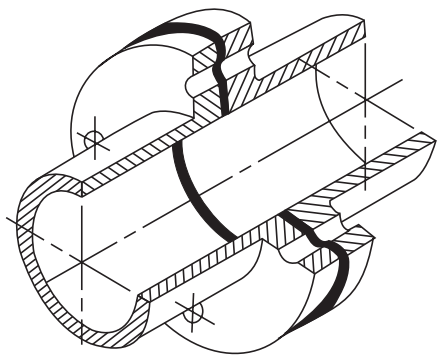

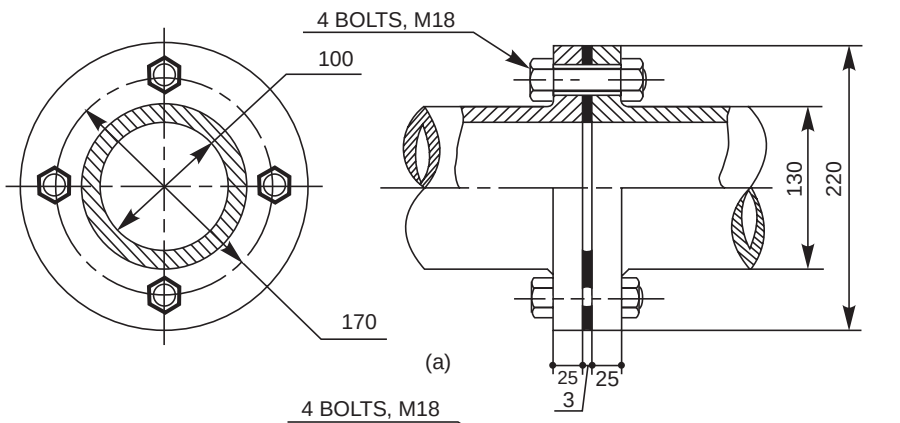

(a)

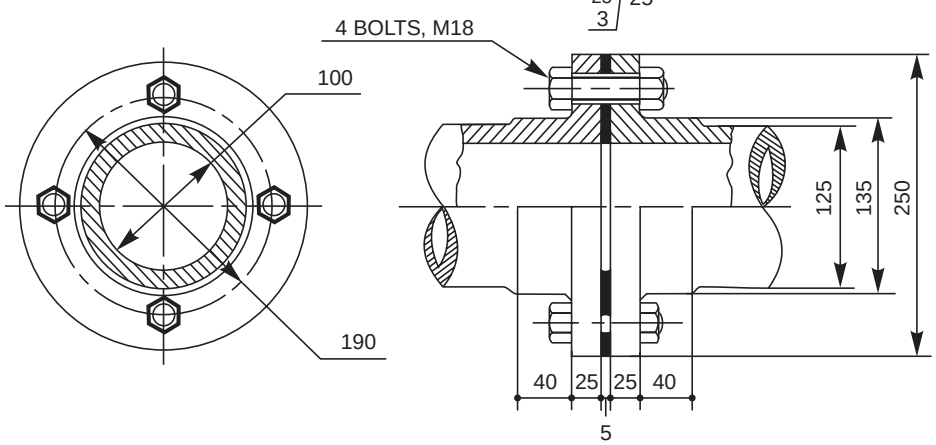

(b)

Fig. 8.3 Cast iron pipe joints (*Contd.*)

www.EngineeringBooksPdf.com

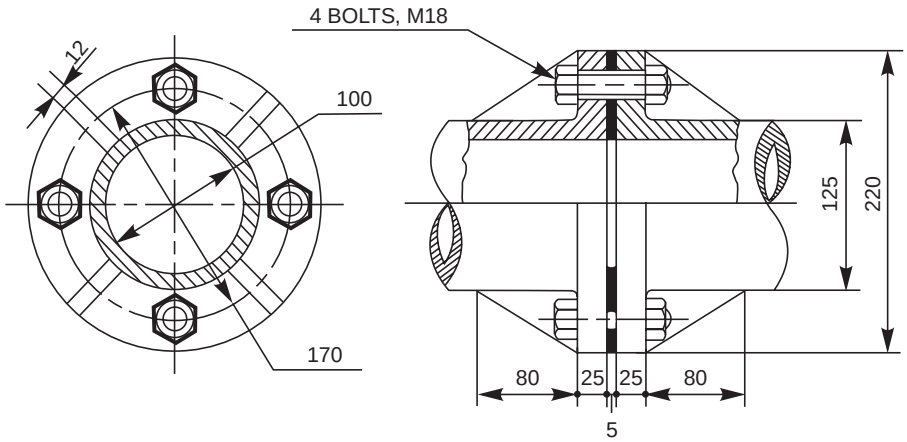

(c)

Fig. 8.3 Cast iron pipe joints

8.2.2 Joints for Copper Pipes

Copper pipes are usually solid drawn. Separate flanges, made of gunmetal for smaller pipes and steel or wrought iron for larger pipes are attached to the pipe ends by brazing. The joint is obtained by means of a number of bolts and nuts (Figs. 8.4*a* and *b*).

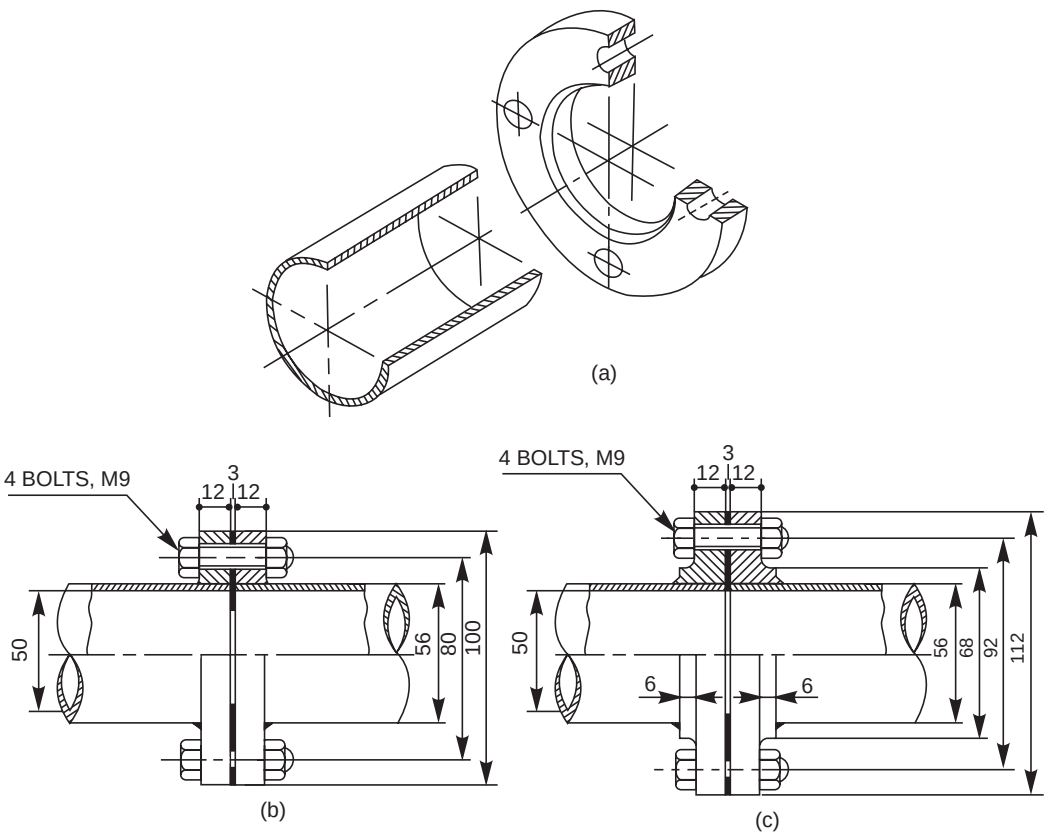

Fig. 8.4 Copper pipe joints

www.EngineeringBooksPdf.com

Copper pipes are used as feed and drain pipes in steam engines, as steam pipes in marine engines and also for refrigeration coils.

Figure 8.4*c* shows the joint, with flanges strengthened by providing hubs, ensuring better hold on the pipes.

8.2.3 Joints for Wrought Iron and Steel Pipes

In the simplest form of a joint, as shown in Fig. 8.5*a*, flanges are formed at the end of each pipe, which are fastened by means of bolts and nuts. This joint is similar to a cast iron flanged joint.

In the other form of a joint, flanges made of cast iron or cast steel are screwed onto the ends of solid drawn wrought iron or steel pipes. The flanges are fastened by means of bolts and nuts (Fig. 8.5*b*).

Wrought iron pipes are made in relatively smaller sizes, which are usually galvanised all over. Solid drawn steel pipes have greater strength and are used for carrying fluids under high pressure.

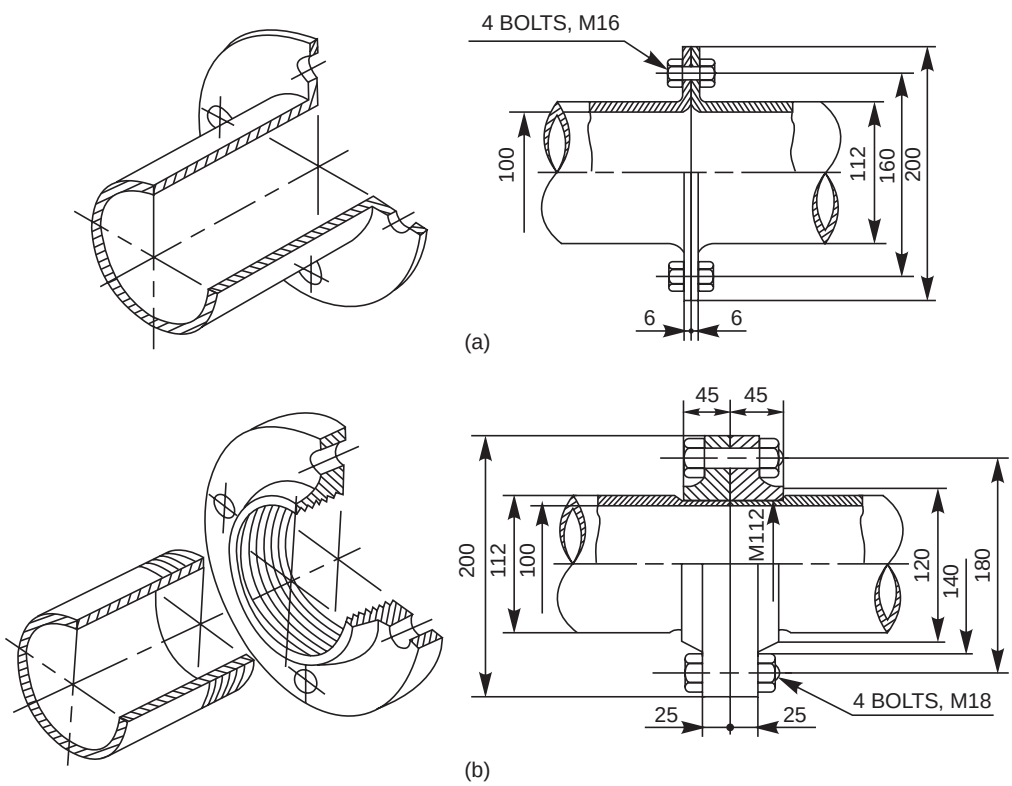

Fig. 8.5 Wrought iron and steel pipe joints

8.3 JOINTS FOR HYDRAULIC PIPES

Hydraulic pipes are used to carry liquids such as water, oil, sewage, etc., under pressure but at normal temperatures. Depending upon the purpose, these pipes may be laid either above the ground or beneath it. The following are some of the common types of hydraulic joints:

www.EngineeringBooksPdf.com

8.3.1 Socket and Spigot Joint

This type of joint is used for underground pipelines of large diameters. In this, one end of a pipe is made into a socket and the other end into a spigot. After placing the spigot end into the socket, the space between them is filled-in, partly by rope (jute or coir) and the remaining by molten lead (Fig. 8.6).

Because of the flexible nature of the joint, it adapts itself to small changes in level due to settlement of earth.

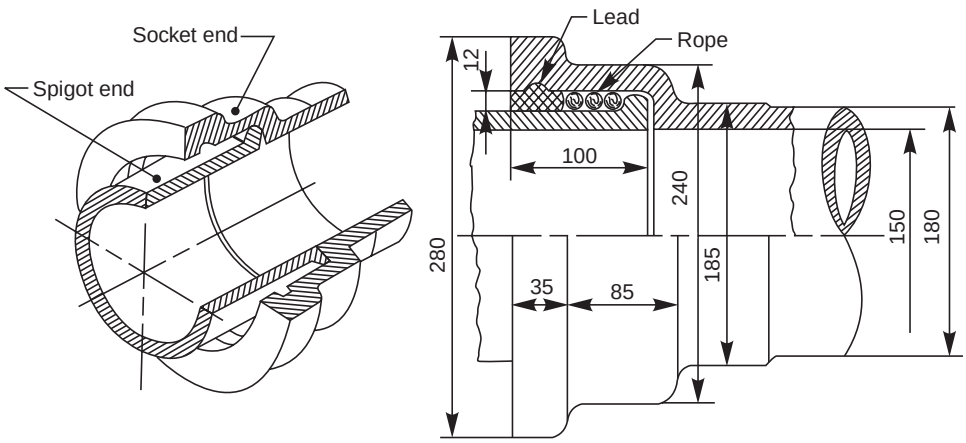

Fig. 8.6 Socket and spigot joint

8.3.2 Flanged Joint

This type of hydraulic joint is used extensively, where fluids under high pressures are to be conveyed. In this, oval shaped flanges are cast integral with the pipe ends. The flanges are joined with bolts and nuts.

For proper alignment of the pipes, a spigot or projection is formed in the centre of one flange and is made to fit in a corresponding socket or recess provided in the other flange. A gasket, made of rubber or canvas is compressed between the spigot and socket ends (Fig. 8.7).

8.4 SPECIAL PIPE JOINTS

In addition to the various types of joints discussed above, there are certain pipe joints which are used only in special cases. Two such joints, viz, union joint and expansion joint, are discussed below.

8.4.1 Union Joint

This is a special joint used on small pipes, which cannot be connected using a coupler (refer article 8.5.1 for particulars), when they are fixed in position or when they are too long to rotate.

In the union joint shown in Fig. 8.8, the nut A, with both external and internal threads, is screwed on to the end of one pipe. Another nut B, with a step on its external diameter, is screwed on to the end of the other pipe. The two nuts and pipes are drawn together by the coupler nut C. A packing ring inserted between ends of the two pipes, makes the joint air tight.

www.EngineeringBooksPdf.com

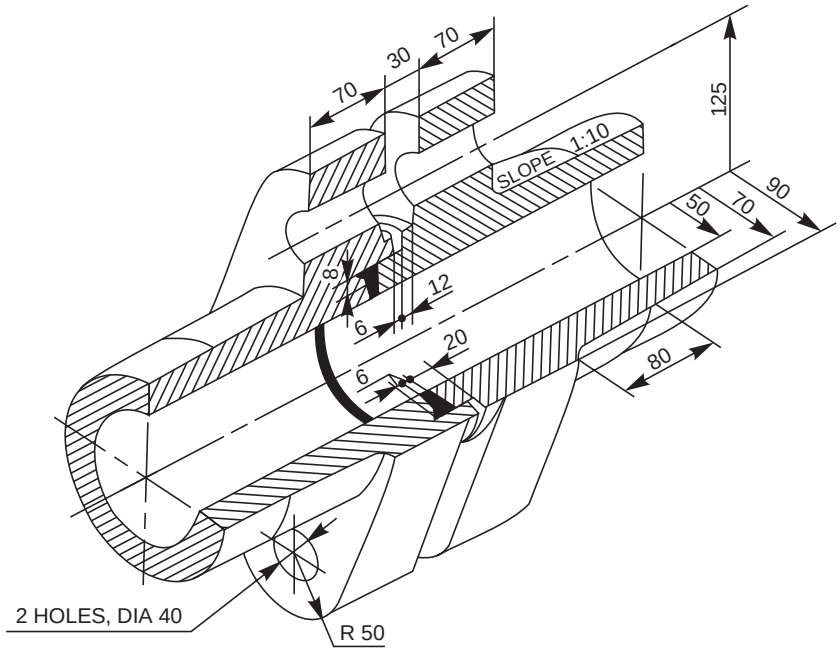

(a)

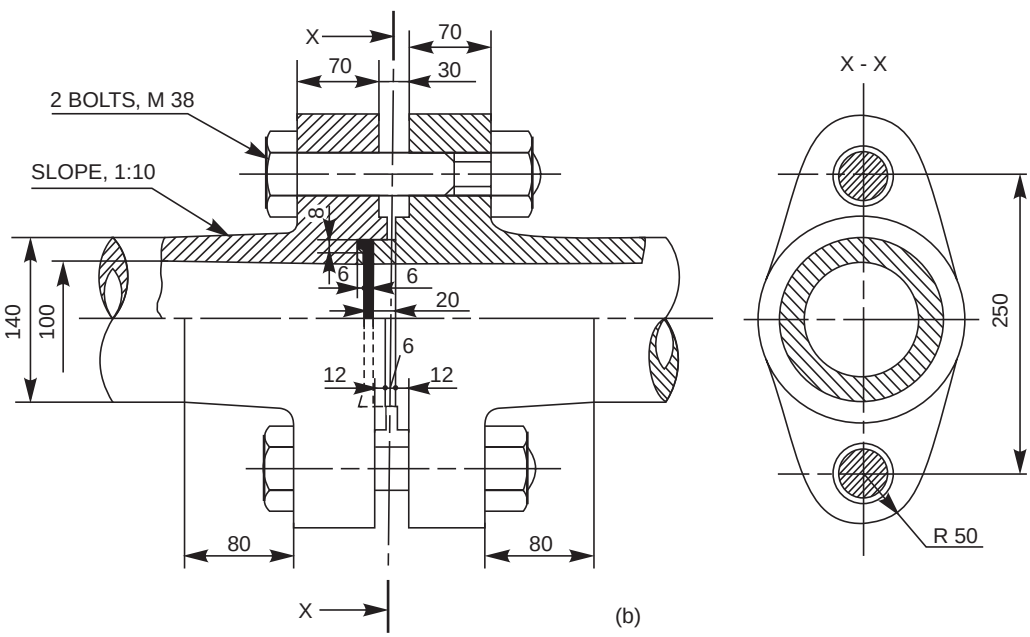

(b)

Fig. 8.7 Flanged joint

The special characteristic of this joint is, that it facilitates making and breaking of the joint without disturbing the pipe layout.

www.EngineeringBooksPdf.com

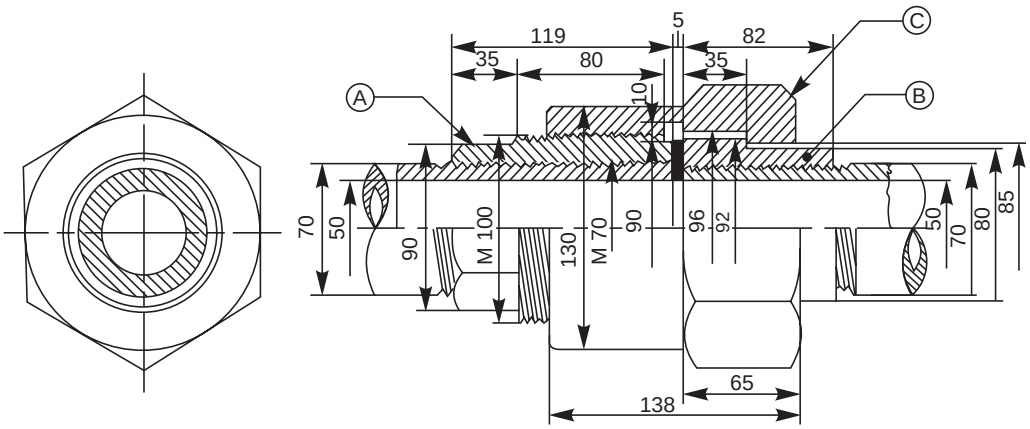

Fig. 8.8 Union joint

8.4.2 Expansion Joint

Long pipes, carrying steam and other hot fluids may undergo axial expansion and contraction due to variations of the fluid temperature. Expansion joints are used to accommodate such expansions or contractions.

Corrugated copper fitting (Fig. 8.9*a*) or a loop made of copper pipe (Fig. 8.9*b*) may be placed between two pipes at suitable intervals, to act as an expansion joint.

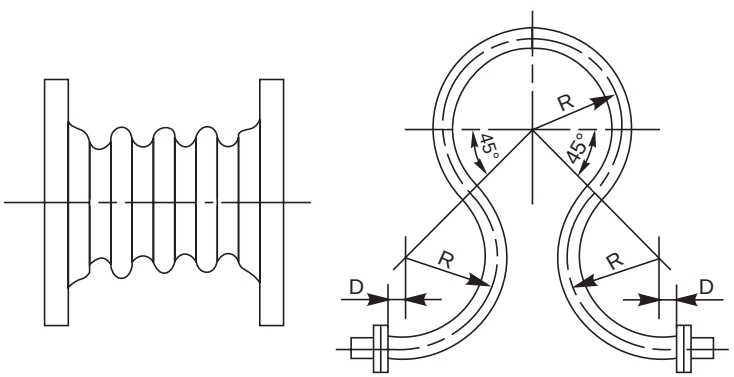

(a) (b)

Fig. 8.9 (*a*)–Corrugated fitting, (*b*)–Loop

For better results, an expansion joint, a gland with stuffing box is used. In this, the sleeve B can have free axial motion in the stuffing box A. The pipes to be joined are connected to the sleeve B and stuffing box A, at their ends, through flanged joints.

Leakage through the joint is prevented by the asbestos packing D, stuffed in the box and compressed by the gland C, as the nuts E are tightened. The flanges of the sleeve and the stuffing box are connected by bolts F. When the pipes experience expansion or contraction, either the sleeve or the stuffing box or both move axially. The nuts used with the bolts F, may be adjusted to permit the axial movement (Fig. 8.10).

When an expansion joint is used in a pipe line, it is advisable that the pipes are not rigidly clamped but are suspended on hangers or supported on rollers (Fig. 8.11).

www.EngineeringBooksPdf.com

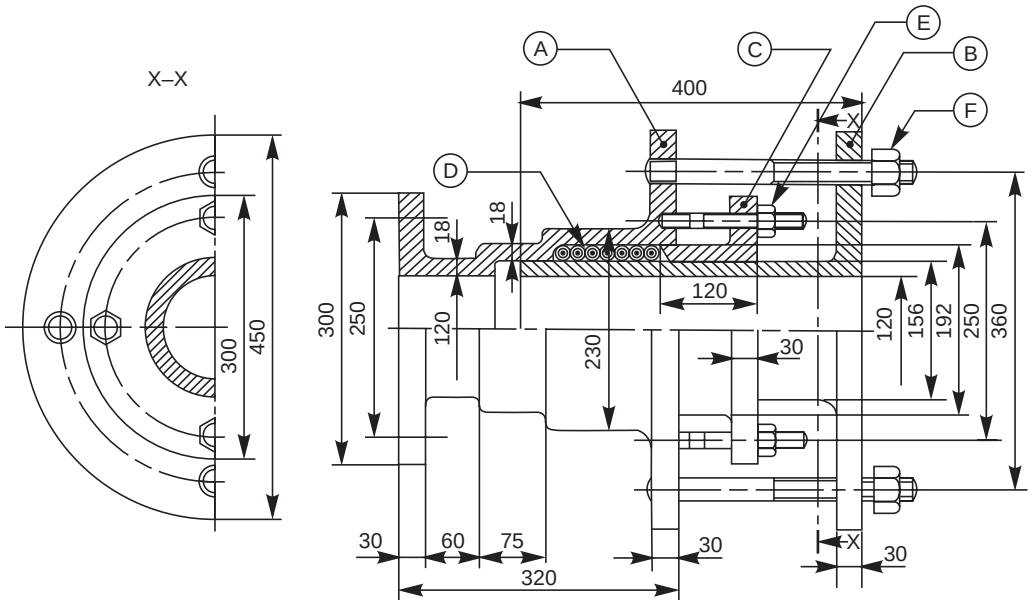

Fig. 8.10 Gland and stuffing box expansion joint

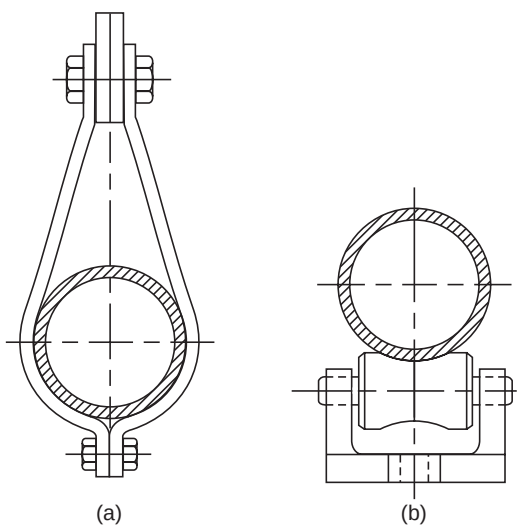

Fig. 8.11 Pipe supports (*a*)–Hanger, (*b*)–Roller

8.5 PIPE FITTINGS

Pipe fittings, such as bends, elbows, tees, crosses, etc., are used with wrought iron and steel pipes of relatively smaller sizes, so that they are either connected or branched-off at right angle. The following are some of the commonly used pipe fittings:

www.EngineeringBooksPdf.com

8.5.1 GI Pipe Fittings

8.5.1.1 Coupler

For making-up the length, in general, wrought iron and steel pipes are joined by means of a socket or coupler. It is a small pipe with internal threads throughout, used to connect the pipes having external threads at their ends (Fig. 8.12*a*).

8.5.1.2 Nipple

A nipple is a small pipe, threaded throughout on the outside. For making up the length, the nipple is screwed inside the internally threaded ends of the pipes (Fig. 8.12*b*) or pipe fittings. This type of joint, causes restriction to the fluid passage.

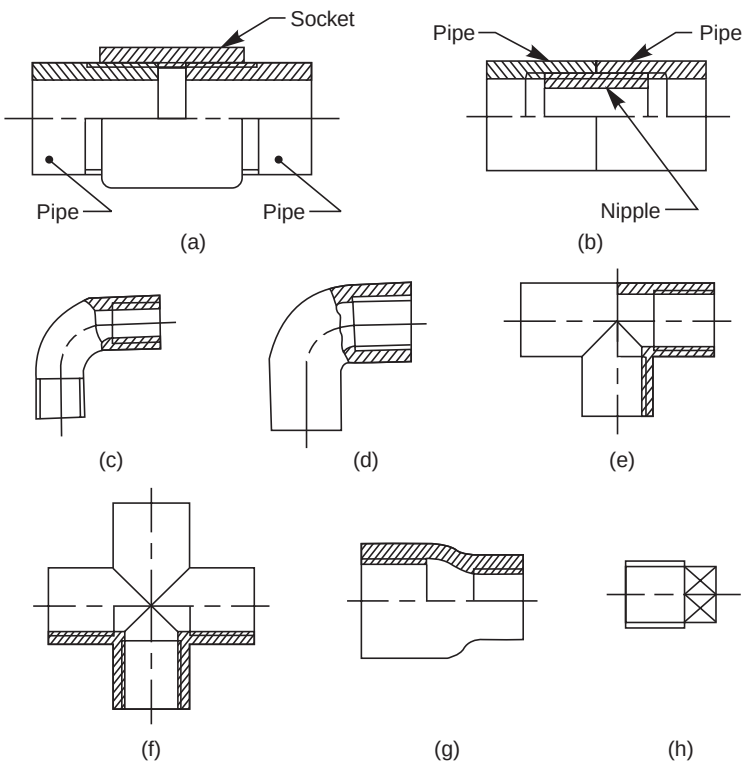

a – Socket joint b – Nipple joint c – Bend
d – Elbow e – Tee f – Cross
g – Reducing socket h – Plug

Fig. 8.12 GI pipe fettings

8.5.1.3. Bends, Elbows, Tees and Crosses

These fittings are used either to connect or branch-off the pipes at right angle (Figs. 8.12 *c* to *f*).

8.5.1.4. Reducing Socket

It is used to connect two pipes of different diameters (Fig. 8.12*g*).

8.5.1.5. Plug

It is used to close the end of a pipe with internal threads (Fig. 8.12*h*). For the same purpose, a plug with internal threads can also be used to close a pipe end with external threads.

www.EngineeringBooksPdf.com

8.5.2 CI Pipe Fittings

For small size cast iron and steel pipes upto 2.5 inches size and less, the fittings are threaded. Cast iron pipe fittings of greater diameter are provided with flanges (Fig. 8.13).

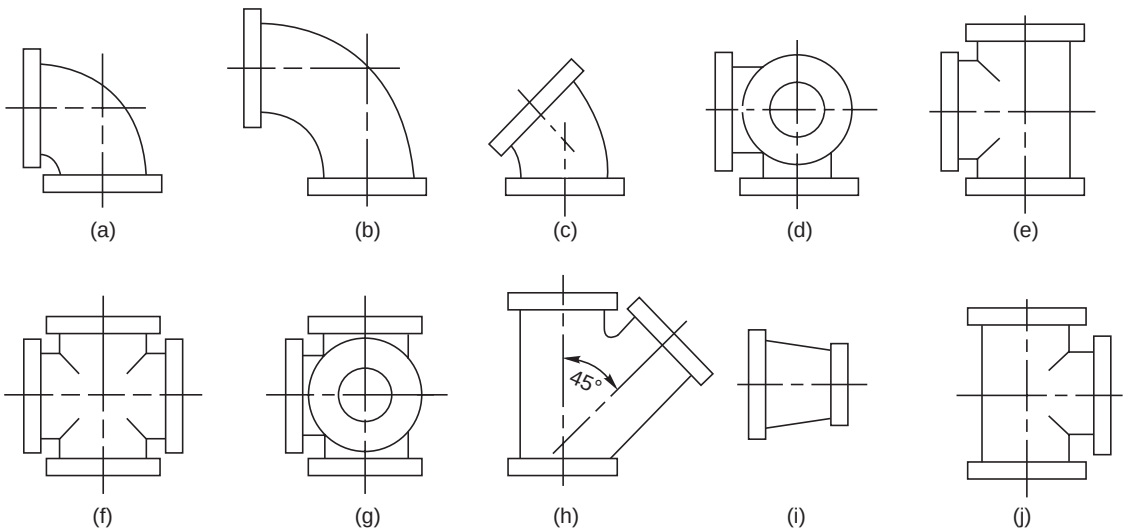

(*a*) 90° Elbow (*b*) 90° long radius elbow (*c*) 45° Elbow (*d*) Side outlet 90° Elbow

(*e*) Tee (*f*) Cross (*g*) Side outlet tee (*h*) 45° Lateral (*i*) Reducer (*j*) Tee reducer

Fig. 8.13 CI pipe fittings

8.5.3 PVC Pipes and Fittings

Plastic pipes and pipe fittings made of polyvinyle chloride (PVC) are extensively used for agricultural, industrial and domestic use. These pipes are made in sizes varying from 20 mm to 315 mm diameter as per IS 4985:81.

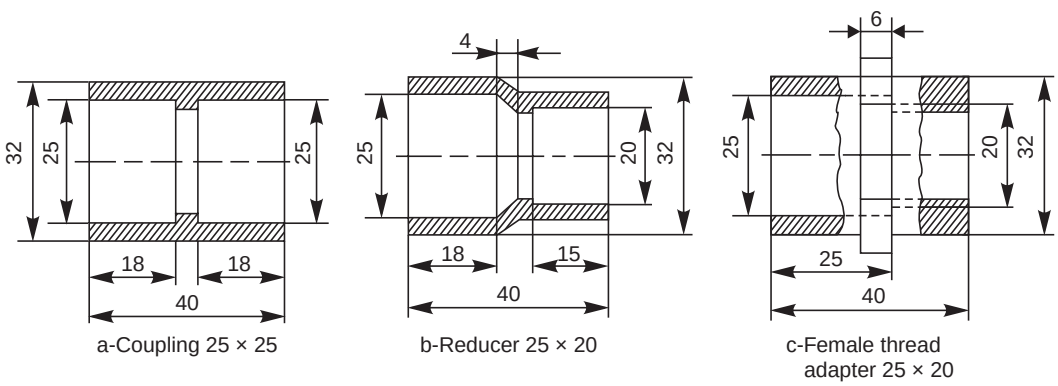

Fig. 8.14 PVC pipe fittings (contd.)

www.EngineeringBooksPdf.com

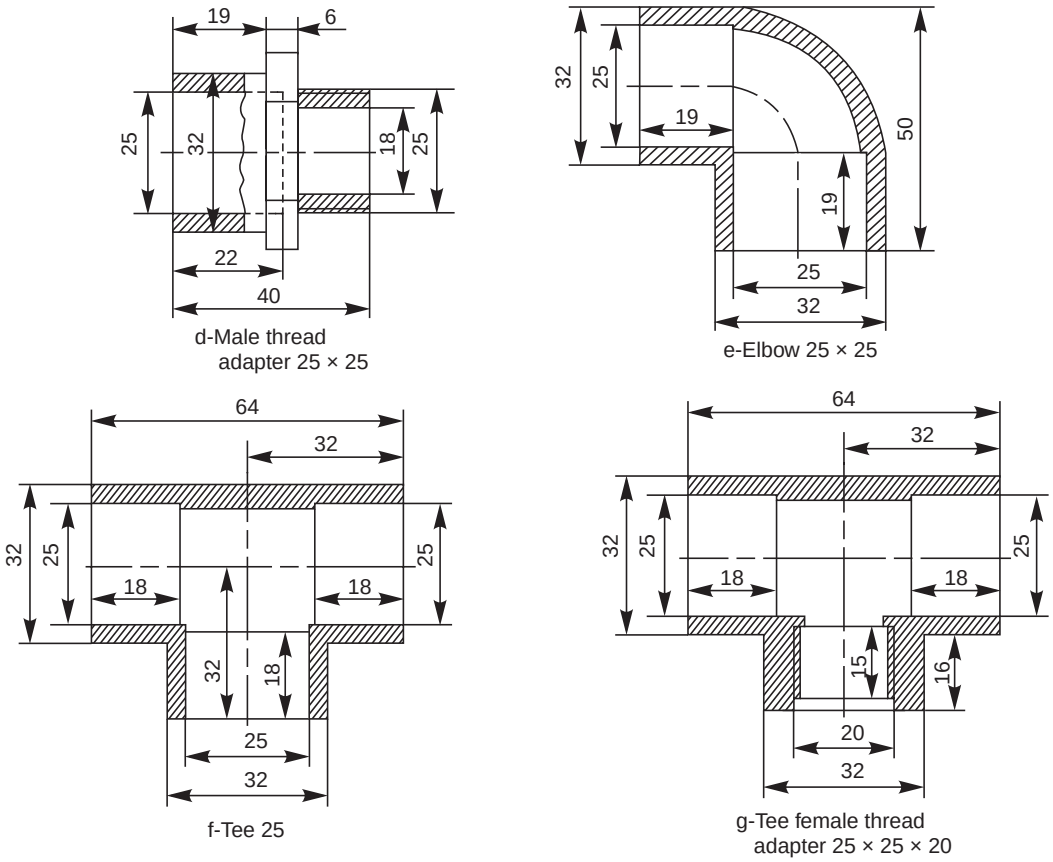

Fig. 8.14 PVC pipe fittings

8.5.3.1 Salient Features

PVC pipes exhibit the following salient features:

1. Smoother bore in comparison to CI, GI and also cement pipes, thereby better flow characteristics.
2. Seemless, strong and resilient.
3. Light weight, offering total economy in handling, transportation and installation.
4. Resistance to chemical, electrolytic and galvanic corrosion.
5. Odourless and hygienic for transporting potable water, as they do not subject to contamination.
6. Maintenance free.
7. Long-lasting-PVC is free from weakening by scale formation, rusting, weathering and chemical action and hence more durable for rated working conditions.

8.5.3.2 Properties

The following properties are expected from pipes made as per BIS specifications:

1. Thermal conductivity – 4×10^{-4} cal/hr – cm/°C/cm^2
2. Co-efficient of linear expansion – 5.0 to 6.0×10^{-5} mm/°C
3. Specific gravity – 1.41 gms/cm^3
4. Combined flexural and compressive strength – 600 kg/cm^2
5. Impact strength at 20°C–3 kg/cm^2

www.EngineeringBooksPdf.com

6. Electrical resistance – 10^{14} ohms cm
7. Modulus of elasticity – approximately 30,000 kg/cm^2
8. Vicat softening point – 81°C.

Dimensions of PVC pipes as per IS 4985-1981 are given in Table 8.1. It may be noted that the pipe size indicates the outside diameter of the pipe. However, the sizes of the fittings indicate the inside diameter. The dimensions of commonly used PVC pipe fittings are shown in Fig. 8.14, for 25 mm pipe.

The description of the fittings and their technical data are given in Table 8.2.

Table 8.1 Dimensions of PVC pipes — All dimensions in millimetres

Wall thickness for working pressures									
Outside diameter	*Tolerance on outside diameter*	*Class 1 2.5 kgf/cm^2*		*Class 2 4 kgf/cm^2*		*Class 3 6 kgf/cm^2*		*Class 4 10 kgf/cm^2*	
		Min.	*Max.*	*Min.*	*Max.*	*Min.*	*Max.*	*Min.*	*Max.*
20	+ 0.3	—	—	—	—	—	—	1.1	1.5
25	+ 0.3	—	—	—	—	—	—	1.4	1.8
32	+ 0.3	—	—	—	—	—	—	1.8	2.2
40	+ 0.3	—	—	—	—	1.4	1.8	2.2	2.7
50	+ 0.3	—	—	—	—	1.7	2.1	2.8	3.3
63	+ 0.3	—	—	1.5	1.9	2.2	2.7	3.5	4.1
75	+ 0.3	—	—	1.8	2.2	2.6	3.1	4.2	4.9
90	+ 0.3	1.3	1.7	2.1	2.6	3.1	3.7	5.0	5.7
110	+ 0.4	1.6	2.0	2.5	3.0	3.7	4.3	6.1	7.0
140	+ 0.5	2.0	2.4	3.1	3.8	4.8	5.5	7.7	8.7
160	+ 0.5	2.3	2.8	3.7	4.3	5.4	6.2	8.8	9.9
180	+ 0.6	2.6	3.1	4.2	4.9	6.1	7.0	9.9	11.1
200	+ 0.6	2.9	3.4	4.6	5.3	6.8	7.7	11.0	12.3
225	+ 0.7	3.3	3.9	5.2	6.0	7.6	8.6	12.4	13.9
250	+ 0.8	3.6	4.2	5.7	6.5	8.5	9.6	13.8	15.4
280	+ 0.9	4.1	4.8	6.4	7.3	9.5	10.7	15.4	17.2
315	+ 1.0	4.6	5.3	7.2	8.2	10.7	12.0	17.3	19.3

Table 8.2 PVC pipe fittings—technical data (*contd.*)

Description	*size in mm I.D*	*Inch equivalent*	*Applications*
1. Coupler	20	0.50	These are used for joining two PVC pipes.
	25	0.75	
	32	1.00	
	40	1.25	
	50	1.50	
	63	2.00	
2. 90° Elbow	20 to 110	0.5 to 4.0	These are used for short turns of 90°.
3. 90° Bend	20 to 315	0.5 to 12.00	These are used where long turns of angle are required. They do not cause any losses due to friction.

www.EngineeringBooksPdf.com

Table 8.2 PVC pipe fittings—technical data

Description	*size in mm I.D*	*Inch equivalent*	*Applications*
4. Equal tee	20 to 160	0.5 to 6.0	These are used for bypass and taking big service line out of main line.
5. Reducer tee	20 to 160	0.5 to 6.0	These are used for reduced tapping from main line
6. Male threaded adapter (MTA)	20 to 140	0.5 to 5.00	These are used to connect the GI pipe line/metal line and all types of valves, taps, etc., through a male portion of PVC threaded adaptors.
7. Female threaded adapter (FTA)	20 to 90	0.5 to 3.0	These are used to connect a PVC pipe line directly to a metal pipe.
8. Reducing FTA	25 × 20 to 90 × 75	0.75 × 0.5 to 3.0 × 2.50	These are used to connect a PVC pipeline directly to a metal pipe of lower diameter or vice-versa.
9. Reducer	25 × 20 to 160 × 140	0.75 × 0.5 to 6.0 × 5.0	These are used to convert the service line, into a small line.

8.5.3.3. Applications

The following are the typical applications of PVC pipes:

1. Agricultural and lift irrigation
2. Rural and urban drinking water supply
3. Industrial/chemical effluent disposal
4. Acids and slurries transportation
5. Telecommunication cable ducting
6. Bio-gas (Gober-gas)/Natural gas, and oil distribution lines
7. Tube well casings
8. Under-ground or open pipe line/drainage
9. Domestic plumbing and drainage
10. Sewage and drainage
11. Air conditioning/industrial ducting
12. Main line in sprinkler/drip irrigation

8.5.3.4 Joining

Threaded PVC pipe fittings should not be over-tightened, as the threads may get damaged. PVC pipes should never be threaded, and they are joined by a solvent cement or by suitable threaded fittings. The steps followed for joining the PVC pipes are:

1. The pipes are cut as square as possible. The pipe and socket should be clean and dry. The surface is cleaned with emery paper before joining.
2. Thick coat of solvent cement is applied on the outer surface of the pipe and also on the inner surface of the socket.
3. The pipe is inserted into the socket and turned through 90° for even distribution of cement.

www.EngineeringBooksPdf.com

4. The joint is held firmly without slipping for 2 minutes and allowed to dry.
5. After 24 hours, the pipe lines are ready for use.

8.6 PIPE LAYOUT

Pipe layout is a kind of drawing, that shows how the various pipes are fitted together, to make-up a piping system. It shows the location, size and orientation of the pipe fittings and valves. As the components of a system are standard ones, it is sufficient to show simplified representation of the components.

Figure 8.15 shows the layouts of cast iron and GI pipe line, incorporating most of the pipe fittings.

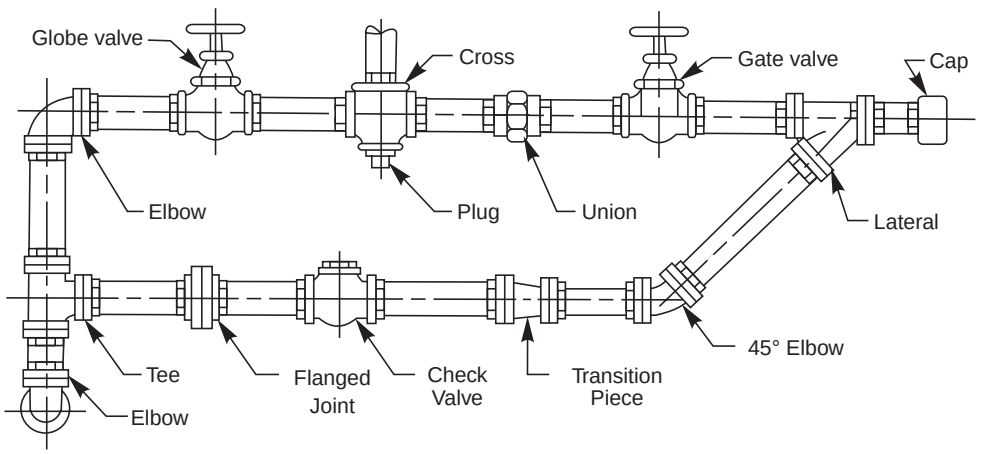

(*a*) CI pipe layout

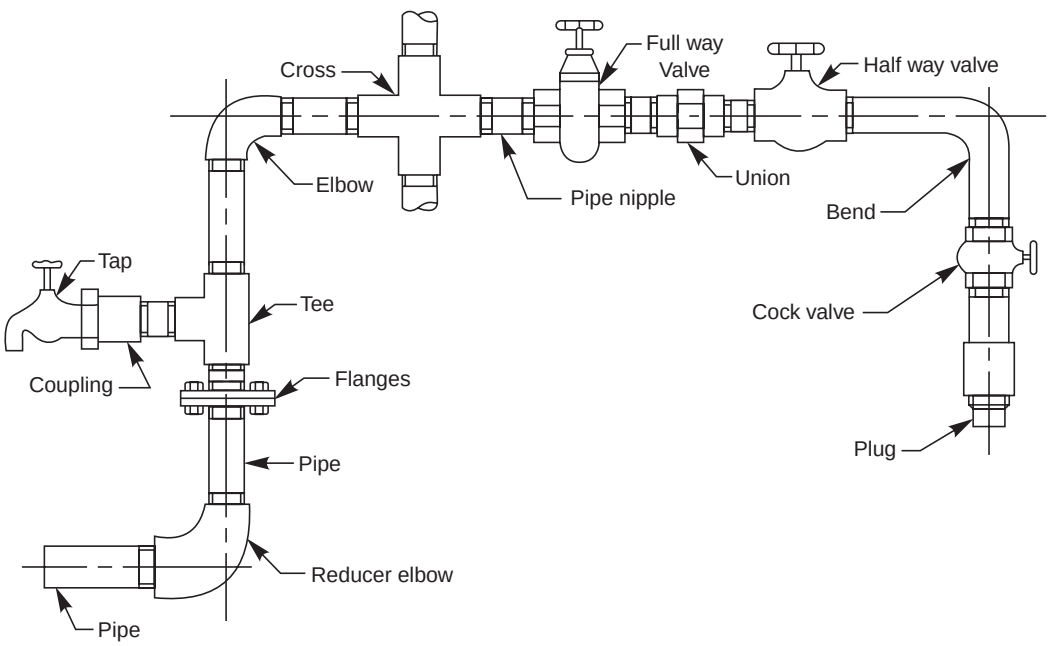

(*b*) GI pipe layout

Fig. 8.15 Pipe layout

www.EngineeringBooksPdf.com

THEORY QUESTIONS

8.1 What is the criteria for selecting the pipe material?

8.2 How are pipe joints classified?

8.3 What are the methods of strengthening a cast iron steam pipe joint so as to withstand higher pressures?

8.4 Differentiate between the joints for CI pipes and joints for copper pipes.

8.5 What is the purpose of providing a packing of compressible material, between the flanges in a flanged pipe joint?

8.6 Explain how the flanges are provided at the ends of the steam pipes, used for joining wrought iron and steel pipes.

8.7 Name the different types of joints used for hydraulic pipes.

8.8 Where and why a socket and spigot pipe joint is used?

8.9 What is the special feature of a union joint?

8.10 What is the purpose of providing an expansion joint in the pipe line, carrying hot fluids?

8.11 Explain the working of an expansion joint.

8.12 Describe any three types of pipe fitting, used in the pipe layout, made of (*a*) Gl, (*b*) CI and (*c*) PVC pipes.

DRAWING EXERCISES

8.1 Sketch the conventional representation of pipe threads.

8.2 Draw (*a*) sectional view from the front and (*b*) view from the side of different forms of flanged joints used for cast iron steam pipes of diameter 100 mm.

8.3 Sketch any one method of strengthening cast iron steam pipe joints so that it will withstand higher pressures.

8.4 Indicating proportions, sketch any one method of joining (*a*) copper steam pipes and (*b*) wrought iron or steel pipes of diameter 100 mm.

8.5 Sketch a suitable pipe joint to connect two pipes, each of diameter 250 mm. The pipes are to be laid underground. Indicate proportionate dimensions of various parts of the joint.

8.6 Draw (*a*) sectional view from the front and (*b*) view from the side of a hydraulic pipe joint of flanged type, to connect two pipes, each of diameter 50 mm.

8.7 Sketch a union joint and mark the proportions on it, by choosing suitable value for the pipe size.

8.8 Draw (*a*) sectional view from the front and (*b*) view from the side of a gland and stuffing box type of expansion joint, to connect two pipes, each of diameter 100 mm.

8.9 Sketch any three types of (*a*) GI, (*b*) CI and (*c*) PVC pipe fittings, indicating proportions.

8.10 Sketch (*a*) CI and (*b*) GI pipe layouts, incorporating most of the fittings.

www.EngineeringBooksPdf.com

PULLEYS

9

9.1 INTRODUCTION

Power transmission between shafts is achieved either through gear or belt drives. In the latter case, pulleys are mounted on shafts, over which a belt runs, transmitting the power. Generally, pulleys are made of cast iron or wrought iron; but at times, from steel plates also, by welded construction. Depending upon the application, a pulley may be of a single piece or split type. The latter one is used, where a pulley has to be mounted at an intermediate location on a shaft. Pulleys are mounted on shafts, by using sunk keys.

9.2 BELT DRIVEN PULLEYS

Flat and V-belts are used for power transmission between shafts. A flat belt operates on a pulley with a smooth surface; whereas pulleys with wedge shaped groove(s) is (are) used with V-belt(s).

9.2.1 Flat Belt Pulleys

These pulleys are of different sizes and shapes, the designs of which are based on the functional requirements. A flat belt drive uses a flat belt of rectangular cross-section; the width of which is appreciably larger than the thickness. The belt operates on the surface of a pulley. The following are the main types of pulleys used with flat belts:

9.2.1.1. Armed Pulley

The main parts of a pulley are the hub or boss, rim and arms or spokes. Figure 9.1 shows an armed pulley with the proportions marked. It may be noted that the arms of a pulley are either straight or curved; the cross section being elliptical in shape.

Rims of cast iron pulleys are often provided with slight convexity, known as crowning. This prevents the axial slipping of the belt during operation.

9.2.1.2. Pulley with a Web

When the diameter of a pulley is relatively small, the hub and rim of the pulley are connected with a web, which is in the form of a disc. Figure 9.2 shows a pulley with a web. To make the pulley light in weight, holes may be provided in the web.

9.2.1.3. Cone Pulleys

Step cone pulleys are mounted on both the driver and driven shafts in opposite directions to provide different speed ratios between them for a constant speed of the driver shaft. The diameters of the steps in the two pulleys are such that the same belt can operate on any pair of steps. These pulleys are used in machine tools, such as lathe, drilling machine, etc. Figure 9.3 shows a step cone pulley with four steps.

www.EngineeringBooksPdf.com

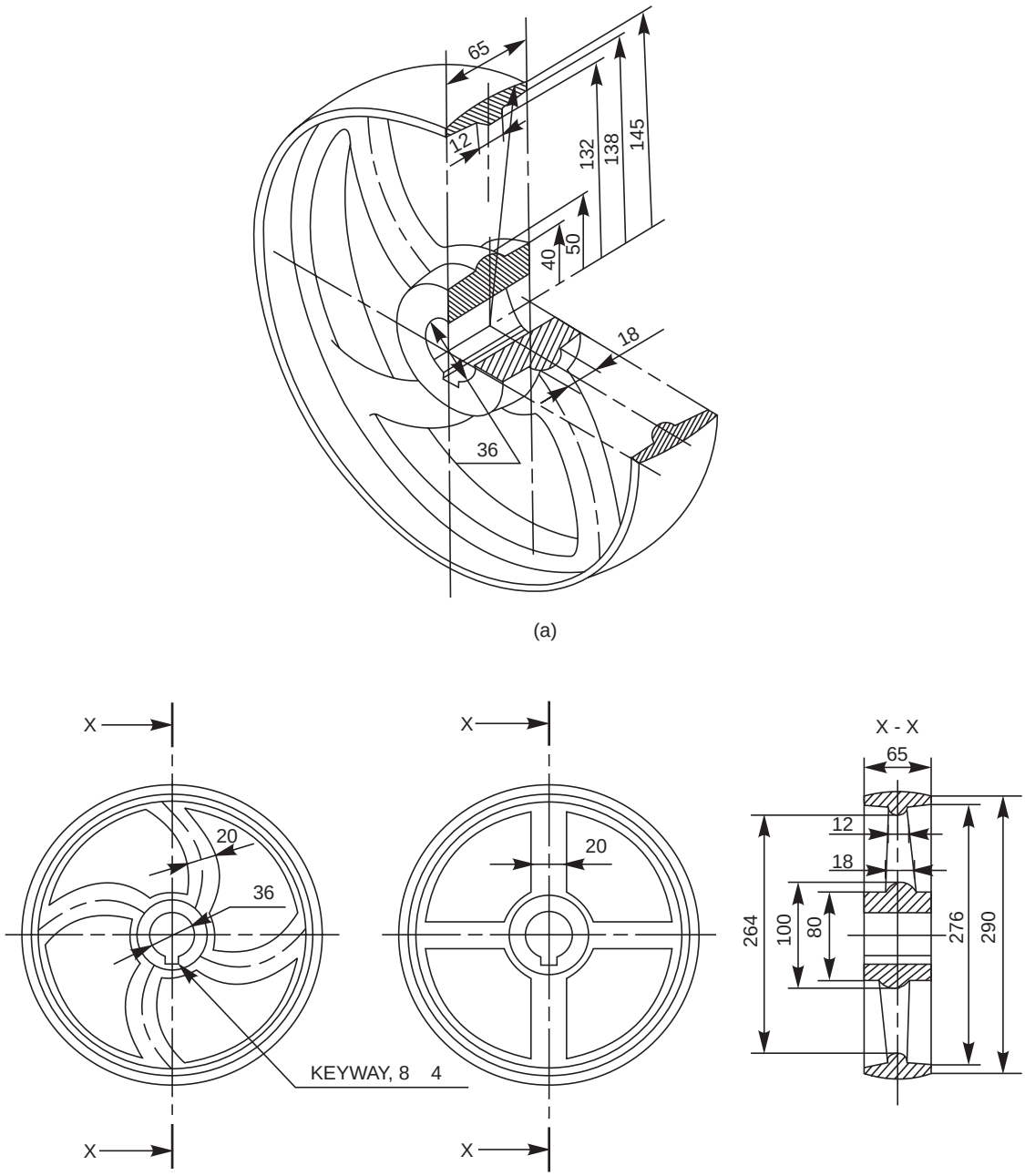

Fig. 9.1 Pulley with arms

Flat belts are used when the centre distance between the two shafts is more. However, V-belts are preferred when the shafts are located closer. The V-belt drive is relatively slip free. It is used for transmission ratios upto and above 15:1 without tension pulleys. The contact area between the belt and pulley can be increased and thus the power transmission can also be enhanced.

www.EngineeringBooksPdf.com

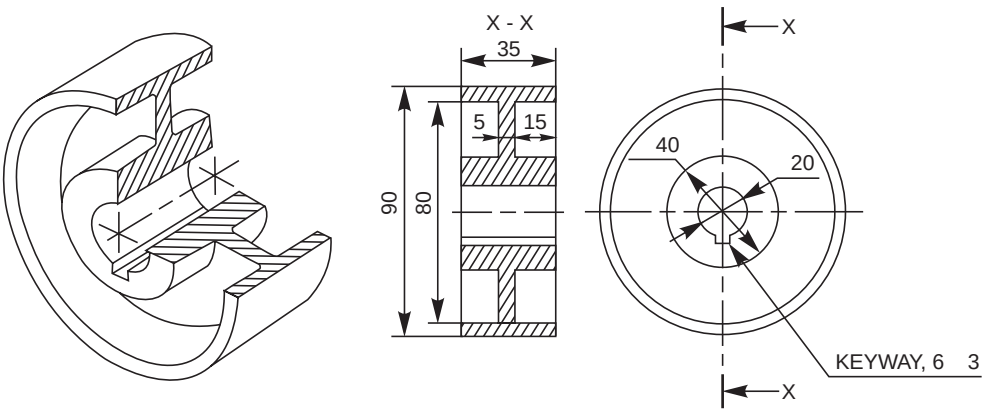

Fig. 9.2 Pulley with web

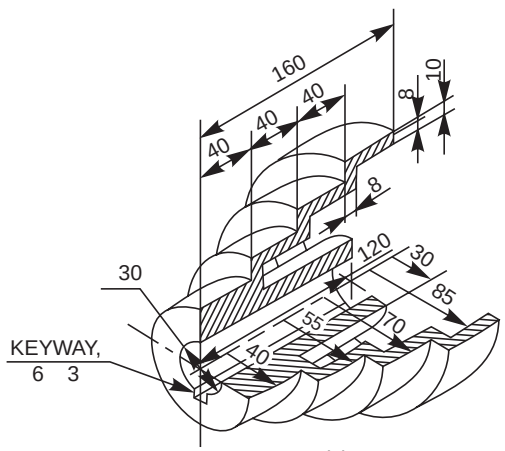

(a)

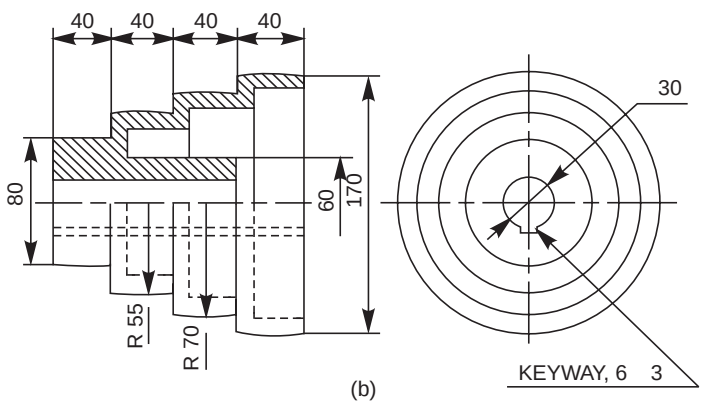

(b)

Fig. 9.3 Step cone pulley for flat belt drive

www.EngineeringBooksPdf.com

9.2.1.4. Fast and Loose Pulleys

When a number of machines are operated from a single power source, each machine is provided with a fast and loose pulley arrangement. With this arrangement, any machine may be started or stopped at will, while the lay shaft is running continuously.

Figure 9.4 shows the arrangement of a fast and loose pulley. In this, the fast pulley is mounted on the shaft with a keyed joint, whereas the loose pulley runs freely on the shaft. The diameter of the loose pulley is slightly less than that of the fast pulley so that when the belt is shifted on to the loose pulley, its tension is reduced. Power is transmitted only when the belt is on the fast pulley. Loose pulley takes care of the idling time of the machine and does not transmit any power.

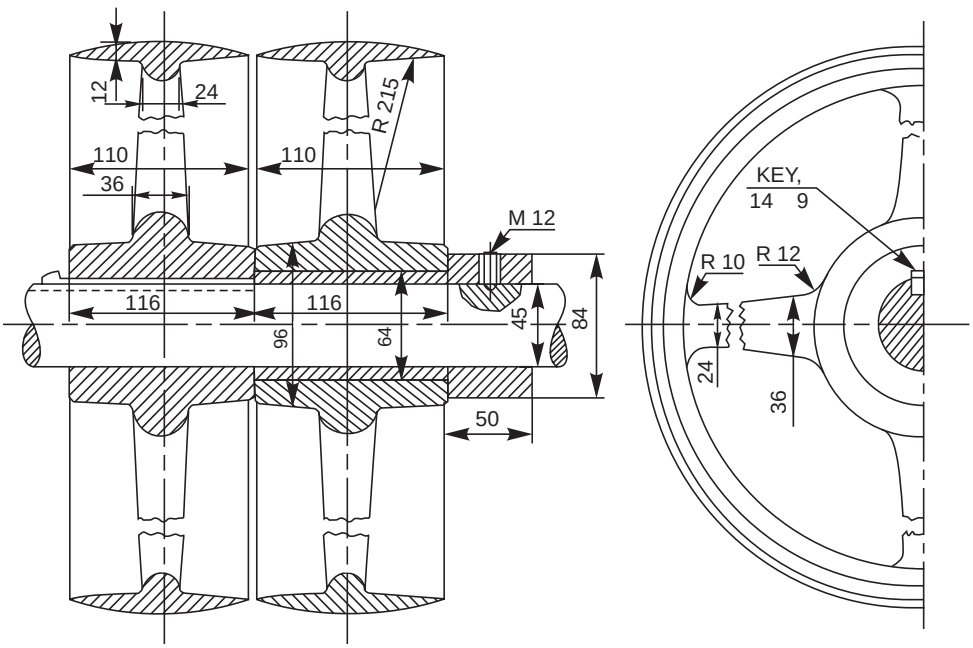

Fig. 9.4 Fast and loose pulleys

9.2.2. V-belt Pulleys

When a V-belt is used for power transmission, the pulley rim is modifide by providing wedge shaped groove(s) so that the V-belt(s) can run in the groove(s).

Figure 9.5 (*a*) shows a V-belt pulley that operates with a single V-belt and Fig. 9.5 (*b*), pulley with three V-belts. In multiple V-belt drive; even if one belt fails, the ramaining belts continue the drive until it is convenient to shut down the machine for repairs. This drive, on account of wedging effect of the belt in the groove, causes less pull on the shaft than flat belt of the same general characteristics.

www.EngineeringBooksPdf.com

9.2.2.1. Step Cone Pulley (for V-belt)

The principle and the purpose for which a step cone pulley for V-belt drive is used are the same as those associated with the step cone pulley for flat belt. Figure 9.6 shows a cone pulley for V-belt with four steps.

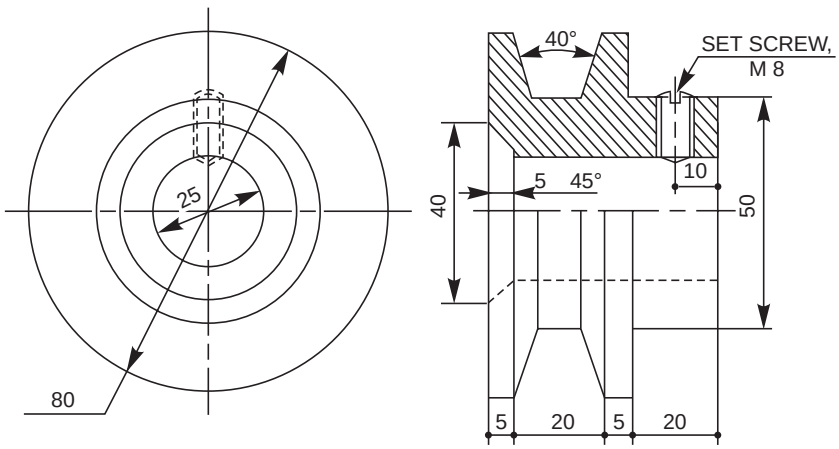

(a)

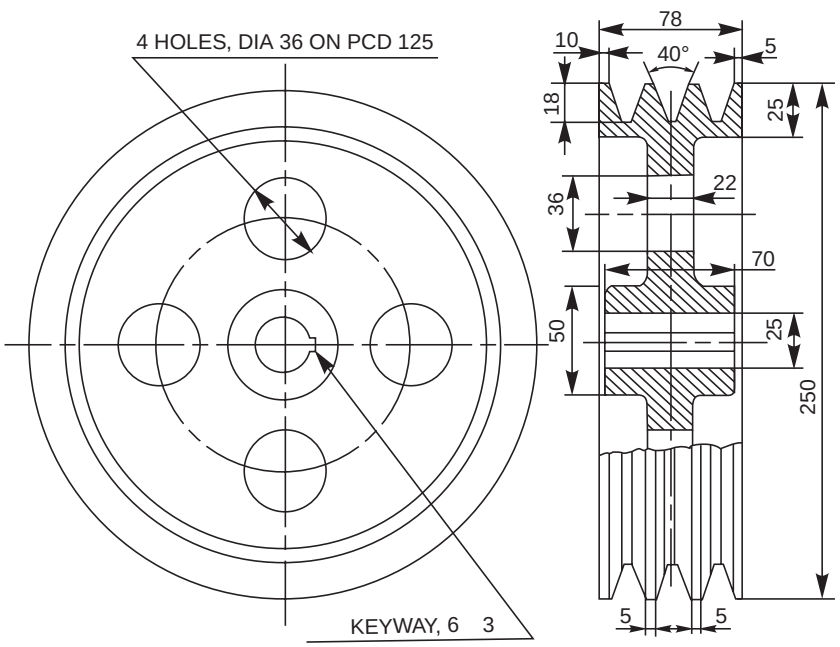

(b)

Fig. 9.5 V-belt pulleys

www.EngineeringBooksPdf.com

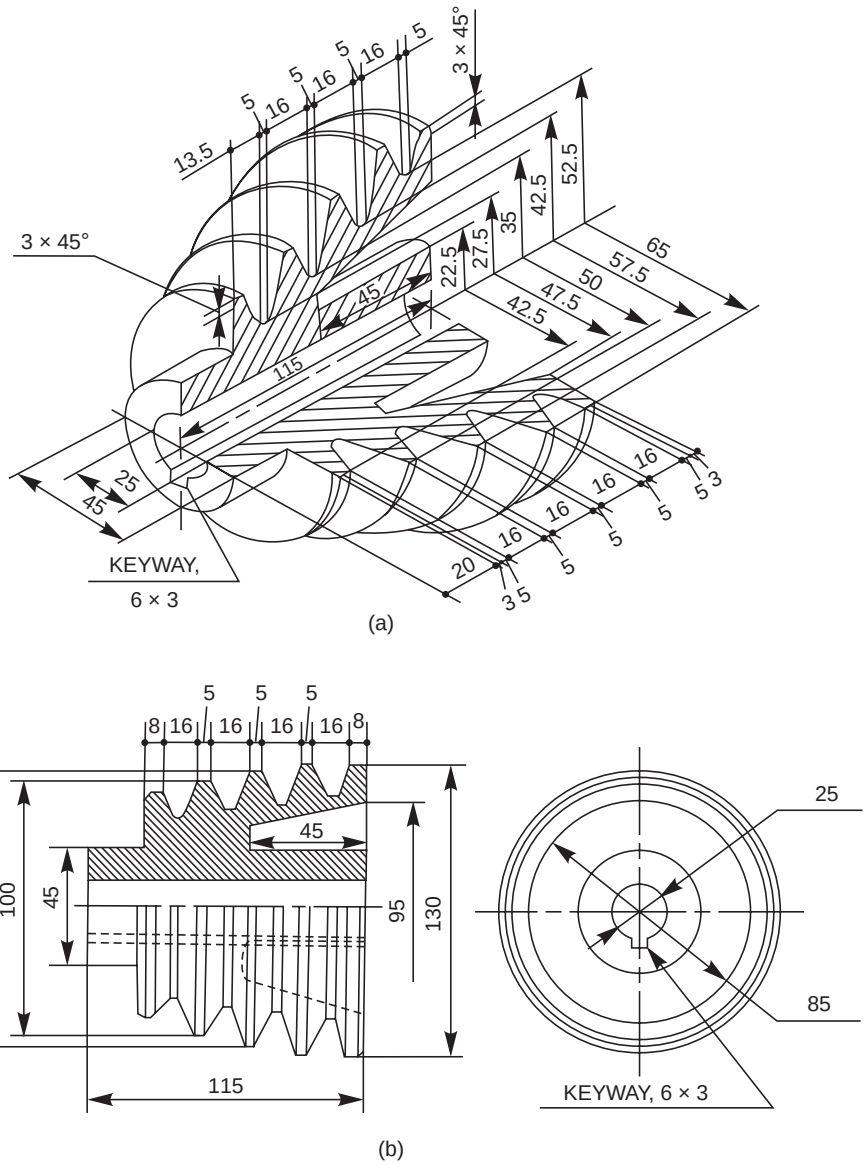

Fig. 9.6 Step cone pulley for V-belt drive

9.2.3 Rope Pulley

A rope drive is used for transmission of power over large distances. Ropes of cotton, manilla or hemp, fitting into circumferential grooves on the pulleys are used for power transmission. The drive may use either a single or multiple ropes.

A rope pulley is similar to V-belt pulley in construction, except for slight changes in the grooves as shown Fig. 9.7. This drive is preferred for transmission of power between shafts located at different elevations and at varying distances. Steel ropes are used for higher power transmission and in cases such as winch drives, rope ways, overhead cranes, etc.

www.EngineeringBooksPdf.com

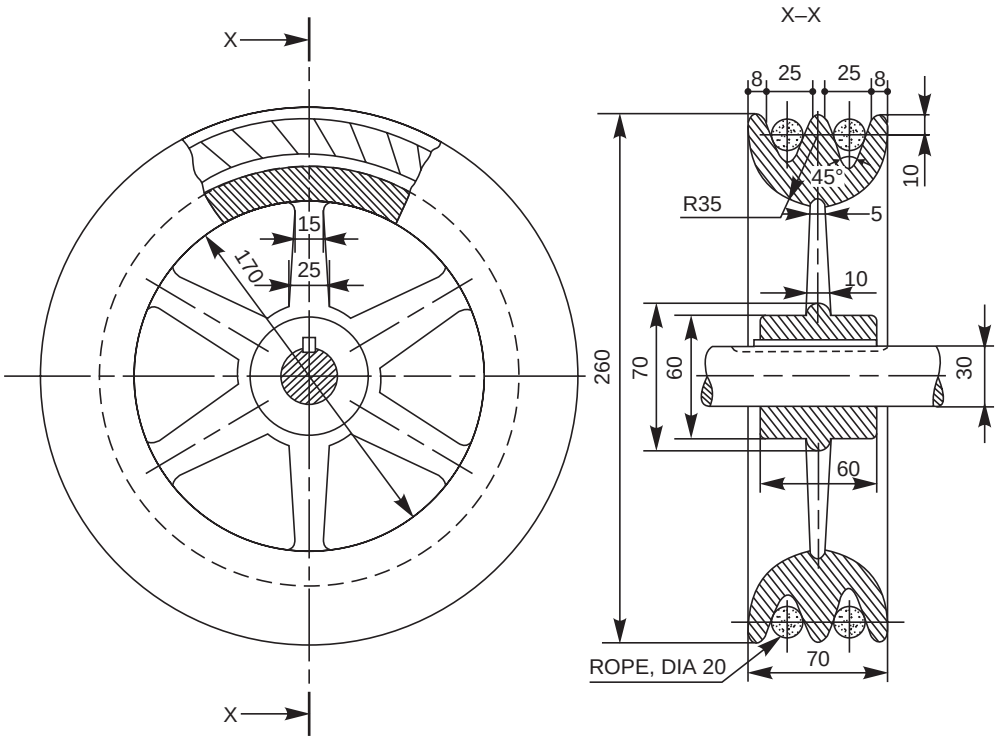

Fig. 9.7 Rope pulley

THEORY QUESTIONS

9.1 What is the use of a pulley?
9.2 How are pulleys mounted on shafts?
9.3 Name different types of pulleys?
9.4 What is "crowning" and where and why it is applied?
9.5 When is a flat belt pulley recommended?
9.6 What are the various types of flat belt pulleys?
9.7 What is the difference between an armed pulley and a pulley with a web?
9.8 What is meant by fast and loose pulleys? Explain its working principle.
9.9 What is the difference between a flat belt and a V-belt?
9.10 What are the various types of V-belt pulleys?
9.11 Where and why a step cone pulley is used?
9.12 Where do you recommend a rope drive?
9.13 Differentiate between a V-belt drive and a rope drive.
9.14 What are the materials used for the ropes?

DRAWING EXERCISES

9.1 Sketch the following types of flat belt pulleys, providing necessary views; with proportionate dimensions marked:

www.EngineeringBooksPdf.com

(*a*) armed pulley,

(*b*) pulley with a web.,

The pulleys are to be mounted on a shaft of diameter 50mm.

9.2 Sketch the necessary view of a step cone pulley with four steps, operating with (*a*) flat belts and (*b*) V-belts.

Assume that the pulleys are to be mounted on shafts of diameter 50 mm.

9.3 Sketch (*a*) sectional view from the front and (*b*) view from the side of a fast and loose pulleys. Assume that the unit is to be mounted on a shaft of diameter 50 mm.

9.4 Giving proportionate dimensions; sketch the necessary views of a V-belt pulley that operates with three V-belts.

9.5 Sketch (*a*) sectional view from the front and (*b*) view from the side of a rope pulley. The pulley is to be mounted on a shaft of diameter 50 mm.

www.EngineeringBooksPdf.com

RIVETED JOINTS

10

10.1 INTRODUCTION

Riveted joints are permanent fastenings and riveting is one of the commonly used method of producing rigid and permanent joints. Manufacture of boilers, storage tanks, etc., involve joining of steel sheets, by means of riveted joints. These joints are also used to fasten rolled steel sections in structural works, such as bridge and roof trusses.

10.2 RIVETS AND RIVETING

10.2.1 Rivet

A rivet is a round rod of circular cross-section. It consists of two parts, viz., head and shank (Fig. 10.1 (*a*)). Mild steel, wrought iron, copper and aluminium alloys are some of the metals commonly used for rivets. The choice of a particular metal will depend upon the place of application.

10.2.2 Riveting

Riveting is the process of forming a riveted joint. For this, a rivet is first placed in the hole drilled through the two parts to be joined. Then the shank end is made into a rivet head by applying pressure, when it is either in cold or hot condition.

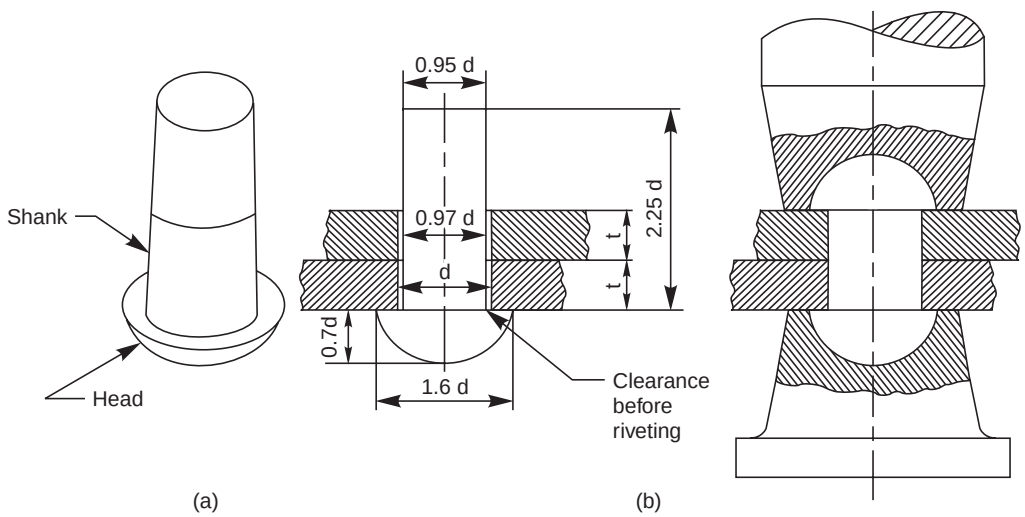

Fig. 10.1 (*a*) Rivet (*b*) Riveting

www.EngineeringBooksPdf.com

Pressure may be applied to form the second rivet head, either by direct hammering or through hydraulic or pneumatic means. While forming the rivet head, the shank will bulge uniformly. Hence, a certain amount of clearance between the hole and shank must be provided before riveting (Fig. 10.1 (*b*)).

Hot riveting produces better results when compared to cold riveting. This is because, after hot riveting, the contraction in the shank length tends to pull the parts together, making a tight joint.

10.2.3 Caulking and Fullering

Riveted joints must be made air tight in applications such as boilers and other pressure vessels. Caulking or fullering is done to make the riveted joints air tight.

10.2.3.1 Caulking

The outer edges of the plates used in boiler and other pressure vessels are bevelled. To produce air tight riveted joints, these bevelled edges of the plates are caulked. Caulking is an operation in which the outer bevelled edges of the plates are hammered and driven-in by a caulking tool. The caulking tool is in the form of a blunt edged chisel (Fig. 10.2*a*).

10.2.3.2 Fullering

Similar to caulking, fullering is also used to produce air tight joints. Unlike the caulking tool, the width of the fullering tool is equal to the width of the bevelled edges of the plates (Fig. 10.2 (*b*)).

Caulking and fullering operations are carried out effectively by applying pneumatic pressure.

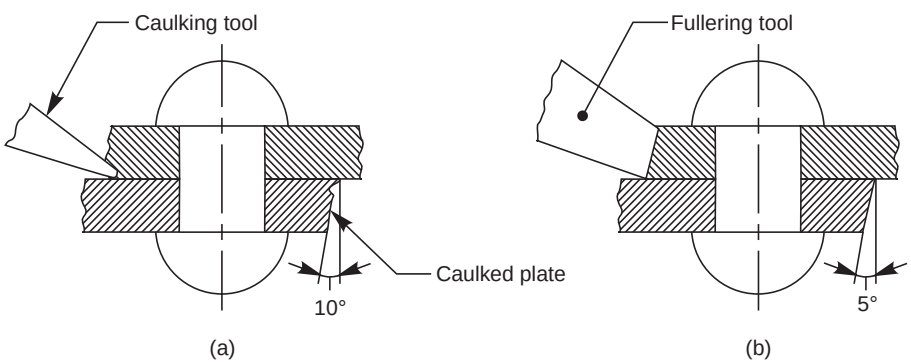

Fig. 10.2 (*a*) Caulking (*b*) Fullering

10.3 RIVET HEADS

Various forms of rivet heads, used in general engineering works and boiler construction and as recommended by Bureau of Indian Standards, are shown in Fig. 10.3. The standard proportions are also indicated in the figure.

10.4 DEFINITIONS

The definitions of the terms, associated with riveted joints are given below:

10.4.1 Pitch

It is the distance between the centres of the adjacent rivets in the same row. It is denoted by 'p' and usually taken as $3d$, where d is the rivet diameter.

www.EngineeringBooksPdf.com

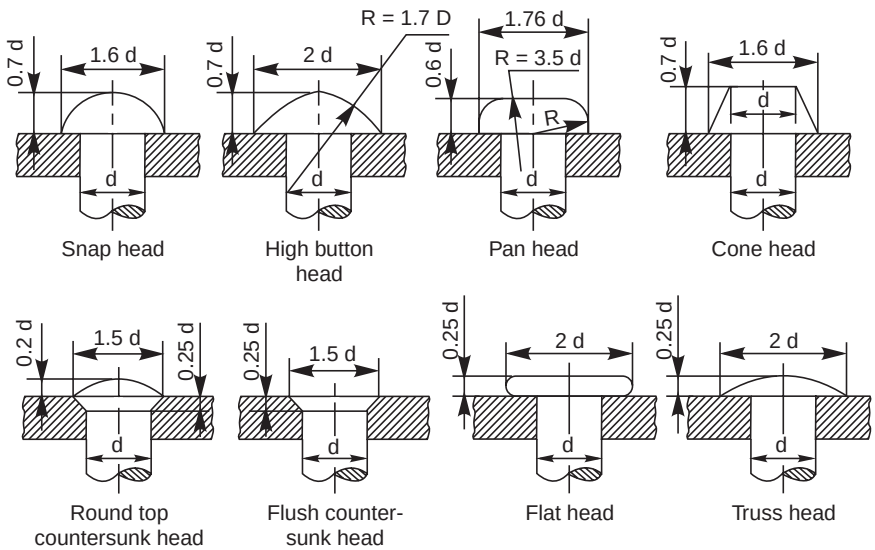

Fig. 10.3 Types of rivet heads

10.4.2 Margin

It is the distance from the edge of the plate to the centre of the nearest rivet. It is usually taken as 1.5*d*, where *d* is the rivet diameter. It is denoted by '*m*'.

10.4.3 Chain Riveting

If the rivets are used along a number of rows such that the rivets in the adjacent rows are placed directly opposite to each other, it is known as chain riveting (Fig. 10.10).

10.4.4 Zig-Zag Riveting

In a multi-row riveting, if the rivets in the adjacent rows are staggered and are placed in-between those of the previous row, it is known as zig-zag riveting (Fig. 10.11).

10.4.5 Row Pitch

It is the distance between two adjacent rows of rivets. It is denoted by 'p_r' and is given by,

$p_r = 0.8p$, for chain riveting $\quad p_r = 0.6p$, for zig-zag riveting.

10.4.6 Diagonal Pitch

This term is usually associated with zig-zag riveting and is denoted by 'p_d'. It is the distance between the centre of a rivet in a row to the next rivet in the adjacent row.

10.5 CLASSIFICATION OF RIVETED JOINTS

Riveted joints may be broadly classified into : structural joints and pressure vessel joints.

10.5.1 Structural Joints

Structural steel frames are made by using rolled steel plates and sections of standard shapes, as shown in Fig. 10.4.

Figure 10.5 shows an angle joint used to connect two plates at right angle. Here, an (equal) angle is used to connect the plates, by a single row of rivets. Figure 10.5 also shows the position of the rivets and other proportions of the joint.

Figure 10.6 shows rolled steel sections, *i.e.*, a column and a beam connected to each other through riveted joints. Figure 10.7 illustrates one design of a built-up girder, also made of rolled steel sections. In both the figures, proportions of the joints are also indicated.

www.EngineeringBooksPdf.com

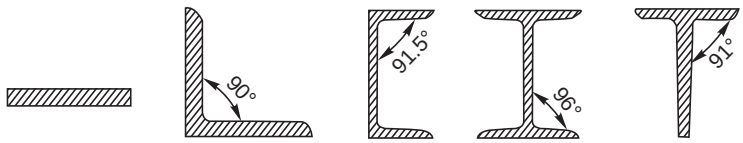

Fig. 10.4 Structural rolled steel sections

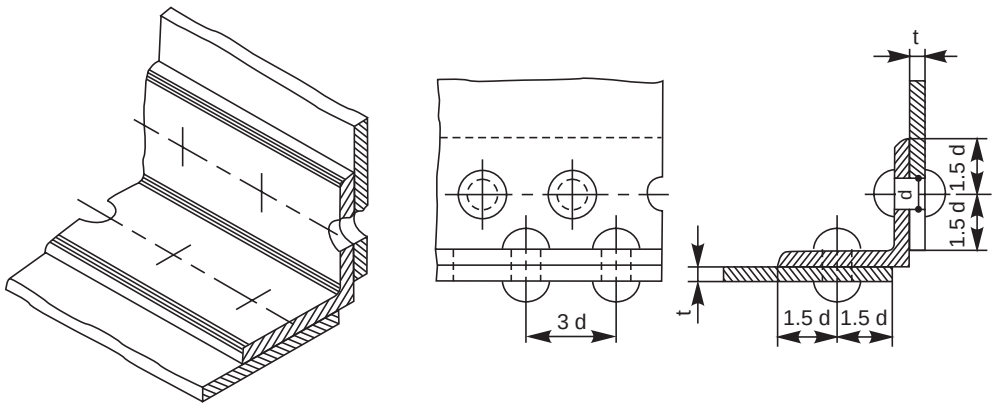

Fig. 10.5 Angle joint

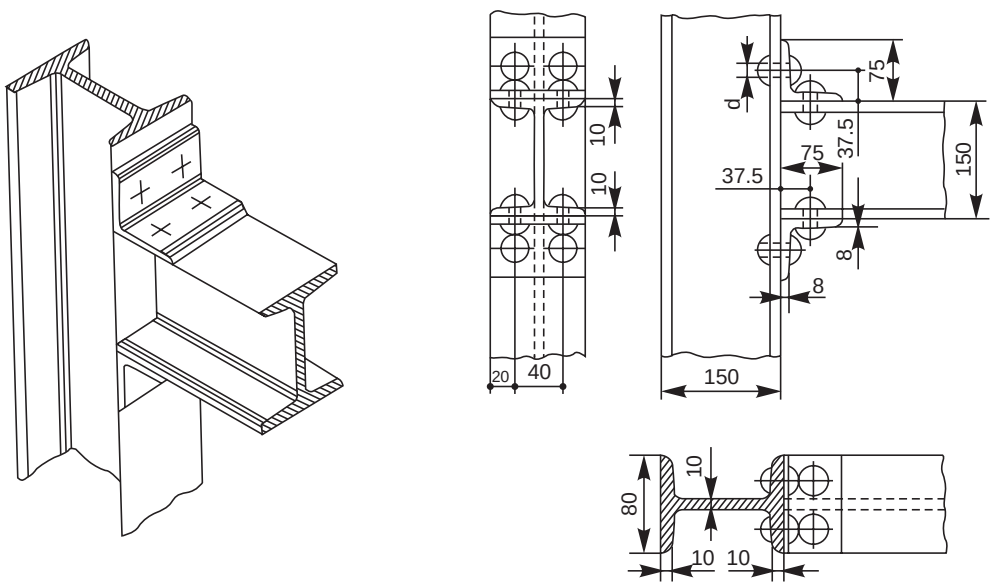

Fig. 10.6 Column and beam

www.EngineeringBooksPdf.com

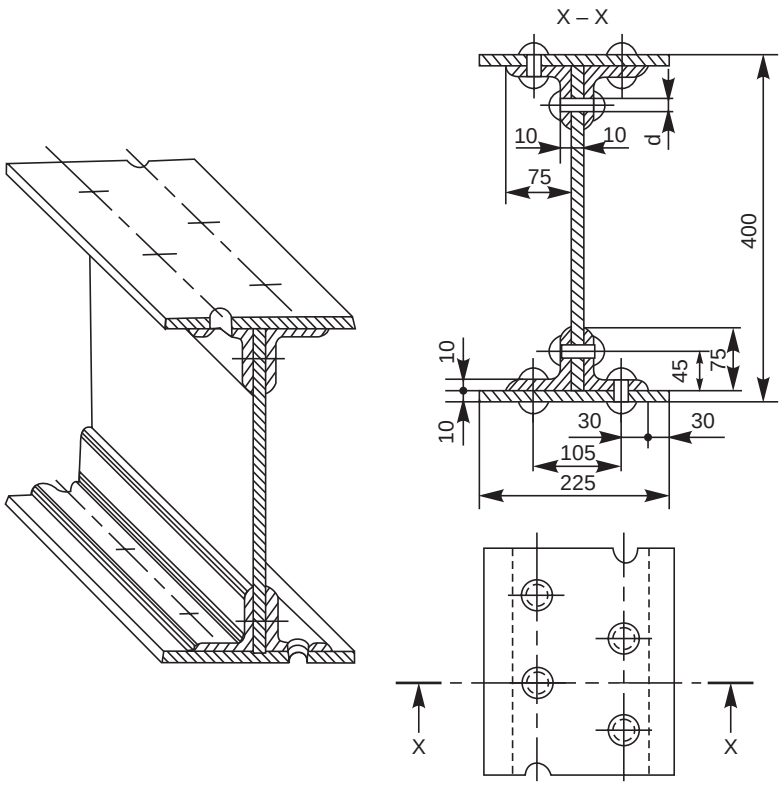

Fig. 10.7 Built-up girder

However, it should be noted that the length of the joint is decided by the load to be resisted by the joint.

10.5.1.1 Lozenze or Diamond Butt Joint

This is one kind of butt joint made either with a single or double strap. As the name implies, the rivets in this joint are arranged in a diamond shape. Figure 10.8 shows a double strap diamond butt joint. The joint is generally used to connect tie bars in bridge structures and roof trusses.

10.5.2 Boiler Joints

These joints are used mainly for joining metal sheets used in the construction of boilers, water tanks and pressure vessels. Obviously, these joints must be made air-tight, as the above vessels are required to retain fluids and withstand internal fluid pressure as well.

For manufacturing boilers, water tanks and pressure vessels, the edges of the plates to be joined (in case of lap joints only) are first bevelled. The plates are then rolled to the required curvature of the shell. Holding the plates together, holes are then drilled and riveting is followed.

Boiler joints are classified as: lap joints, butt joints and combination of lap and butt joints.

10.5.2.1 Lap Joints

In a lap joint, the plates to be riveted, overlap each other. The plates to be joined are first bevelled at the edges, to an angle of about 80° (Fig. 10.9). Depending upon the number of rows

www.EngineeringBooksPdf.com

of rivets used in the joint, lap joints are further classified as single riveted lap joint, double riveted lap joint and so on.

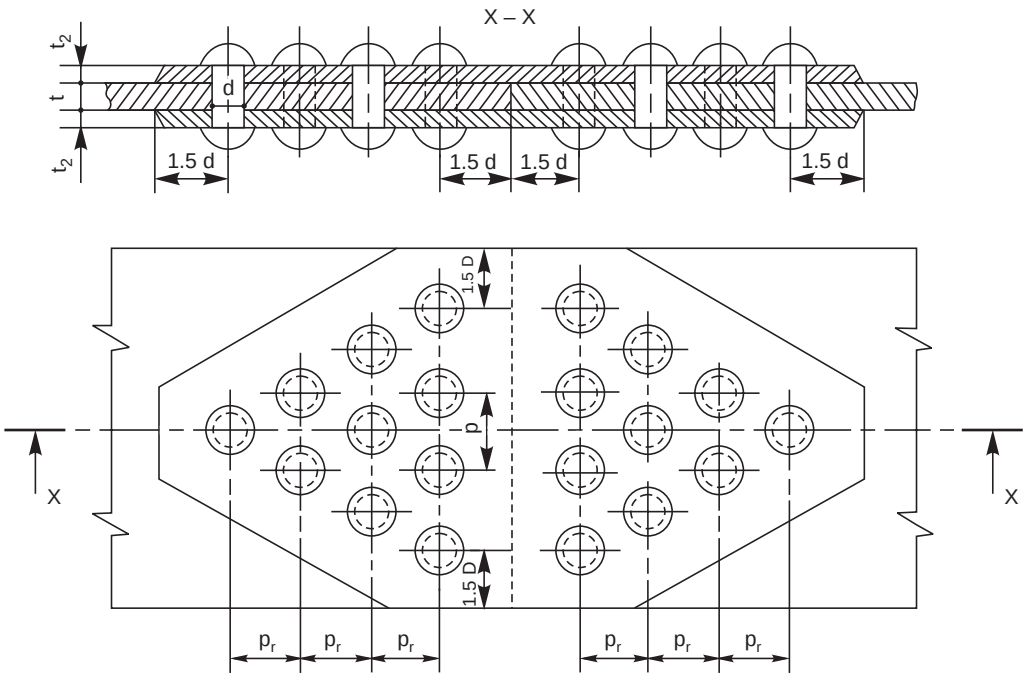

Fig. 10.8 Double strap diamond butt joint

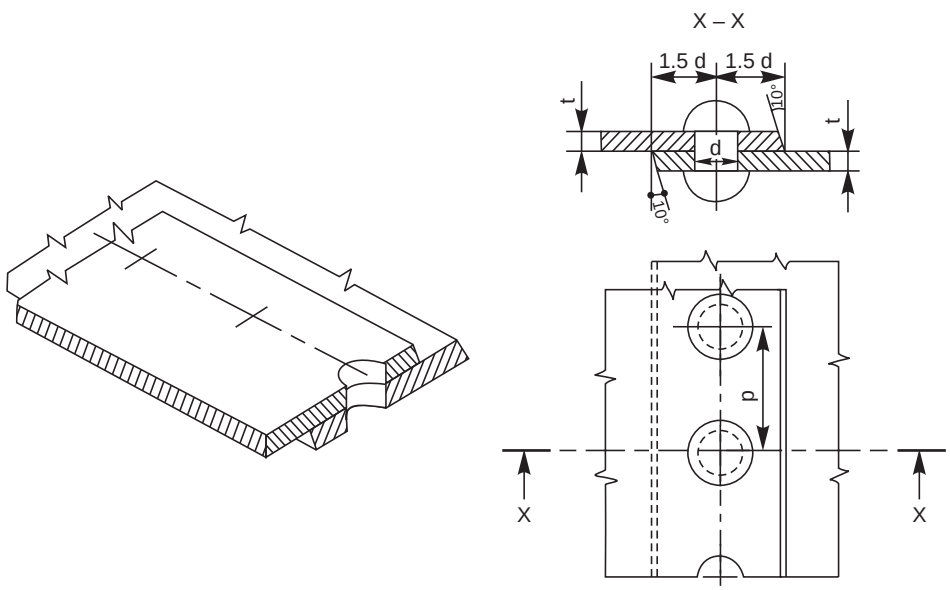

Fig. 10.9 Single riveted lap joint

In multi-row riveted joints, rows may be arranged either in chain or zig-zag fashion (refer articles 10.4.3 and 10.4.4 for explanation), as shown in Figs. 10.10 and 10.11.

www.EngineeringBooksPdf.com

Figure 10.9 shows a single riveted lap joint. The size of the rivet, d is taken as,

$d = 6\sqrt{t}$ mm where 't' is the thickness of the plates to be joined in millimetres.

Figures 10.10 and 10.11 show double riveted chain, lap joint and double riveted zig-zag lap joint respectively.

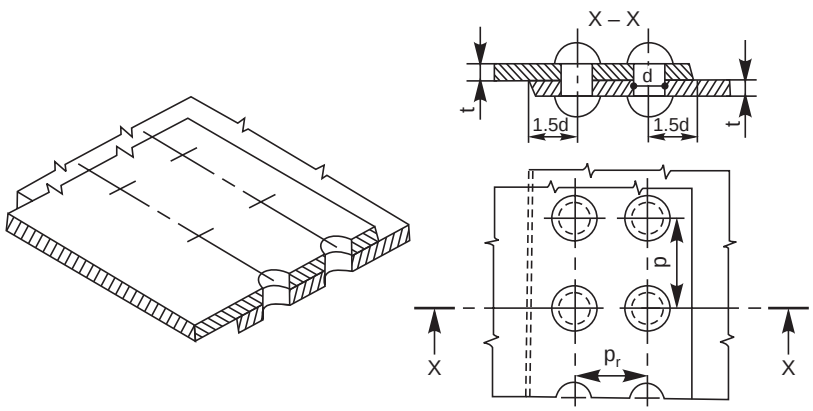

Fig. 10.10 Double riveted chain lap joint

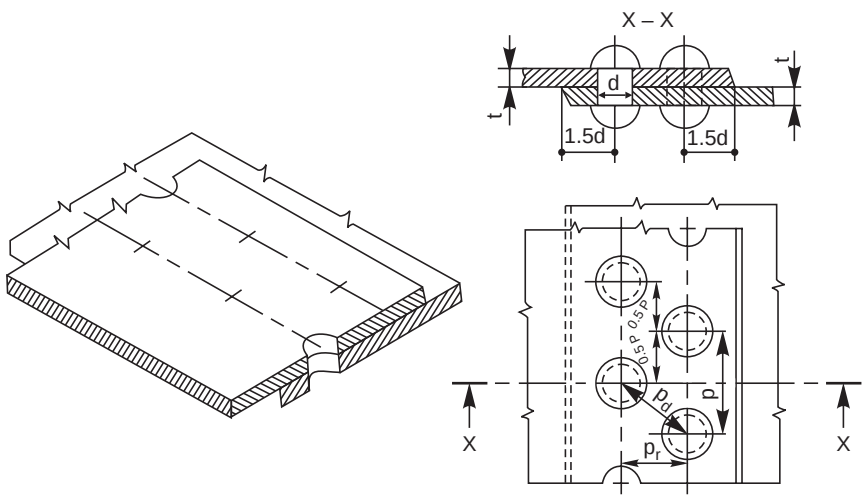

Fig. 10.11 Double riveted zig-zag lap joint

10.5.2.2 Butt Joints

In a butt joint, the plates to be joined, butt against each other, with a cover plate or strap, either on one or both sides of the plates; the latter one being preferred. In this joint, the butting edges of the plates to be joined are square and the outer edges of the cover plate(s) is(are) bevelled.

These joints are generally used for joining thick plates, and are much stronger than lap joints. Figures 10.12 and 10.13 show single riveted single strap and a single riveted double strap, butt joints respectively.

www.EngineeringBooksPdf.com

In a single strap butt joint, the thickness of the strap (cover plate) is given by, $t_1 = 1.125t$
If two straps are used, the thickness of each cover plate is given by, $t_2 = 0.75t$

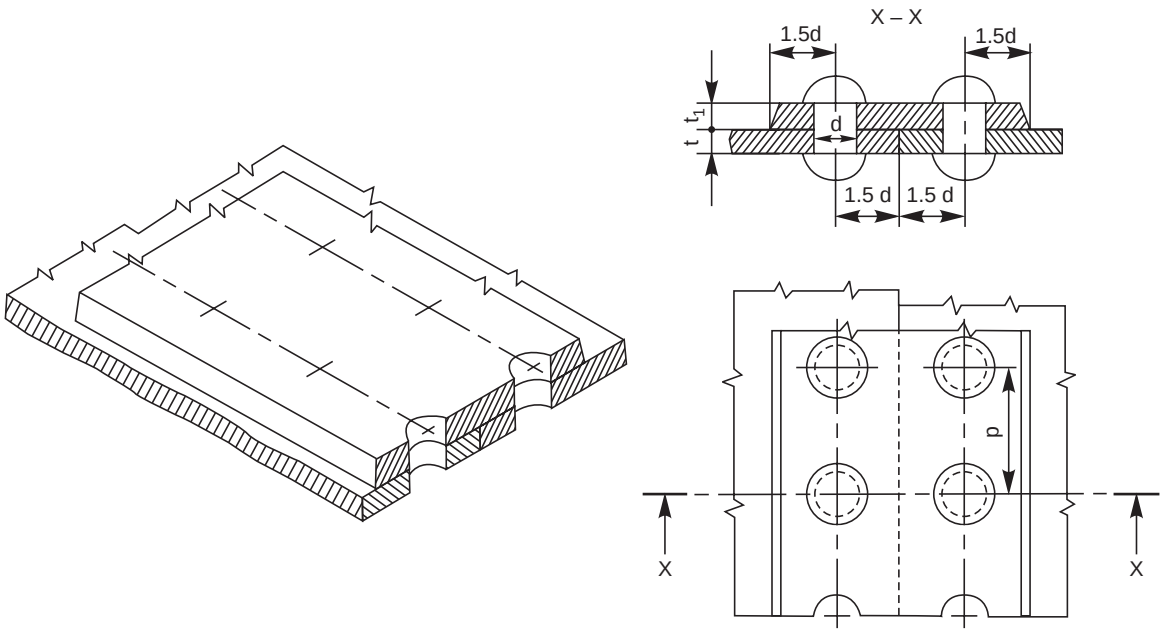

Fig. 10.12 Single riveted, single strap butt joint

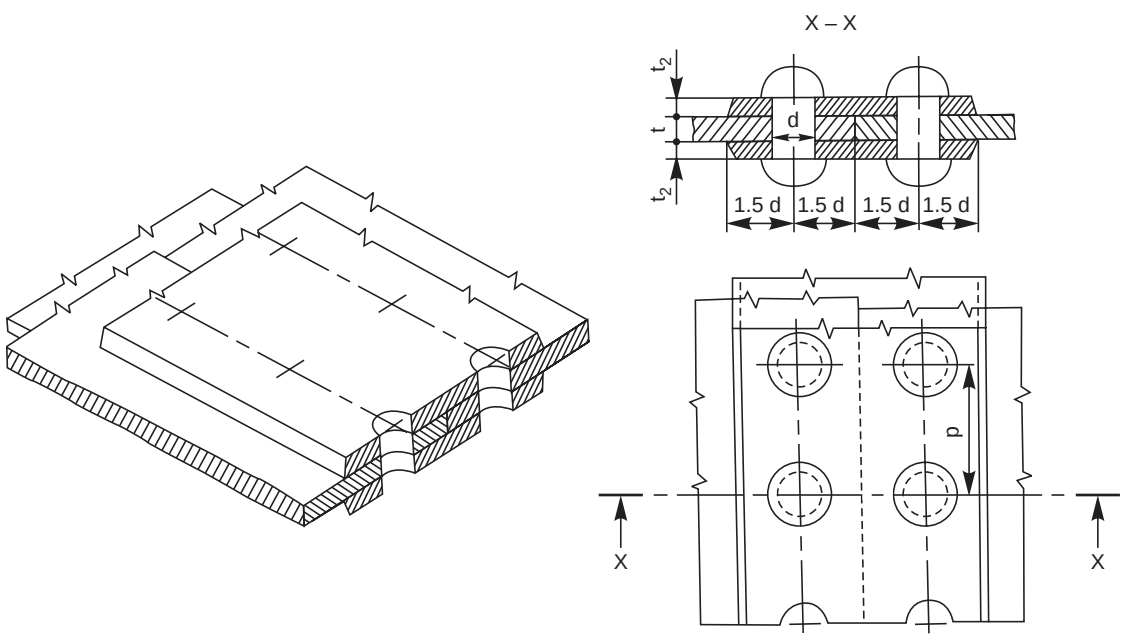

Fig. 10.13 Single riveted, double strap butt joint

www.EngineeringBooksPdf.com

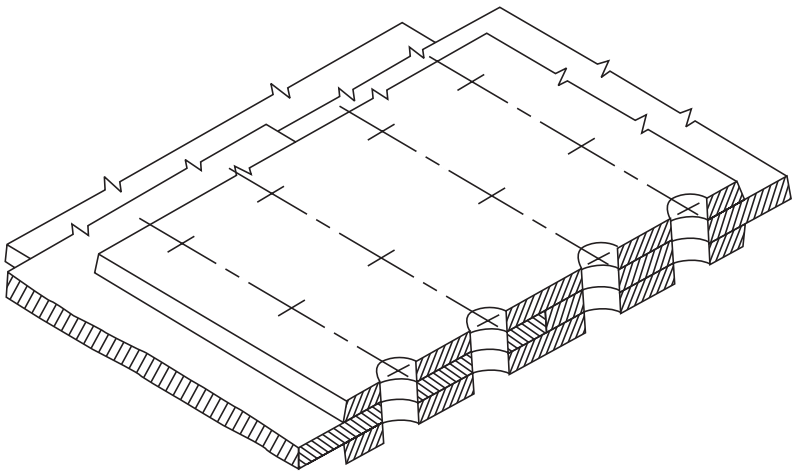

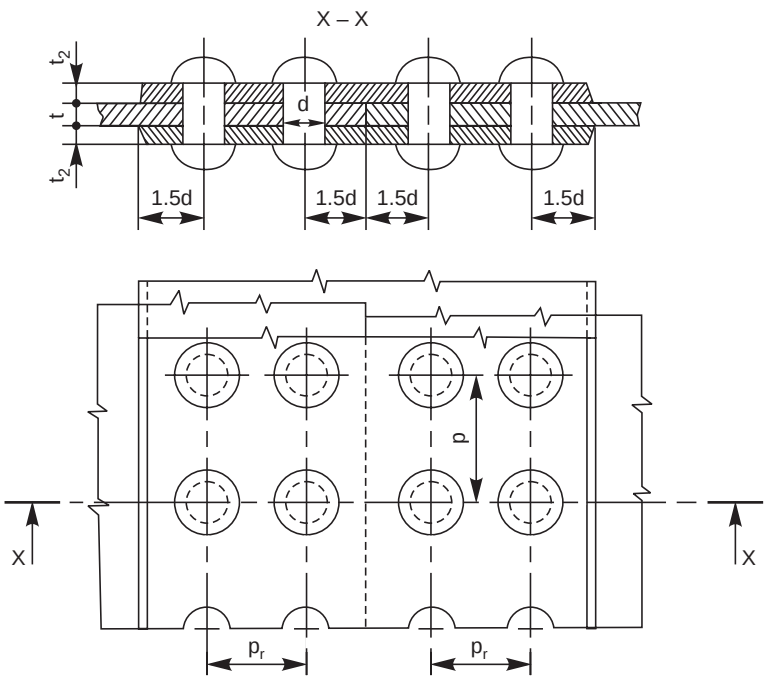

Fig. 10.14 Double riveted, double strap chain butt joint

Figures 10.14 and 10.15 show double riveted, double strap chain, butt joint and double riveted, double strap zig-zag butt joint.

www.EngineeringBooksPdf.com

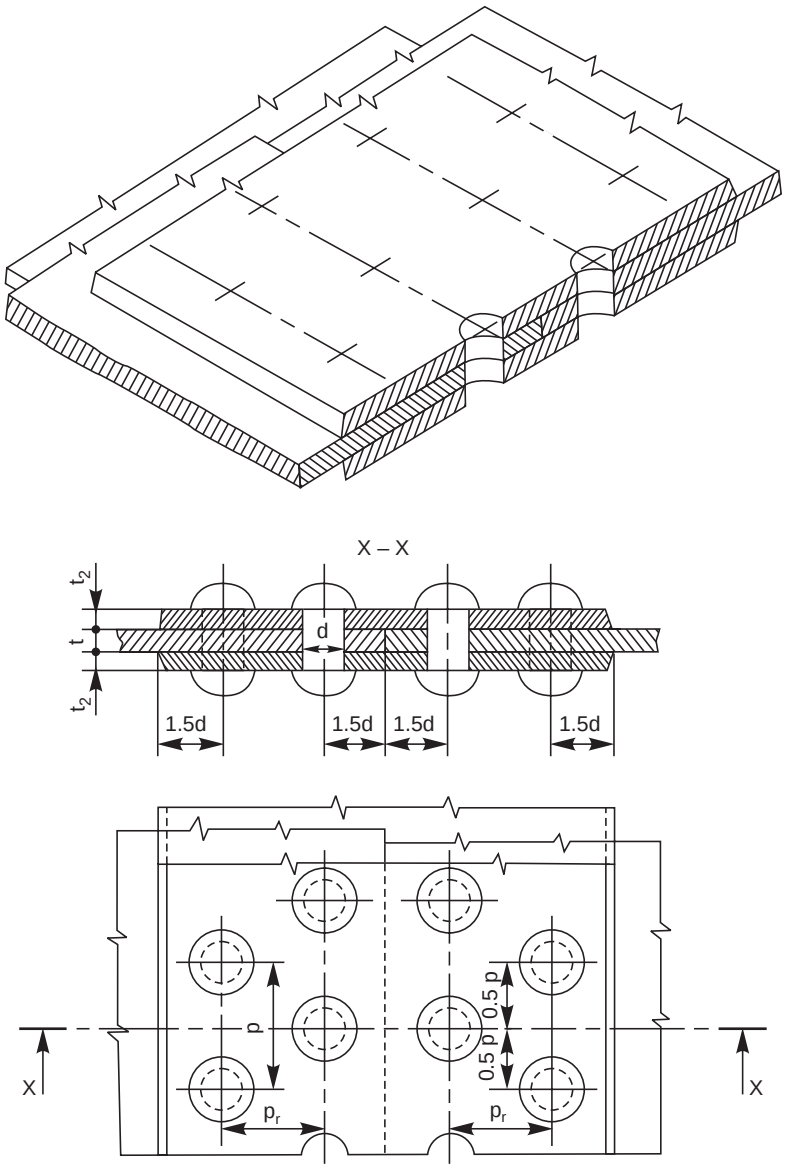

Fig. 10.15 Double riveted, double strap zig-zag butt joint

THEORY QUESTIONS

10.1 Name the commonly used materials for rivets.

10.2 Define the following :

(*a*) pitch, (*b*) row pitch, (*c*) diagonal pitch and (*d*) margin.

10.3 How are riveted joints made air-tight?

10.4 Name the different types of rivet heads as recommended by BIS : SP-46 : 1988.

10.5 What is a structural joint?

www.EngineeringBooksPdf.com

10.6 How are boiler joints classified?

10.7 Differentiate between :

(*a*) lap joint and butt joint, (*b*) chain riveting and zig-zag riveting

10.8 What is the function of a cover plate in riveted joints?

DRAWING EXERCISES

10.1 Giving proportionate dimensions, sketch any four forms of commonly used rivet heads, choosing the rivet diameter as 10 mm.

10.2 Sketch any two types of structural riveted joints, indicating proportionate dimensions.

10.3 Draw (*a*) sectional view from the front and (*b*) view from above, of the following riveted joints, to join plates of thickness 10 mm:

(*i*) single riveted lap joint, (*ii*) double riveted chain lap joint, (*iii*) double riveted zig-zag lap joint, (*iv*) single riveted, single strap butt joint, (*v*) single riveted, double strap butt joint (*vi*) double riveted, double strap, chain butt joint and (*vii*) double riveted, double strap, zig-zag butt joint.

10.4 Through sketches, illustrate the caulking and fullering operations.

www.EngineeringBooksPdf.com

WELDED JOINTS

11

11.1 INTRODUCTION

Welding is an effective method of making permanent joints between two or more metal parts. Cast iron, steel and its alloys, brass and copper are the metals that may be welded easily. Production of leak proof joints that can withstand high pressures and temperatures are made possible with advanced welding technology. For this reason, welding is fast replacing casting and forging wherever possible. When compared to riveting, welding is cheaper, stronger and simpler to execute at site with considerable freedom in design. Hence, it is widely used in ship building and structural fabrication in place of riveting.

11.2 WELDED JOINTS AND SYMBOLS

Basic terms of a welded joint are shown in Fig. 11.1 and the five basic types of joints are shown in Fig. 11.2.

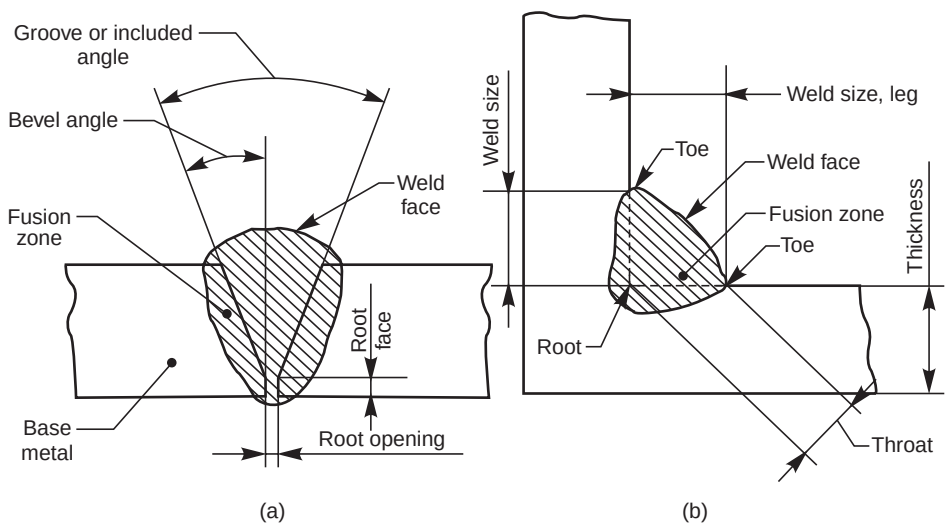

Fig. 11.1 (*a*) Butt weld (*b*) Fillet weld

Various categories of welded joints (welds) are characterized by symbols which, in general are similar to the shape of welds to be made. These symbols are categorised as:

www.EngineeringBooksPdf.com

(*i*) Elementary symbols (Table 11.1),

(*ii*) Supplementary symbols (Table 11.2),

(*iii*) Combination of elementary and supplementary symbols (Table 11.3) and

(*iv*) Combination of elementary symbols (Table 11.4).

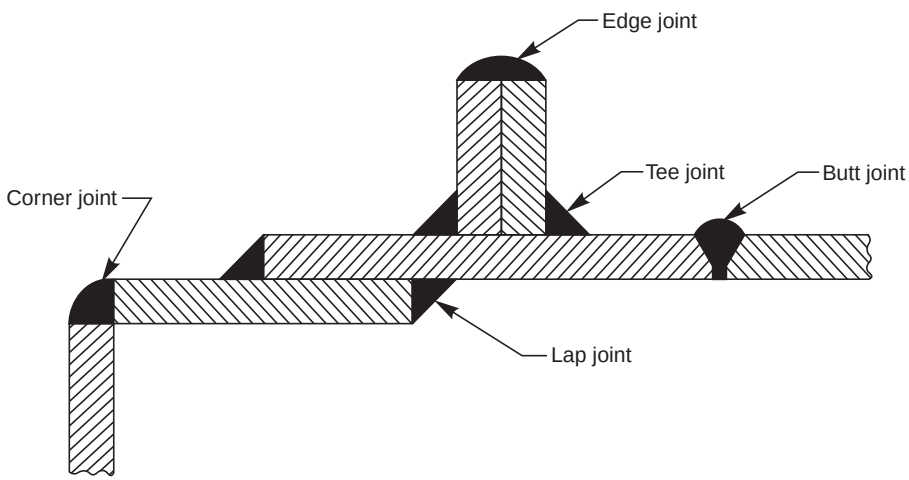

Fig. 11.2 Types of joints

11.2.1 Position of the Weld Symbols on the Drawings

The complete method of representation of the welds on the drawing comprises, in addition to the symbol (3), the following (Fig. 11.3):

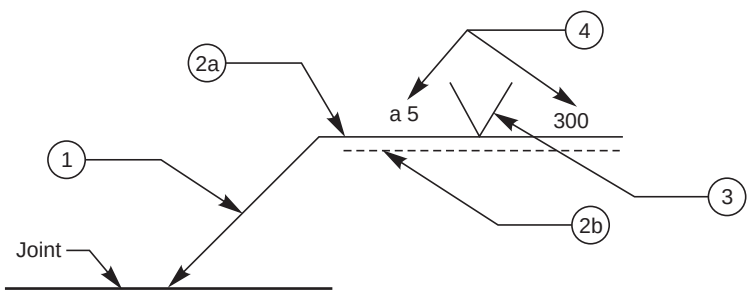

Fig. 11.3

(*i*) An arrow line (1) per joint,

(*ii*) A dual reference line, consisting of two parallel lines; one continuous and one dashed (2*a*, 2*b*) and

(*iii*) A certain number of dimensions (4) and conventional signs (3).

NOTE The dashed line may be drawn either above or below the continuous line (Fig. 11.8). For symmetrical welds, the dashed line is omitted.

www.EngineeringBooksPdf.com

Table 11.1 Elementary welding symbols

No.	*Designation*	*Illustration*	*Symbol*
1.	Butt weld between plates with raised edges (the raised edges being melted down completely)		
2.	Square butt weld		
3.	Single-V butt weld		
4.	Single-bevel butt weld		
5.	Single-V butt weld with broad root face		
6.	Single-bevel butt weld with broad root face		
7.	Single-U butt weld (parallel or sloping sides)		
8.	Single-U butt weld		
9.	Backing run; back or backing weld		
10.	Fillet weld	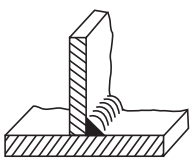	
11.	Plug weld; plug or slot weld		
12.	Spot weld	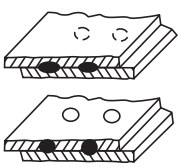	
13.	Seam weld	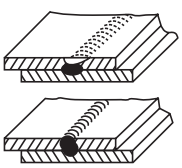	

www.EngineeringBooksPdf.com

Table 11.2 Supplementary welding symbols

Shape of weld surface	*Symbol*
(*a*) Flat (usually finished flush)	
(*b*) Convex	
(*c*) Concave	

Table 11.3 Combination of elementary and supplementary symbols

Designation	*Illustration*	*Symbol*
Flat (flush) single-V butt weld		
Convex double-V butt weld		
Concave fillet weld		
Flat (flush) single-V butt weld with flat (flush) backing run		

Table 11.4 Combination of elementary symbols (*contd.*)

No.	*Designation symbol (For number refer to Table 11.1)*	*Illustration*	*Representation*	*Symbolization*	
				either	*or*
1.	Square butt weld || 2 welded from both sides 2–2				
2.	Single-V butt weld V 3				

www.EngineeringBooksPdf.com

Table 11.4 Combination of elementary symbols

No.	*Designation symbol (For number refer to Table 11.1)*	*Illustration*	*Representation* 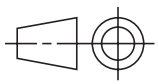	*Symbolization*	
				either	*or*
3.	and backing run 9 3–9	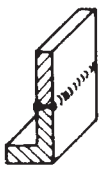	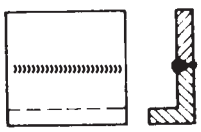	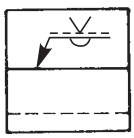	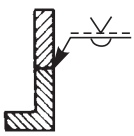
4.	Double-V butt weld 3 (X weld) 3–3		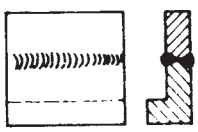	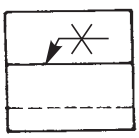	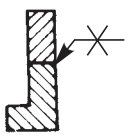
5.	Double bevel butt weld 4		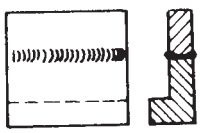	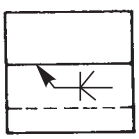	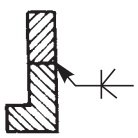
6.	(K weld) 4–4		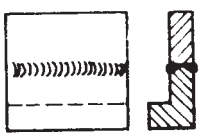	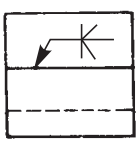	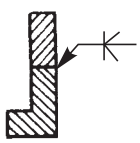
7.	Double-U butt weld 7 7–7	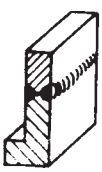	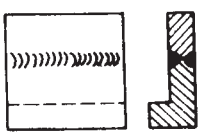	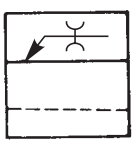	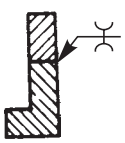
8.	Fillet weld 10 and fillet weld	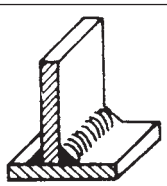	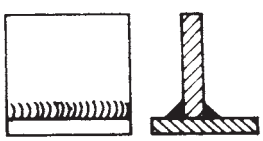	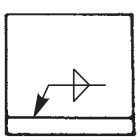	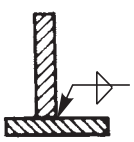
9	10 10–10	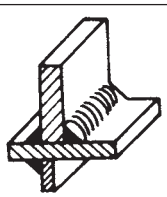	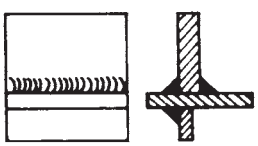	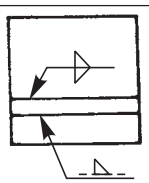	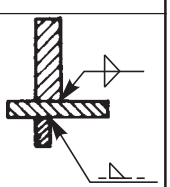

www.EngineeringBooksPdf.com

11.2.2. Conventional Signs

The two conventional signs used for welding as per BIS are a circle at the elbow (1), connecting the arrow and the reference line to indicate welding all around and, by a filled-in circle (2) at the elbow to indicate welding on site, as shown in Fig. 11.4*a*. These are shown, in addition to the weld symbols of the joint to be made.

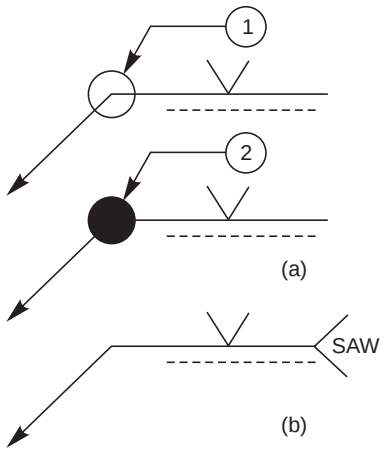

Fig. 11.4

Another convention as per International Standards Organisation, indicates the process of welding. For this, the abbreviation of the welding process is written as a note at the tail end of the arrow, forming a 90°V as shown in Fig. 11.4*b*. Here, SAW stands for submerged arc welding (Table 11.6).

11.2.3. Location of Welds

The location of the welds is specified by the following:

(*i*) Position of the arrow line,

(*ii*) Position of the reference line and

(*iii*) Position of the symbol.

11.2.4. Position of the Arrow Line

The arrow line joins one end of the continuous reference line, such that it forms an angle with it and is completed by an arrow head. Figure 11.5 shows the relation between the arrow line

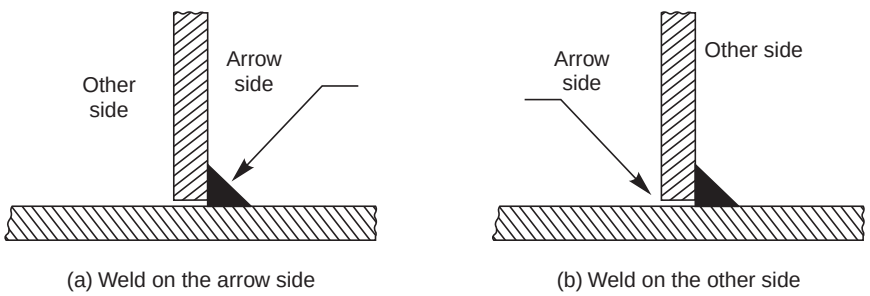

Fig.11.5 Arrow side and other side (*contd.*)

and the joint. The terms 'arrowside' and 'otherside' (in case of fillet welding) are used with respect to the continuous plate (Figs. 11.5 *c* and *d*). The position of the arrow line with respect

www.EngineeringBooksPdf.com

to the weld is generally of no special significance (Fig. 11.6). However, in the case of edge preparation (Refer No. 4, 6 and 8 in Table 11.1), the arrow line points towards the plate which is prepared (Fig. 11.7).

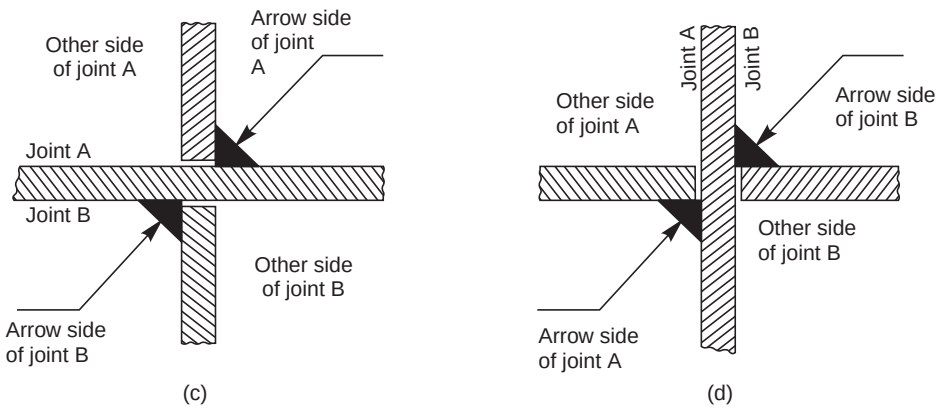

Fig. 11.5 Arrow side and other side

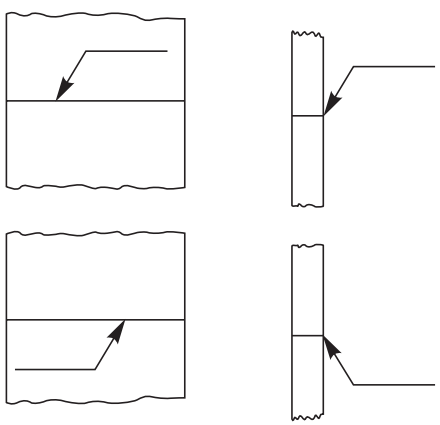

Fig. 11.6 Position of arrow lines

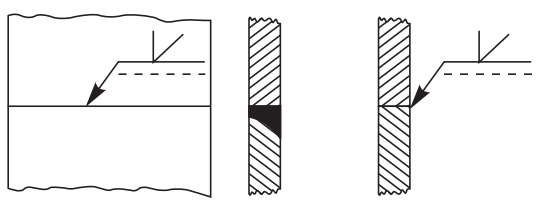

Fig. 11.7 Indication of edge preparation

11.2.5. Position of the Reference Line

The reference line shall preferably be drawn parallel to bottom edge of the drawing and if it is not possible; then it is drawn perpendicular.

11.2.6. Position of the Symbol

The symbol is placed either above or beneath the reference line as per the following regulation:

It is placed on the continuous side of the reference line, if the weld (weld face) is on the arrow side of the joint or on the dashed line side, if the weld is on the other side of the joint, as shown in Fig. 11.8.

www.EngineeringBooksPdf.com

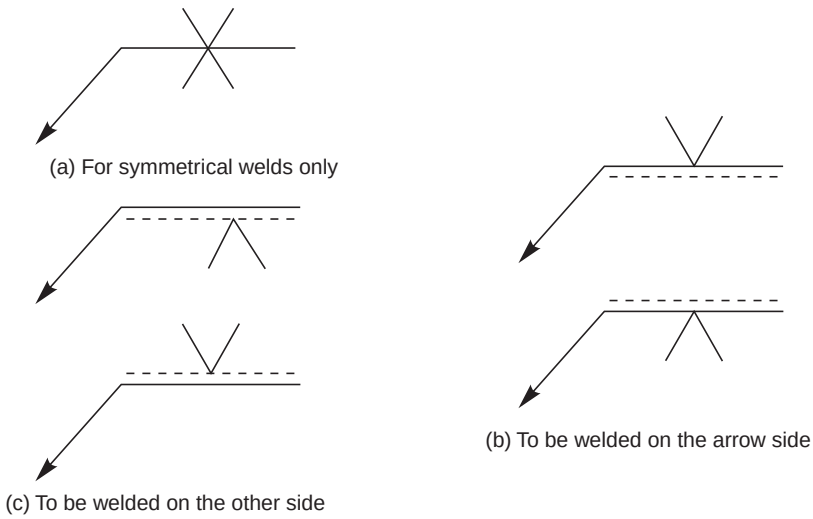

Fig. 11.8 Position of the symbol

11.3 DIMENSIONING OF WELDS

Each weld symbol may be accompanied by a certain number of dimensions. These dimensions are written as indicated in Fig. 11.9. It shows (*i*) the main dimensions relative to the cross-section, written on the left hand side of (before) the symbol and (*ii*) longitudinal dimension written on the right hand side of (after) the symbol.

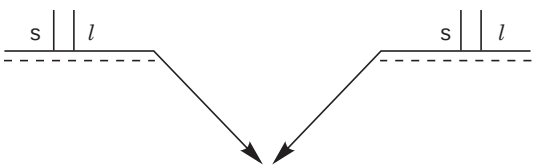

Fig. 11.9. Dimensioning of welds

NOTE The absence of any indication following the symbol, signifies that the weld is to be continuous over the whole length of the work piece.

11.3.1 Dimensioning Fillet Welds

There are two methods to indicate the dimensions of fillet welds as shown in Fig. 11.10. The letter *a* (throat thickness), or *z* (leg length) is always placed in front of the value of the corresponding dimension.

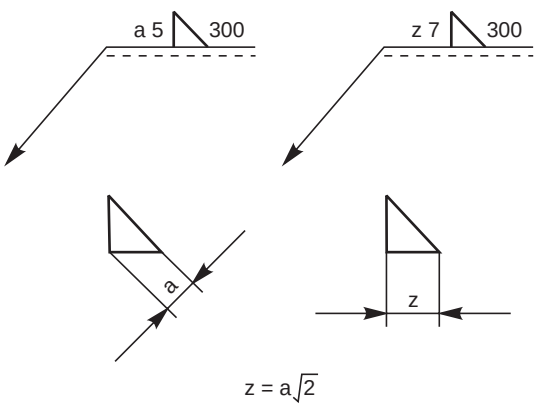

Fig. 11.10 Dimensioning-fillet welds

11.4 EDGE PREPARATION OF WELDS

The contours of edge preparation for butt welds are shown in Fig. 11.11.

The method of indicating the main dimensions and the rules for setting down these dimensions are illustrated in Table 11.5.

www.EngineeringBooksPdf.com

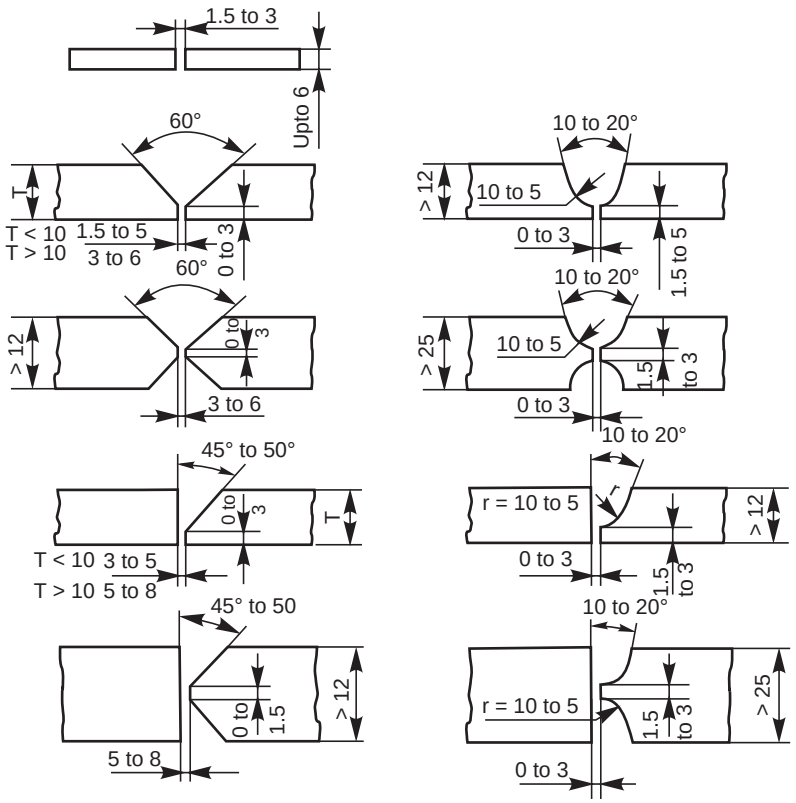

Fig. 11.11 Edge preparation

11.5 SURFACE FINISH

Finishing of welds other than cleaning, shall be indicated by suitable contour and finish symbols, viz., chipping C, machining M and grinding G. Where a weld is required to have approximately flush surface without any other method of finishing, a straight line should be added below the symbol to indicate it (Fig. 11.12).

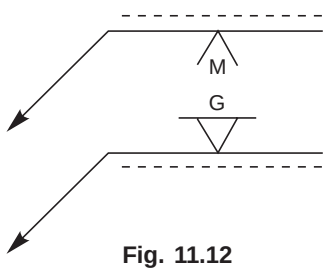

Fig. 11.12

11.6 RULES TO BE OBSERVED WHILE APPLYING SYMBOLS

1. Symbols for fillet and similar welds should be shown, such that the vertical portion of the symbols are indicated on the left hand side of the symbol, irrespective of the orientation of the weld metal.
2. If the welds are to be made on the arrow side of a joint, the corresponding symbol should be placed either above or below the cotinuous reference line (Fig. 11.8).
3. If the welds are to be made on the other side of a joint, the corresponding symbol should be placed above or below the dashed reference line (Fig. 11.8).
4. If the welds are to the made on both sides of a joint, the corresponding symbols should be placed on both sides of the reference line and the dashed line is not shown (Fig. 11.8).

www.EngineeringBooksPdf.com

Table 11.5 Dimensioning of welds

No.	*Designation of welds*	*Definition*		*Inscription*
1.	Butt weld	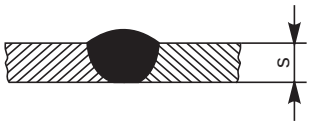	s : minimum distance from the surface of the part to the bottom of the penetration which cannot be greater than the thickness of the thinner part	
		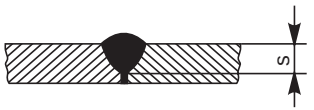		s
				s
2.	Continuous fillet weld	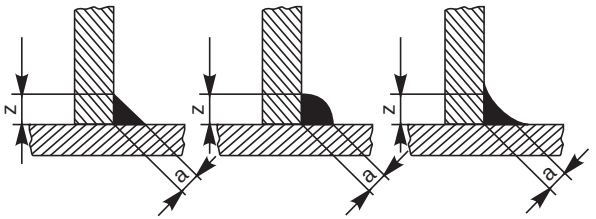	a : height of the largest isosceles triangle that can be inscribed in the section z : side of the largest isosceles triangle that can be inscribed in the section	a z
3.	Intermittent fillet weld	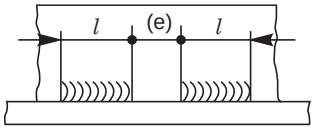	*l* : length of weld (without end craters) e : distance between adjacent weld elements n : number of weld elements a, z : (see No. 2)	a n × *l*(e) z n × *l*(e)
4.	Spot weld	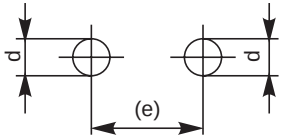	n : (see No. 3) (e) : spacing d : diameter of spot	d n × (e)

www.EngineeringBooksPdf.com

5. The arrow of the symbol must point towards the joint which requires welding (Fig. 11.6).
6. When only one member is to be edge prepared to make the joint, the arrow should point at that plate (Fig. 11.7).
7. Dimensions of size are indicated in mm without writting the unit mm. The letter ***a*** or ***z*** is placed in front of the value of the fillet size, depending upon whether the throat or leg and length of the weld is shown on the right hand side. If no length is given, it implies that full length is to be welded (Table 11.5).
8. If unequal legs of fillet are to be used, they should also be given on the left hand side.
9. If a weld is to be made all around a joint, a circle should be placed at the elbow, connecting the arrow to the reference line (Fig. 11.4 *a*).
10. If a weld is required to be made on the site or during erection or assembly, it is represented by a filled-in circle at the elbow, connecting the arrow and the reference line (Fig. 11.4 *a*)
11. If a weld is to have a flush or flat finish, a straight line should be added above the symbol.
12. The welding process is indicated, if required, at the end of the arrow (Fig. 11.4 *b*).

11.7 WELDING PROCESS DESIGNATIONS (ABBREVIATIONS)

In special cases, the technique of welding is indicated along with the welding symbol as a convention. To avoid lengthy notes, the abbreviations (Table 11.6) are written as a note. In some cases, code number is given with a foot note on the drawing near the title block.

11.8 EXAMPLES

The assembly drawing of a shaft support fabricated by welding is shown in Fig. 11.13 *c*, using the conventional weld symbols.

The drawing of the individual components (part drawings) with edge preparation wherever necessary, before they are joined by welding, are shown in Fig. 11.13 *a*. The isometric view of the assembly is shown in Fig. 11.13 *b*.

Table 11.6 Welding process designations

Designation	*Welding process*	*Designation*	*Welding process*
CAW	Carbon arc welding	IB	Induction brazing
CW	Cold welding	IRB	Infra red brazing
DB	Dip brazing	OAW	Oxy-acetylene welding
DFW	Diffusion welding	OHW	Oxy-hydrogen welding
EBW	Electron beam welding	PGW	Pressure gas welding
ESW	Electro slag welding	RB	Resistance brazing
EXW	Explosion welding	RPW	Projection welding
FB	Furnace brazing	RSEW	Resistance seam welding
FOW	Forge welding	RSW	Resistance spot welding
FRW	Friction welding	RW	Resistance welding
FW	Flash welding	SAW	Submerged arc welding
GMAW	Gas metal arc welding	TB	Torch brazing
GTAW	Gas tungsten arc welding	UW	Upset welding

www.EngineeringBooksPdf.com

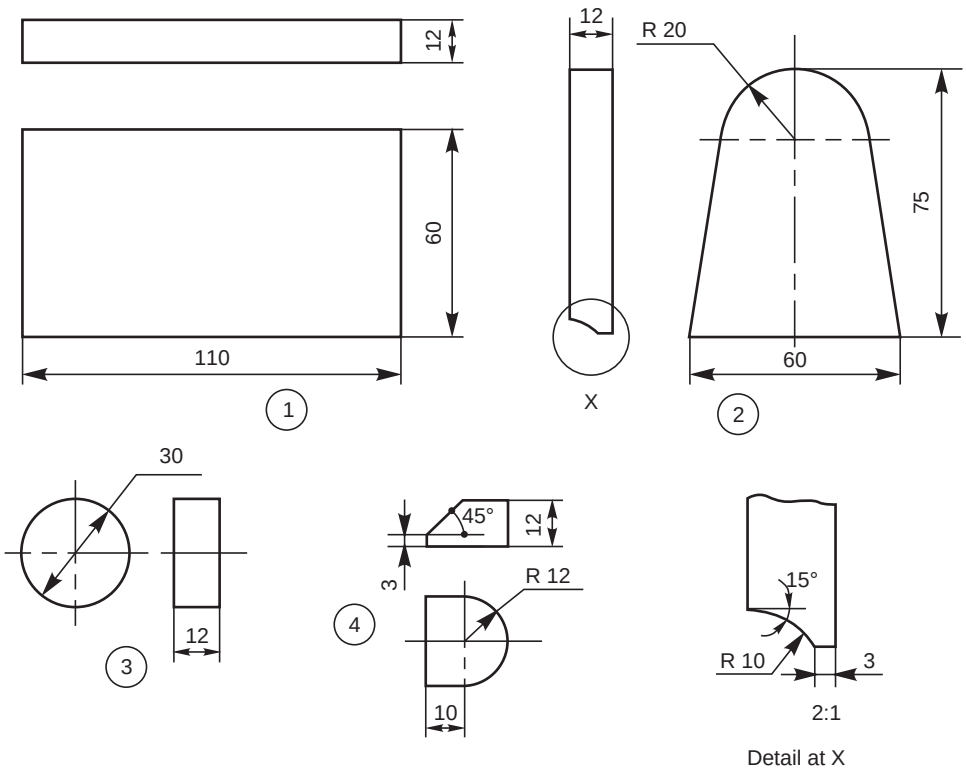

(a)

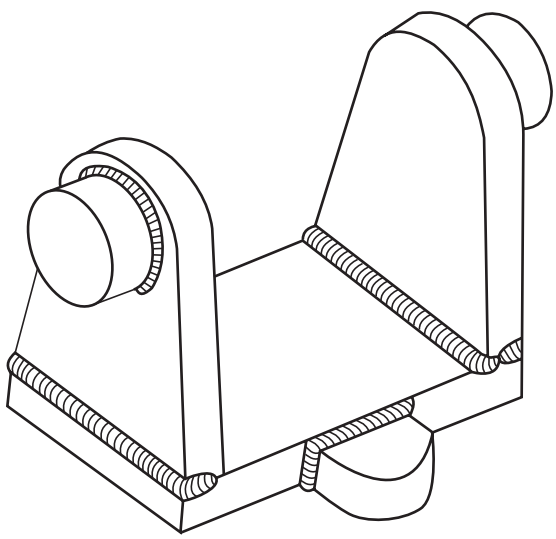

(b)

Fig. 11.13 Shaft support (*contd.*)

www.EngineeringBooksPdf.com

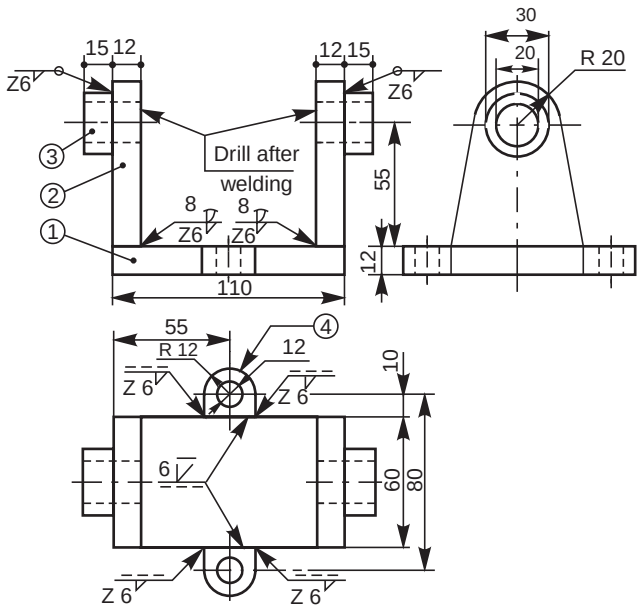

(c)

Fig. 11.13 Shaft support

THEORY QUESTIONS

11.1 What is welding and what type of fastesning is it?
11.2 What are the advantages of welding over riveting?
11.3 What are the materials that can be joined by welding?
11.4 By what means, the location of a weld is specified?
11.5 Categorise the welding symbols.
11.6 How is a weld shown on the drawing?
11.7 Explain the meaning of "arrowside" and "other-side", with reference to welded joints.
11.8 Why the edges of various parts to be welded are prepared?
11.9 What are the important rules to be observed while applying weld symbols?
11.10 Give the welding process abbreviations, for the following:
(*a*) Explosion welding,
(*b*) Electro-slag welding,
(*c*) Forge welding, and
(*d*) Oxy-acetylene welding.
11.11 Explain the following welding process symbols:
(*a*) CAW (*b*) GMAW
(*c*) GTAW (*d*) OAW
(*e*) EBW (*e*) RW

DRAWING EXERCISES

11.1 Through sketches, indicate the various types of welding joints.
11.2 Sketch and explain the two conventional signs used for welding as per BIS.
11.3 Sketch the following welding symbols along with the respective illustrations:
(*a*) Single V-butt weld,
(*b*) Single bevel butt weld,

www.EngineeringBooksPdf.com

(*c*) Single U-butt weld,
(*d*) Single J-butt weld,
(*e*) Fillet weld, and
(*f*) Convex double V-butt weld.

11.4 Explain the meaning of each weld shown in Figs. 11.14 to 11.17 and sketch the part drawings.

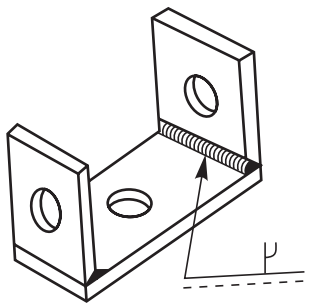

Fig. 11.14

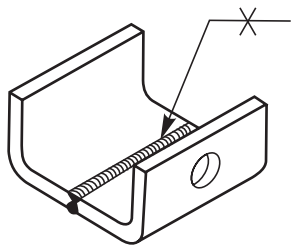

Fig. 11.15

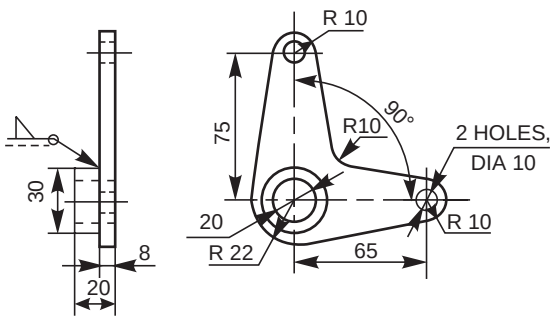

Fig. 11.16

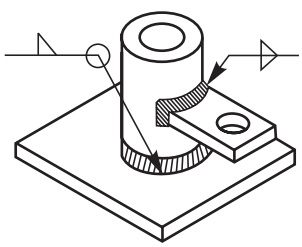

Fig. 11.17

11.5 Suggest suitable welding joints to fabricate the swing bracket shown in Fig. 11.18.

11.6 Indicate appropriate welded joints shown by symbols to fabricate the structural joints shown in Figs. 11.19 and 11.20.

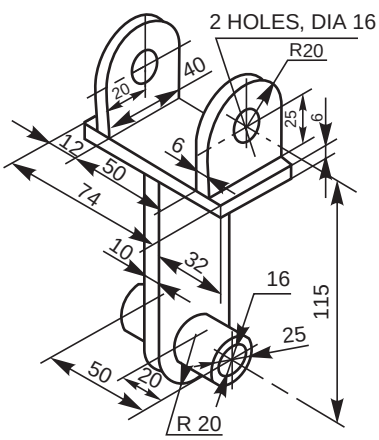

Fig. 11.18

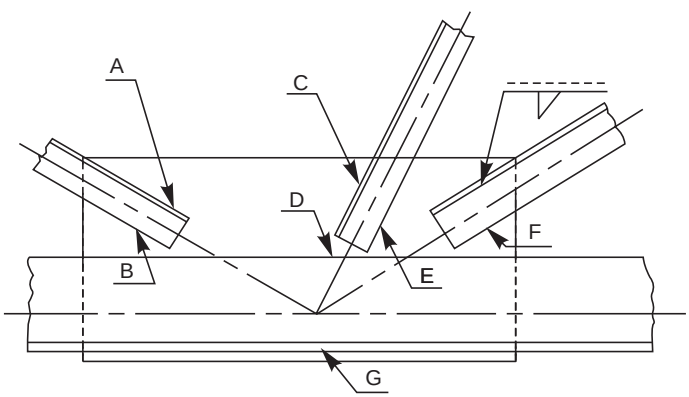

Fig. 11.19

www.EngineeringBooksPdf.com

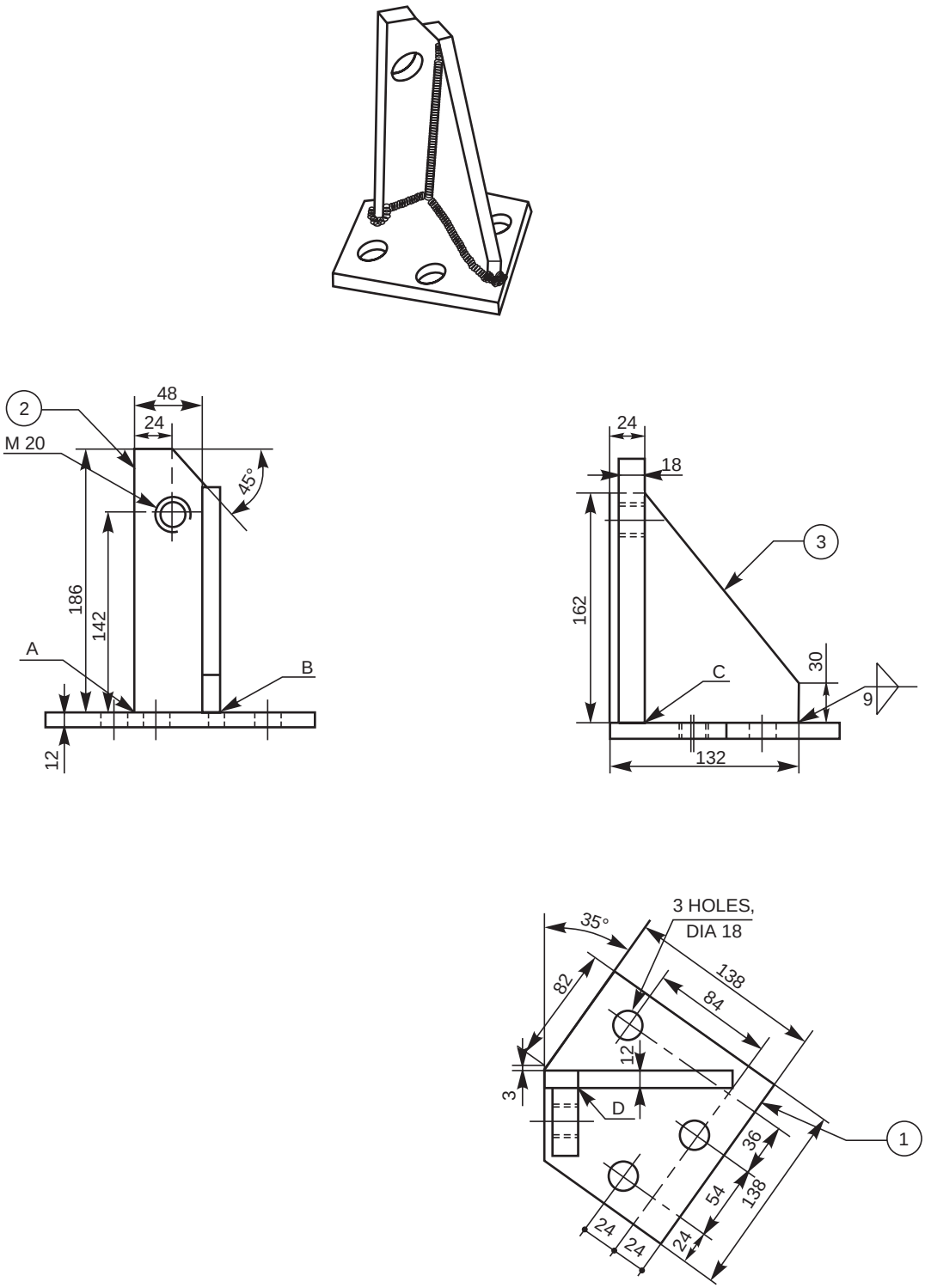

Fig. 11.20

www.EngineeringBooksPdf.com

12

BEARINGS

12.1 INTRODUCTION

Bearings are supports for shafts, providing stability, and free and smooth rotation. The importance of bearings may be understood from the supporting requirement of machine tool spindles, engine crankshafts, transmission or line shafts in workshops, etc. Bearings are broadly classified into two categories: sliding contact bearings and rolling contact bearings or anti-friction bearings.

12.2 SLIDING CONTACT BEARINGS

Sliding contact bearings are those in which the rotating shaft has a sliding contact with the bearing and the friction is relatively high. Hence, these bearings require more lubrication. According to the direction in which the bearing is loaded, these bearings are further classified as: journal bearings and thrust bearings.

12.2.1 Journal Bearings

When the load on a bearing is perpendicular (normal) to the shaft axis, the bearing is known as a journal bearing. In fact, the term 'journal', refers to that part of the shaft which is in contact with the bearing (Fig.12.1). The following are some of the types of journal bearings:

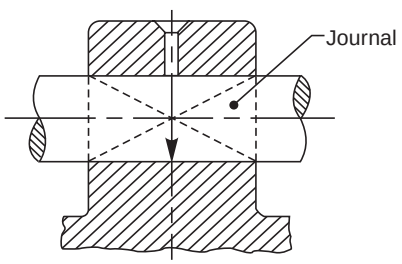

Fig. 12.1 Journal bearing-representation

12.2.1.1 Solid Journal Bearing

This is the simplest among the journal bearings, and usually made of cast iron. This consists of a cylindrical block with a rectangular base. The hole in the cylindrical block supports the shaft and the holes in the base are used for bolting down the bearing. A hole provided at the top of the body is used for introducing lubricant into the bearing (Fig. 12.2). The drawback of this bearing is the absence of provision for adjustment in case of wear and hence it has to be discorded. Hence, this is used when the load on the bearing is small and the wear is immaterial.

12.2.1.2 Bushed Journal Bearing

This bearing consists of mainly two parts, the body and the bush. The body is usually made of cast iron and the bush of soft materials such as brass, bronze or gunmetal. The bush is press fitted in the body; preventing relative axial and rotary motion. With this arrangement, to renew the bearing, it is only necessary to renew the bush. The oil hole provided at the top of the body and running through the bush is used to introduce the lubricant (Fig. 12.3).

www.EngineeringBooksPdf.com

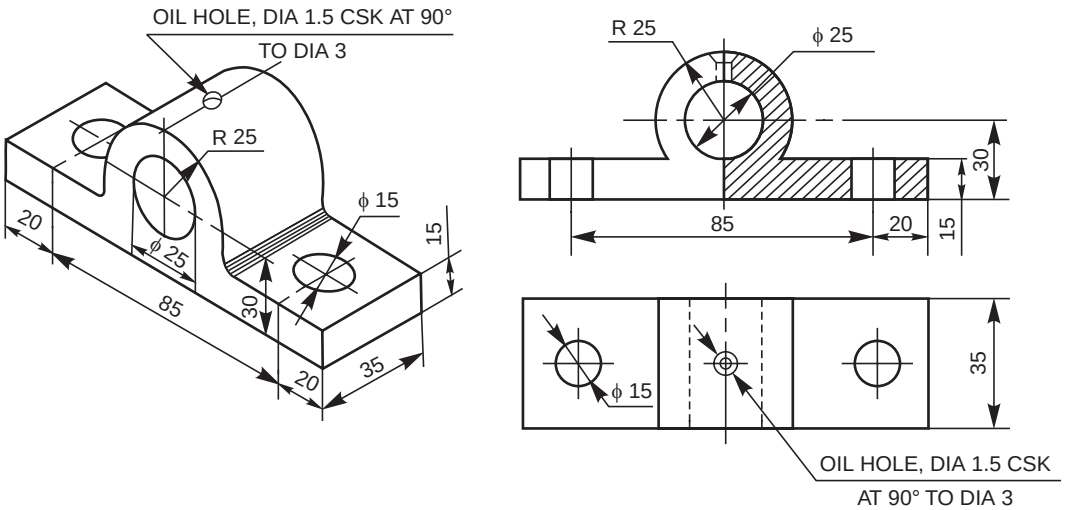

Fig. 12.2 Solid journal bearing

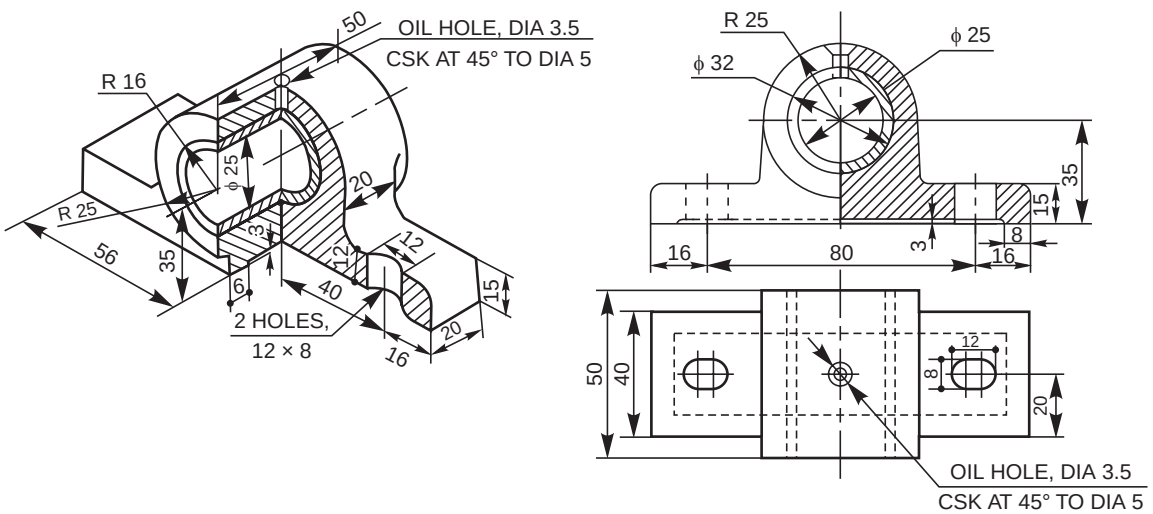

Fig. 12.3 Bushed journal bearing

12.2.1.3 Pedastal Bearing (Plummer Block)

This bearing is used for long shafts, requiring intermediate support, especially when the shaft cannot be introduced in the bearing end-wise. It consists of a pedastal or base, a cap and a bush, split into two halves, called 'bearing brasses'. The split parts used in the assembly, facilitate easy assembly and periodical replacement of the worn-out brasses.

After placing the journal on the lower half of the bush, kept in the base, the upper half of the bush is placed and the cap is then fixed to the pedastal, by means of two bolts (Fig. 12.4). Flanges are provided at either end of the bush, to prevent its axial motion. The rotary motion of the bush is prevented by a snug provided at the bottom of the lower brass, fitting into a corresponding hole in the base.

www.EngineeringBooksPdf.com

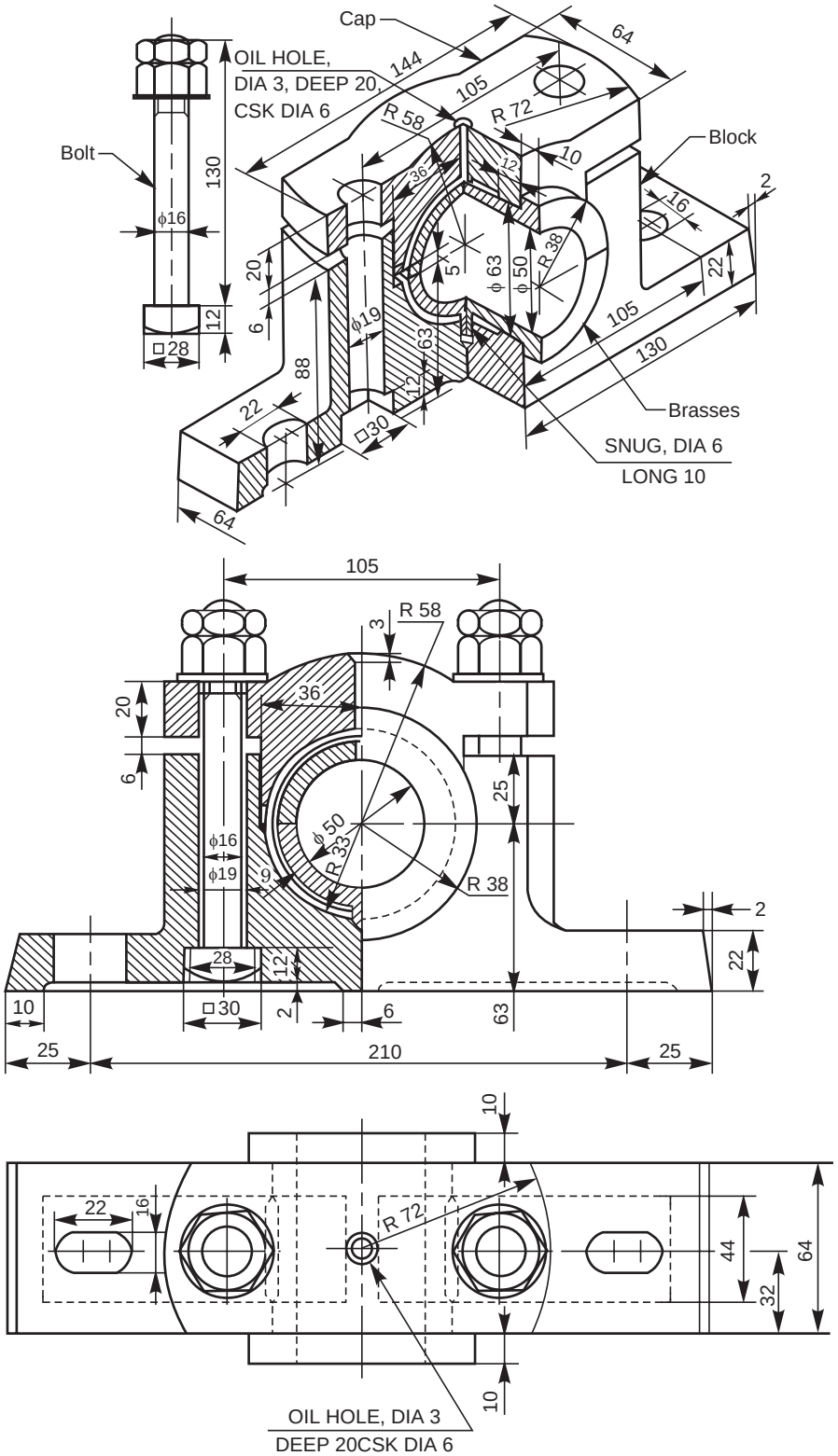

Fig. 12.4 Plummer block

www.EngineeringBooksPdf.com

Instead of a snug, the brasses may be provided with square or octogonal seatings to prevent relative movement. The polygonal shaped seatings provided adjacent to the flages, fit into the corresponding recesses in the base and the cap. The seatings used are narrow in width to reduce the amount of machining (Fig. 12.5).

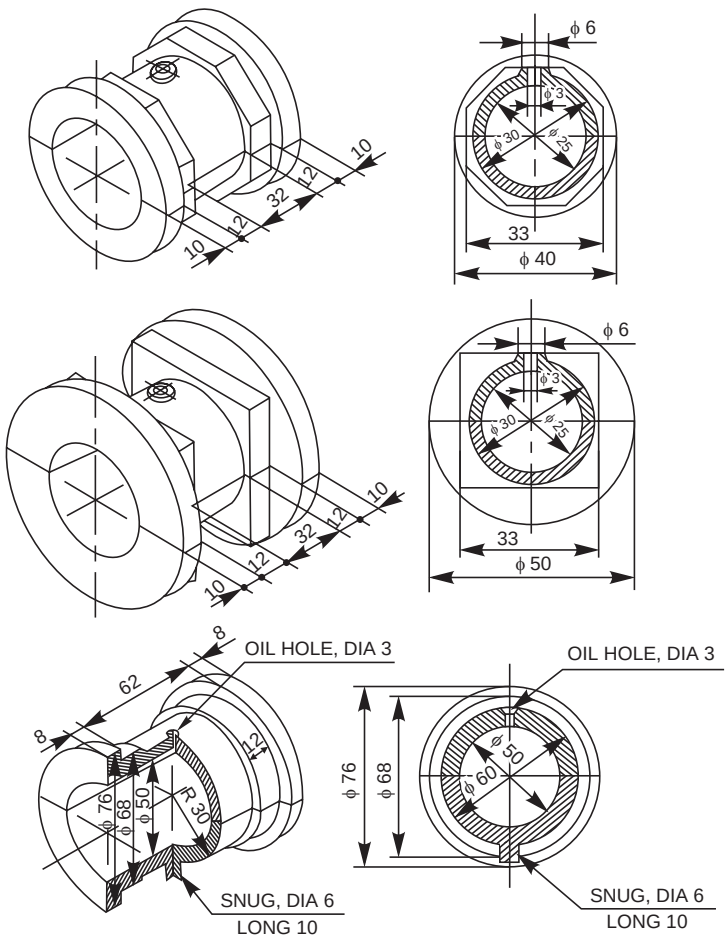

Fig. 12.5 Brasses

12.2.1.4 Bracket and Hanger Bearings

Brackets and hangers with bearings mounted, are used to support transmission or line shafts. However, in some cases, a part of the bearing housing may be cast integral with the bracket or hanger.

Bracket bearings

Bracket bearing supports a shaft running parallel to and near a wall or near a row of pillars. The vertical plate of the bracket is bolted to the wall or pillar; the number of bolts used depends upon the size and shape of the bracket.

Wall brackets

In the case of a wall bracket, the size of the bracket depends upon the biggest size of the pulley that is to be mounted on the shaft. Fig. 12.6 shows a wall bracket with a pedastal bearing mounted on it. It may be noted from the figure, that the pedastal is integrally cast with the bracket.

www.EngineeringBooksPdf.com

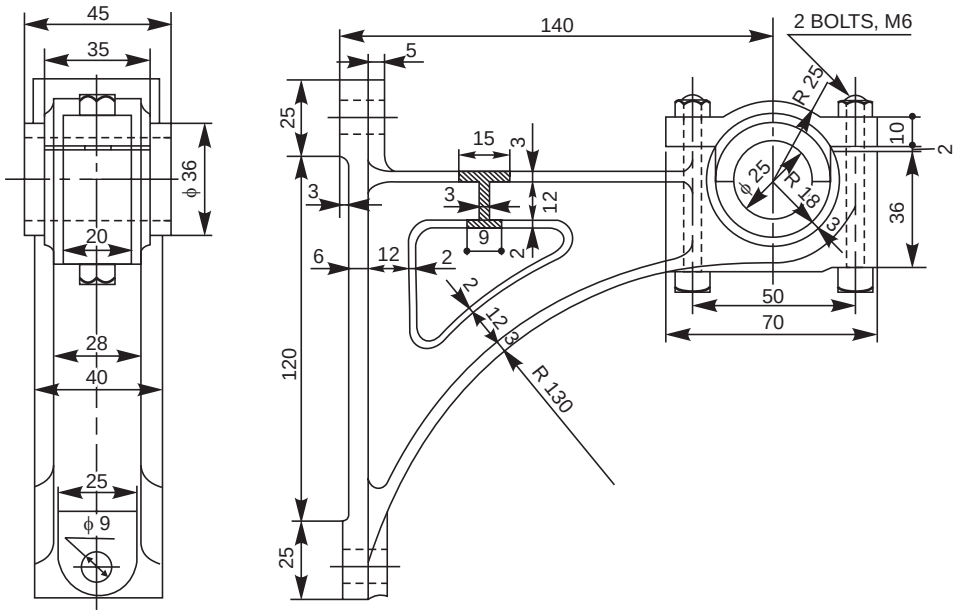

Fig. 12.6 Wall bracket with a pedastal bearing

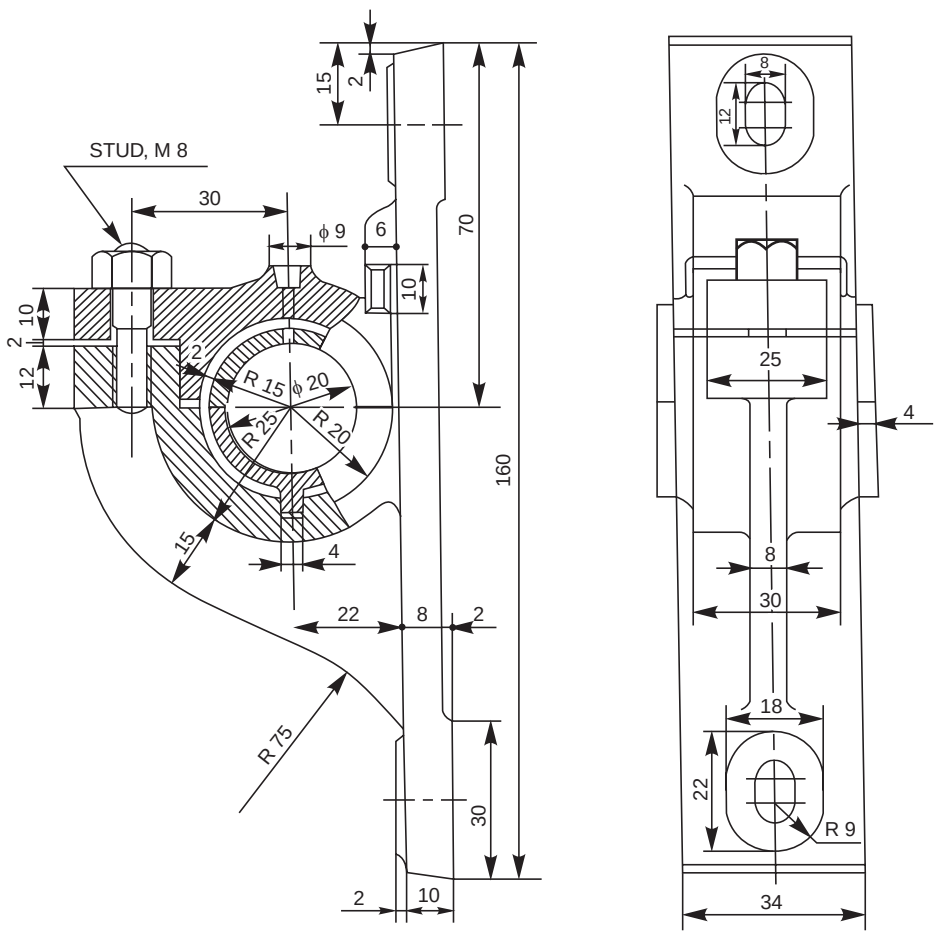

Fig. 12.7 Pillar bracket with a pedestal bearing

www.EngineeringBooksPdf.com

Pillar brackets

Figure 12.7 shows a pillar bracket, with a pedastal bearing mounted on it; the main body being integral with the bracket. It may be noted from the figure that this bracket has the minimum overhang when compared with a wall bracket. This is because, in the case of a piller bracket, the pulleys mounted on the shaft do not interfere with the pillar.

Hanger bearings

Hanger bearings support a shaft running parallel to a beam or ceiling of a room. The hangers are suspended by means of bolts and nuts. These are generally named after their shapes; the most commonly used types being J-hangers and U-hangers.

In the case of a J-hanger, the bearing is supported by a single arm and in the case of a U-hanger, the bearing is supported between two arms. Figure 12.8 shows the J-type hanger with the pedastal bearing integral with the hanger body.

12.2.1.5 Thrust Bearings

Thrust bearings are used to support shafts subjected to axial loads. These bearings are classified into: pivot or foot-step bearings and collar bearings.

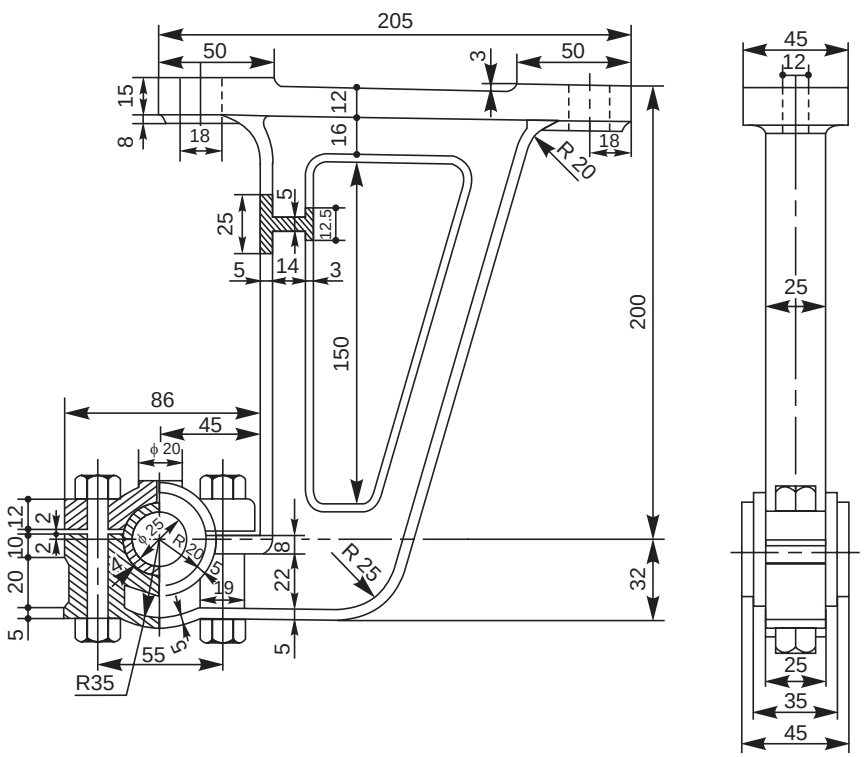

Fig. 12.8 J-hanger with a pedastal bearing

Pivot or foot-step bearing

This bearing is used to support a vertical shaft under axial load. Further, in this, the shaft is terminated at the bearing. The bottom surface of the shaft rests on the surface of the bearing which is in the form of a disc. The bush fitted in the main body supports the shaft in position and takes care of possible radial loads coming on the shaft.

www.EngineeringBooksPdf.com

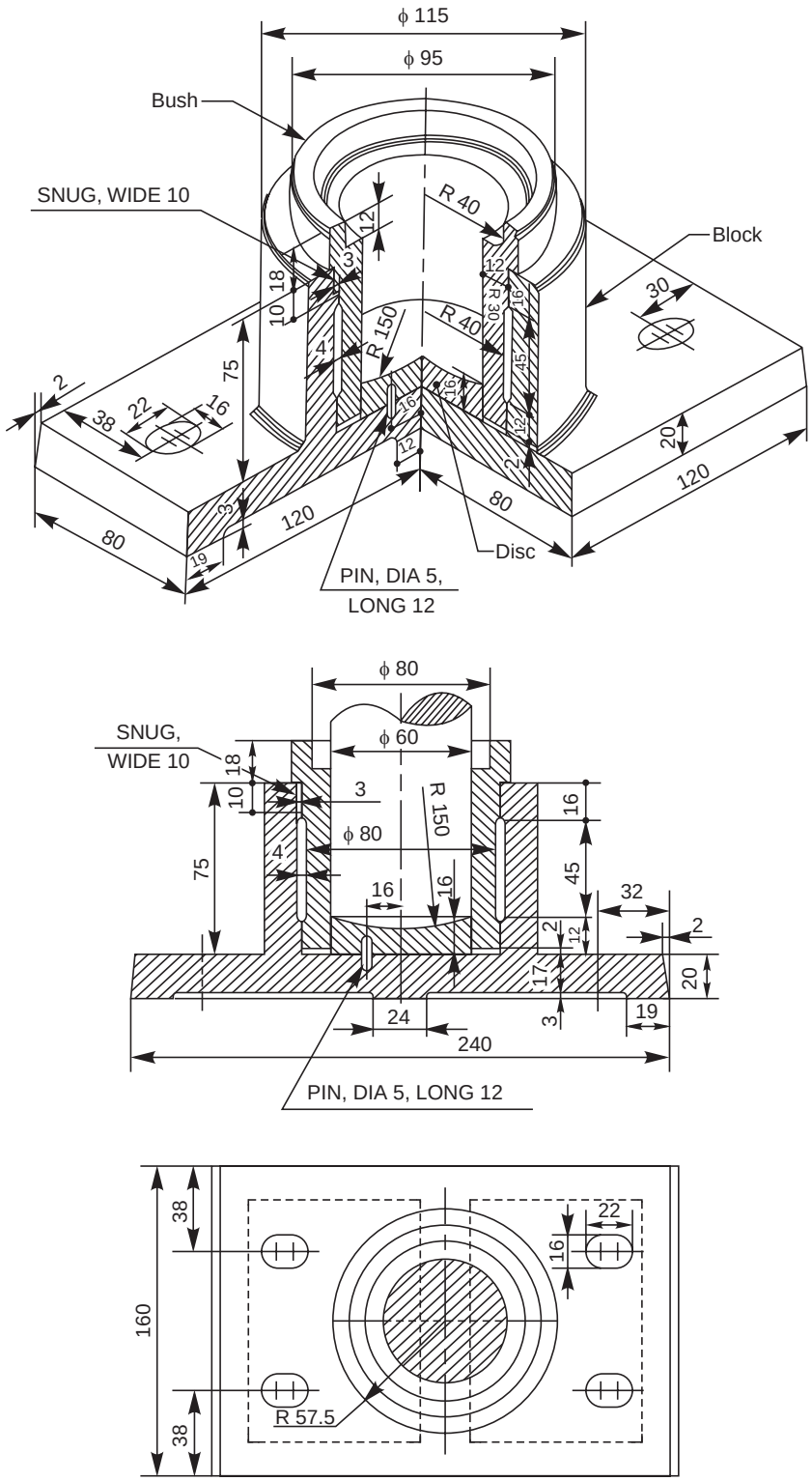

Fig. 12.9 Foot-step bearing

www.EngineeringBooksPdf.com

The disc is prevented from rotation by a pin inserted through the body and away from the centre. The bush is also prevented from rotation by a snug, provided at its neck, below the collar (Fig. 12.9). The space between the shaft and the collar, serves as an oil cup for lubricating the bearing. The bush and the body are recessed to reduce the amount of machining. The base of the body is also recessed to serve the same purpose.

Collar thrust bearing

This is generally used for supporting a horizontal shaft under axial load. Further, in this, the shaft extends through and beyond the bearing. The shaft in a collar thrust bearing may consists of one or more collars which are either fitted to or integral with the shaft (Fig. 12.10). The collars rotate against the stationary split bearing surfaces.

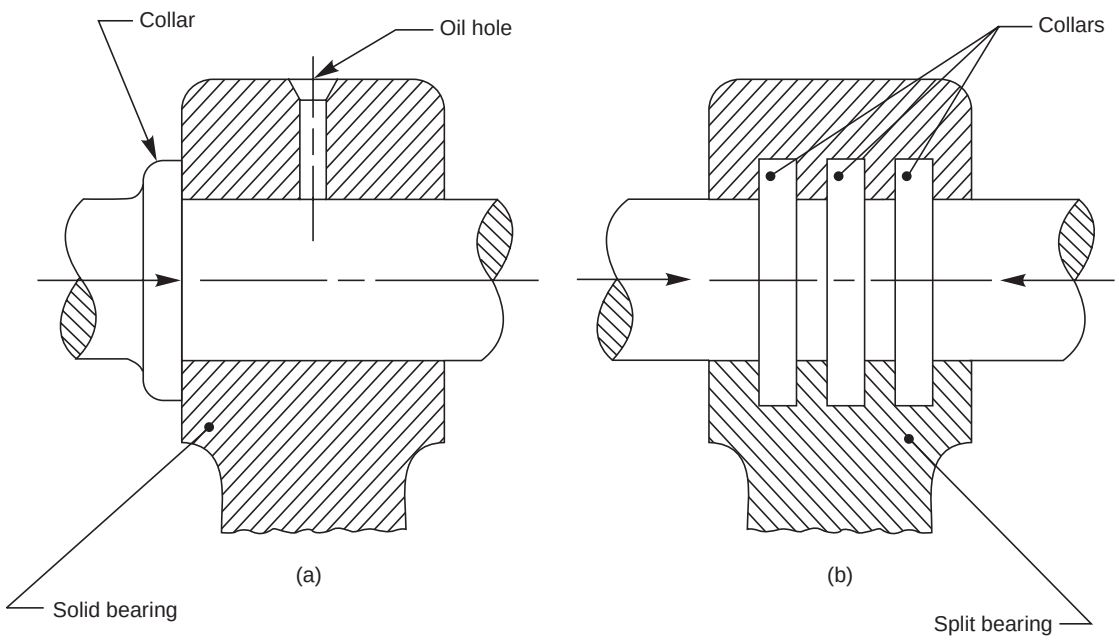

Fig. 12.10 (*a*) Single collar bearing, (*b*) Multi-collar bearing

12.3 ROLLING CONTACT (ANTI-FRICTON) BEARINGS

The bearings, in which a rolling friction is present, are known as rolling contact bearings. As rolling friction is very much less than sliding friction, rolling contact bearings are called anti-friction bearings.

The bearing consists of four parts: inner race, outer race, balls or rollers and a cage or retainer (Fig. 12.11). The inner race is fitted tight into the stationary housing. Figure 12.12 shows the mounting of a shaft with a ball bearing. The arrangement also illustrates the method used to prevent the axial movement of the bearing.

www.EngineeringBooksPdf.com

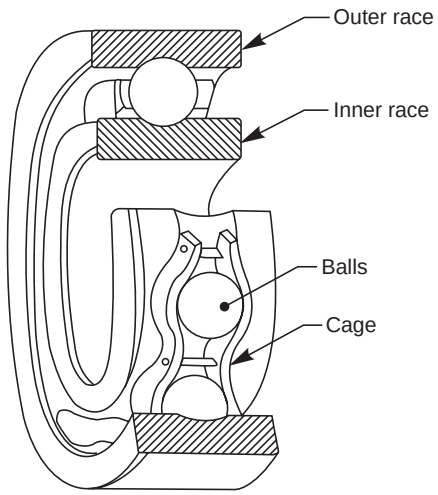

Fig. 12.11 Parts of a ball bearing

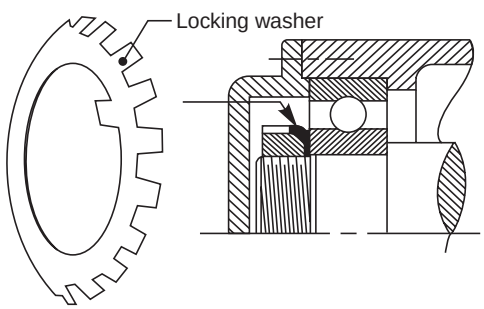

Fig. 12.12 Mounting of a radial ball bearing

Anti-friction bearings are further classified into: radial bearings and thrust bearings.

12.3.1 Radial Bearings

Radial bearings are used to resist normal (radial) loads acting on the shafts. These bearings are sub-divided on the basis of the shape of the rolling elements used, viz., ball bearings, roller bearings and taper roller bearings.

Figure 12.13 shows various types of anti-friction bearings, mounted on a common shaft. From the figure, it may be seen that a single row radial bearing is shown in three different sizes or series, viz., light, medium and heavy. The selection of a particular size depends upon the magnitude of the load acting on the bearing. Sometimes, double row ball bearings are used instead of single row ball bearings, to resist heavy loads.

Manufacturer's use a numbering system to denote the type of series (sizes) of the bearings. For example 2xx, 3xx, 4xx series correspond to light, medium and heavy series respectively. The last two digits when multiplied by 5, gives the bore or shaft size in millimetres. Thus 308 bearing signifies medium series bearing of 40mm bore. Additional digits if present, may refer to manufacturer's details.

www.EngineeringBooksPdf.com

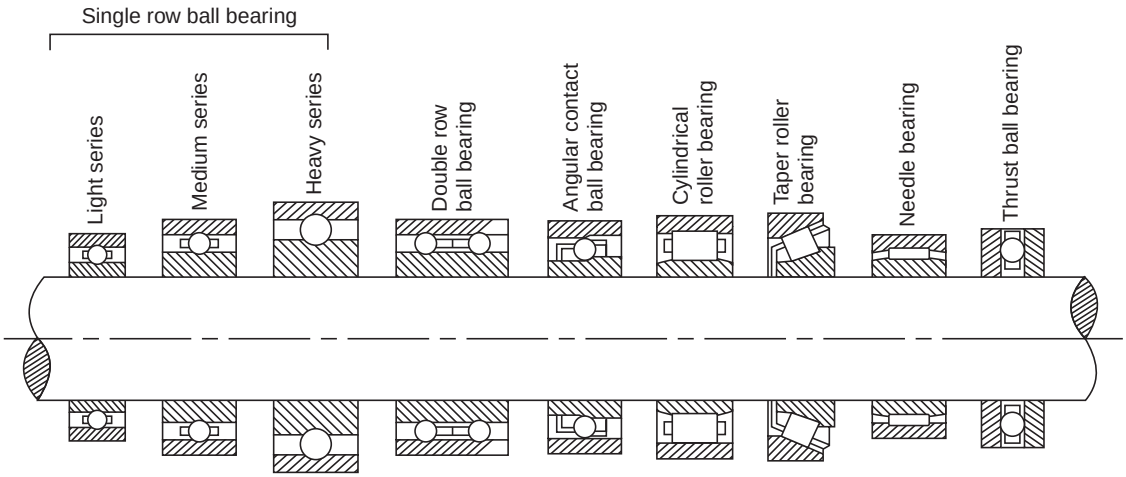

Fig. 12.13 Types of anti-friction bearings

Figure 12.14 illustrates the application of a self-aligning double row ball bearing in a plummer block. Students are advised to refer manufacturer's catalogues to know the various types and sizes, including their load carrying capacities.

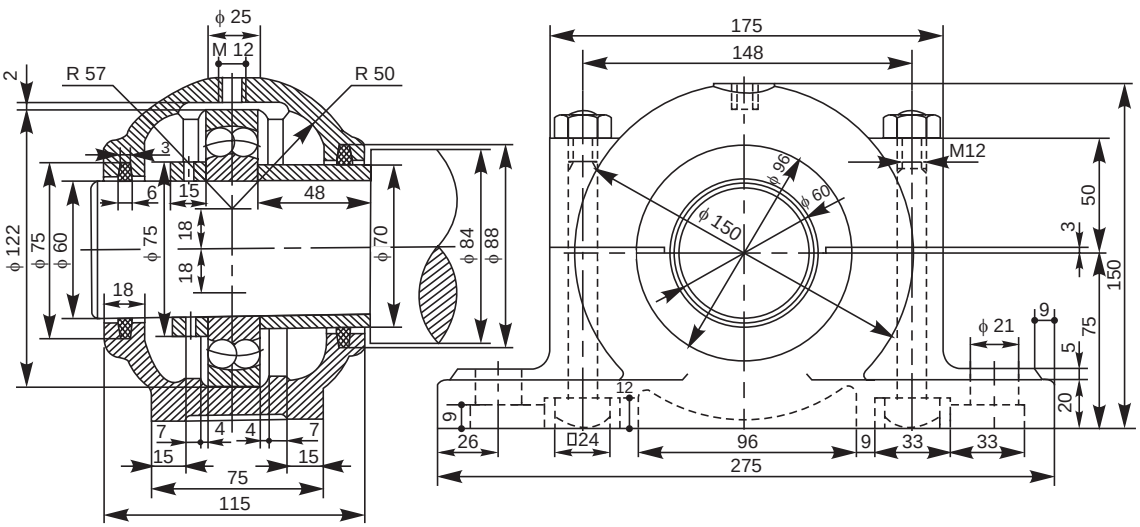

Fig. 12.14 Plummer block with double row self-aligning ball bearing

12.3.2 Thrust Bearings

These bearings are used to support shafts subjected to axial loads. In general,balls as rolling elements are used in these bearings and rollers only in special cases.

Figure 12.15 shows the mounting of a shaft with a thrust ball bearing.

Figure 12.16 illustrates a foot-step bearing with a thrust ball bearing to resist axial loads and a radial ball bearing to position the vertical shaft and also to resist the possible radial loads.

Figure 12.17 shows the application of taper roller bearing, thrust ball bearing and a double row ball bearing in a revolving centre.

www.EngineeringBooksPdf.com

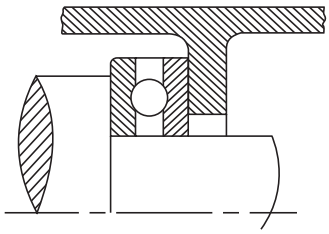

Fig. 12.15 Mounting of a thrust ball bearing

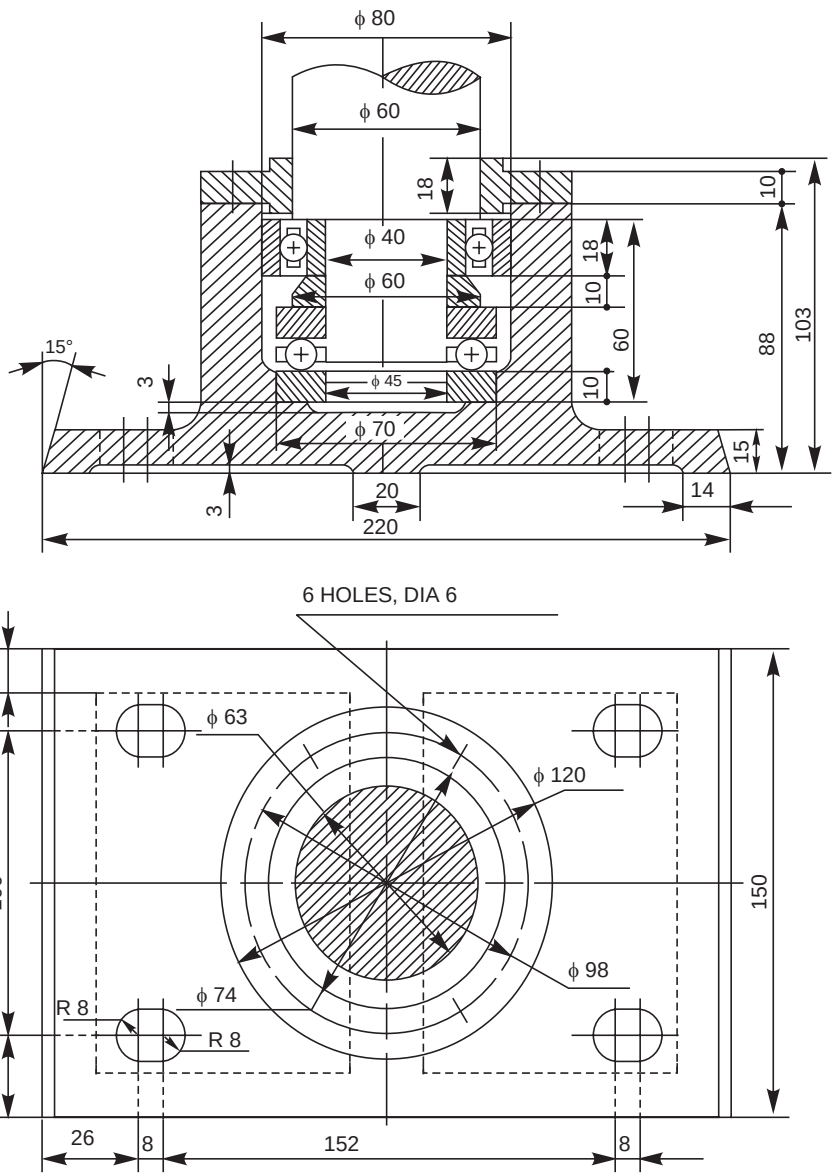

Fig. 12.16 Foot-step bearing with radial and thrust ball bearings

www.EngineeringBooksPdf.com

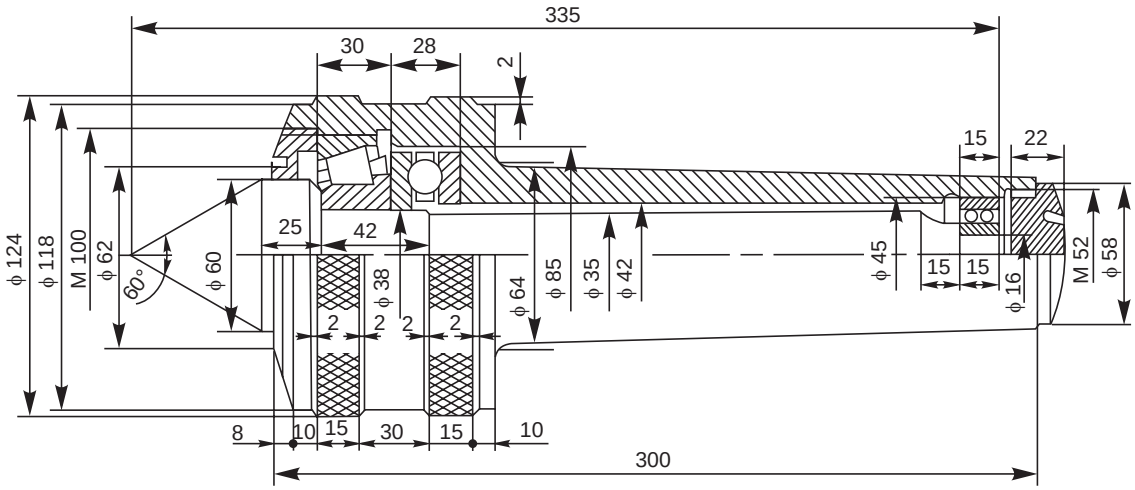

Fig. 12.17 Revolving center

THEORY QUESTIONS

12.1 What is a bearing and what is meant by journal?
12.2 How are bearings classified?
12.3 Name the different forms of journal bearings.
12.4 Under what conditions, a pedastal bearing is preferred?
12.5 Name the various parts of a plummer block.
12.6 How the bolts are prevented from rotation in a plummer block?
12.7 What are the commonly used bearing materials?
12.8 Why collars are provided at the sides of bearings brasses?
12.9 What is a snug? What is the function of it in the bearing?
12.10 Why countersunk hole is provided at the top of the body of the bearing?
12.11 Why elongated holes are generally provided in the base of a bearing?
12.12 Why is the base of the bearing generally kept hollow at the bottom?
12.13 Why a disc is provided at the shaft end in a pivot bearing?
12.14 Distinguish between:
(*a*) sliding contact bearings and anti-friction bearings,
(*b*) bracket and hanger bearings,
(*c*) pivot bearing and collar bearing, and
(*d*) journal bearing and thrust bearing.
12.15 What is a rolling contact bearing?
12.16 Why are rolling contact bearings called anti-friction bearings?
12.17 What are the different shapes of the rolling elements used in anti-friction bearings?
12.18 Explain the specification of a bearing 205.

DRAWING EXERCISES

12.1 Draw (*a*) half sectional view from the front, with left half in section and (*b*) view from above of a bushed bearing, suitable for supporting a shaft of diameter 25mm.

www.EngineeringBooksPdf.com

12.2 Draw the following views of a plummer block, suitable for supporting a shaft of diameter 50mm:
(*a*) half sectional view from the front, with left half in section,
(*b*) sectional view from the side, and
(*c*) view from above.

12.3 Sketch any two designs used to prevent rotational movement of the bearing brasses.

12.4 Sketch the necessary views of a foot-step bearing, for supporting a shaft of diameter 50mm. Give all important proportionate dimensions.

12.5 Indicating proportionate dimensions, sketch the necessary views of the following types of bearings:
(*a*) wall bracket with a pedastal bearing,
(*b*) pillar bracket with a pedastal bearing, and
(*c*) J-hanger with a pedastal bearing.

12.6 Sketch a ball bearing and indicate the various parts of it.

12.7 Illustrate through sketches, the mountings of (*a*) radial ball bearing and (*b*) thrust ball bearing.

12.8 Sketch the sectional views of the following:
(*a*) single row ball bearing, (*b*) cylindrical roller bearing,
(*c*) taper roller bearing and (*d*) thrust ball bearing.

12.9 Draw (*a*) view from the front and (*b*) sectional view from the side of a plummer block with double row self-aligning ball bearing, suitable for supporting a shaft of diameter 30mm.

12.10 Draw (*a*) sectional view from the front and (*b*) view from above of a foot-step bearing with radial and thrust ball bearings, suitable for supporting a shaft of diameter 60mm.

12.11 Indicating proportionate dimensions, sketch half sectional view from the front of a revolving centre, using thrust ball bearing, taper roller bearing and a double row ball bearing.

www.EngineeringBooksPdf.com

CHAINS AND GEARS

13

13.1 INTRODUCTION

Chain drive consists of an endless chain whose links mesh with toothed wheels known as sprockets. Shafts centre distances for chain drives are relatively un-restricted. Chains are easily installed. Chain drives do not slip or creep. As a result, chains maintain a positive speed ratio and are more efficient because of no slippage. Chain drives are more compact than belt drives. For a given capacity, a chain will be narrower and sprockets will be smaller in diameter, thus occupying less overall space. Chains do not deteriorate with age and can operate at higher temperatures. They are more practical for low speeds.

13.2 CHAIN DRIVES

Power transmission chains have two basic components, link plates and pin and bushing joints. The chain articulates at each joint to operate around a toothed sprocket. The pitch of the chain is the distance between the centres of the articulating joints.

13.3 ROLLER CHAINS

These chains are assembled from roller links and pin links (Fig. 13.1). For joint wear life, these chains should be lubricated. The dimensional details of a few selected roller chains are given in Table 13.1, as per the BIS.

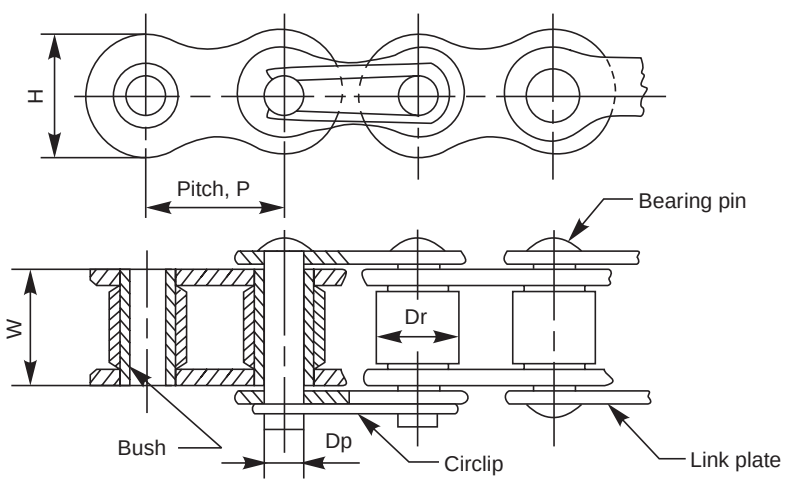

Fig. 13.1 Roller chain

www.EngineeringBooksPdf.com

Table 13.1 Roller chain dimensions. Dimensions are in mm

Designation BIS	*Pitch*	*Roller dia, D_r*	*Pin dia, D_p*	*Width W*	*Plate depth, H*
05 B	8.0	5.0	2.3	3.1	7.04
06 B	9.525	6.35	3.31	5.9	8.14
08 B	12.7	8.31	4.45	7.85	11.69
10 B	15.875	10.16	5.08	9.85	14.26
12 B	19.05	12.07	5.72	11.7	15.95
16 B	25.4	15.88	8.27	17.1	20.8

13.4 INVERTED TOOTH OR SILENT CHAINS

These are high speed chains used for prime movers, power cranes, machine tools and pumps. These chains are made-up of a series of toothed links assembled with pins in such a way that the joint articulates between adjoining pitches (Fig. 13.2).

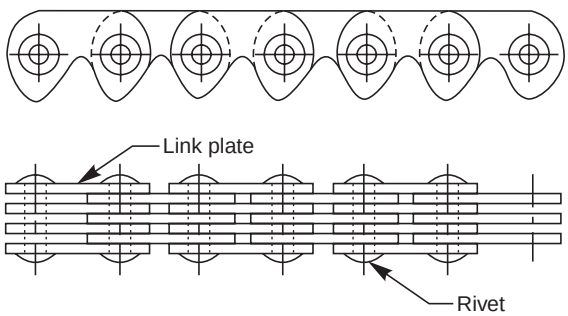

Fig. 13.2 Silent chain

13.5 SPROCKETS

These are used for mounting on flanges, hubs or other devices (Fig. 13.3). Although the sprockets are normally machined from grey iron castings, they are also available in cast steel or welded construction. Smaller sprockets, known as pinions are of plate type; larger sprockets, known as wheels, have hub extensions.

13.6 DESIGN OF ROLLER CHAIN DRIVES

The design of roller chain drive consists of the selection of the chain and sprocket sizes. It also includes the determination of the chain length and centre distance. The limiting factor of chain drive is based on revolutions per minute of the pinion sprocket. Multiple width roller chains transmit greater power at higher speeds. They also substantially reduce noice factor because of their smooth action.

It is a general practice to use a minimum size of sprocket of 17 teeth in order to obtain smooth operation at high speeds. The normal maximum number of teeth is 120. The practice indicates that the ratio of driver to driven sprockets should not be more than 6. Centre distances must be more than one half of the diameter of the smaller sprocket plus one half of the diameter of the larger sprocket. Eighty times pitch is considered the maximum.

The chain length is a function of number of teeth in both sprockets and of centre distance. In addition, the chain must consists of integer number of pitches; preferably with an even number.

www.EngineeringBooksPdf.com

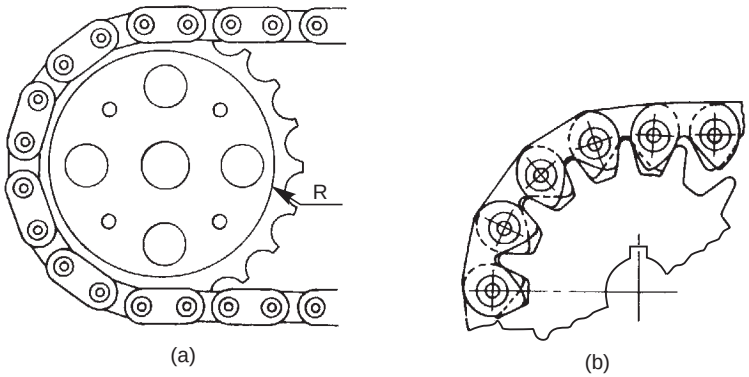

Fig. 13.3 Sprockets

13.7 GEARS

Gears are machine elements, which are used for power transmission between shafts, separated by small distance. Irrespective of the type, each gear is provided with projections called teeth and intermediate depressions called tooth spaces. While two gears are meshing, the teeth of one gear enter the spaces of the other. Thus, the drive is positive and when one gear rotates, the other also rotates; transmitting power from one shaft to the other.

13.8 TYPES OF GEARS

Gears are classified on the basis of the shape of the tooth profile and the relative position of the shafts between which, power transmission takes place. The pictorial views of some of the most commonly used gear trains, are shown in Fig. 13.4.

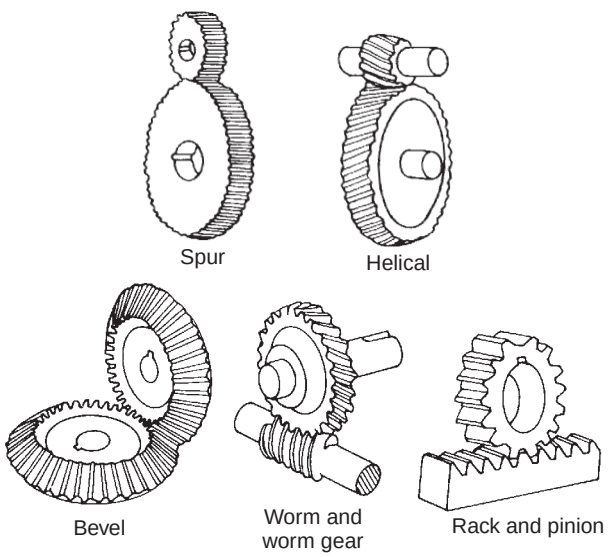

Fig. 13.4 Types of gears

13.9 GEAR NOMENCLATURE

Figure 13.5*a* shows the parts of a spur gear and Fig. 13.5*b,* two spur gears in mesh; indicating all the terms associated with the gearing. These terms are also applicable to all types of gears.

www.EngineeringBooksPdf.com

13.10 TOOTH PROFILES

A number of curves may be used for the tooth profile. However, from a commercial stand point, cycloidal and involute curves are used. Of these two, involute form is extensively used because of its advantages from manufacturing and operational points of view.

13.10.1 Involute Tooth Profile

Involute is a curve traced by a point on a straight line when it rolls without slipping, on the circumference of a circle. Figure 13.6 shows the stages in drawing the involute tooth of a gear. The following are the steps involved in the construction.

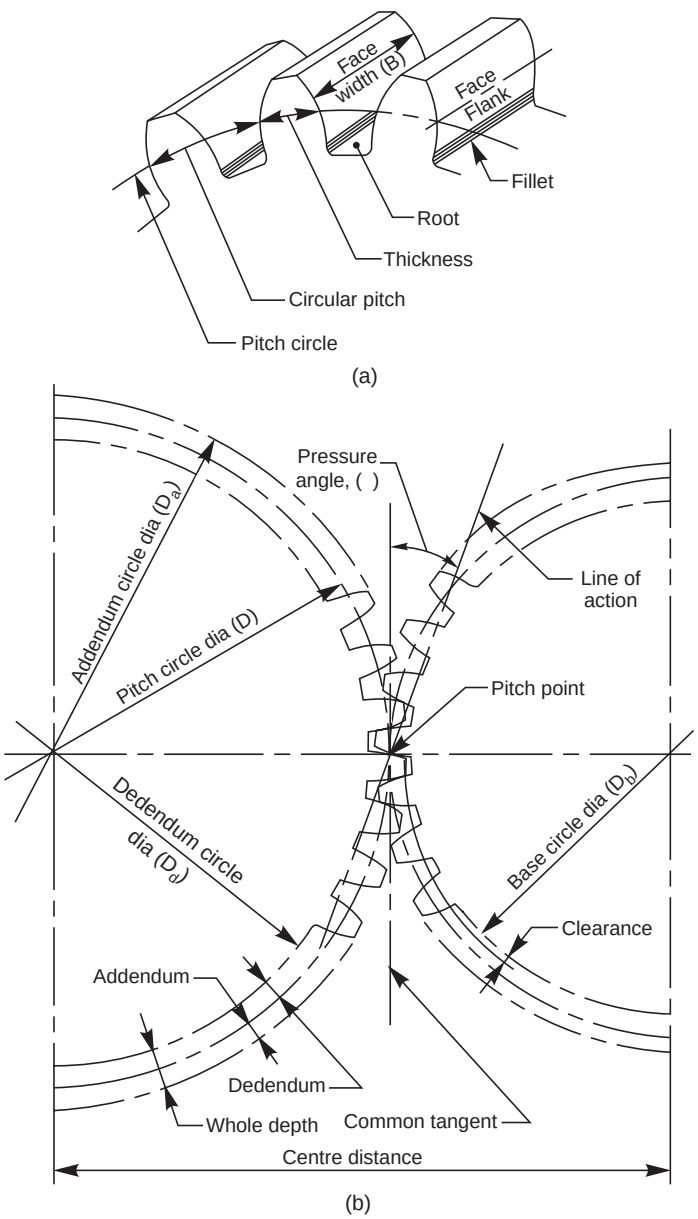

Fig.13.5 Gear nomenclature

www.EngineeringBooksPdf.com

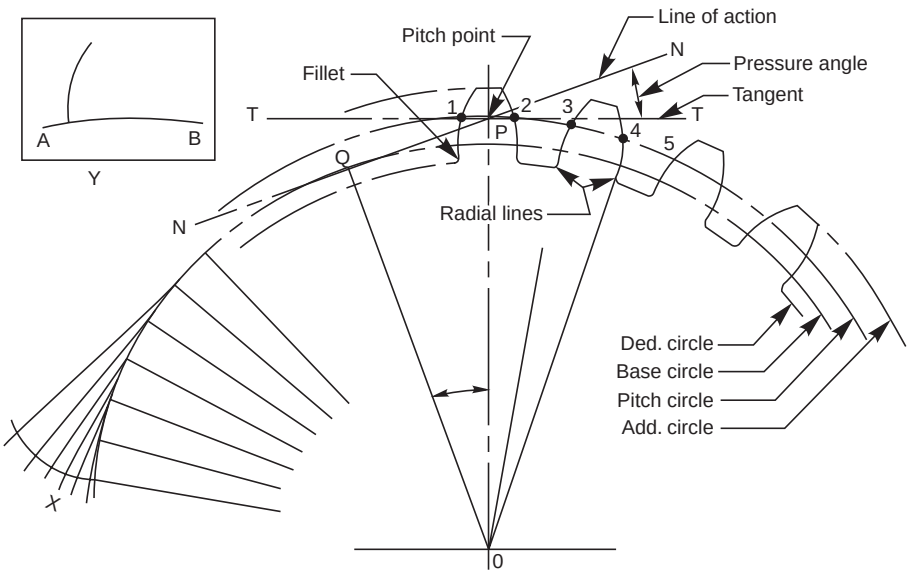

Fig. 13.6 Method of drawing involute tooth profile

1. With O as centre and radius equal to the pitch circle radius, draw an arc.
2. At any point P on it, drawn a line T-T, tangential to the above arc.
3. Through the point P, draw the line of action N-N, making an angle equal to the pressure angle ϕ, with the tangent line T-T.
4. From the centre O, draw the line OQ, perpendicular to the line of action (it will make an angle ϕ with OP).
5. With O as centre and radius equal to OQ, draw an arc, representing the base circle.
6. With O as centre, draw arcs, representing addendum and dedendum circles.
7. Starting from any point on the base circle, construct an involute curve, as shown at X.
8. Trace the curve and a part of the base circle, on a piece of tracing paper, as shown at Y.
9. On the pitch circle, mark points 1, 2, 3, 4, etc., separated by a distance equal to half of the circular pitch.
10. Place the tracing paper, such that the arc AB coincides with the base circle and the curve passes through the point 1.
11. Prick a few points on the curve, lying between the addendum and base circles.
12. Join these points by a smooth curve.
13. Draw a radial line below the base circle and join it with the bottom land, by means of fillet of radius ***r***, which may be taken as 0.125 p_c.
14. Reverse the tracing paper, follow the steps 11 to 13 and complete the curve through the point 2; obtaining one tooth profile.
15. Repeat the steps 11 to 14 and construct the other tooth profiles.

13.10.2 Approximate Construction of Tooth Profiles

Often it is necessary to draw the teeth on a pair of meshing gears, to understand the problems involved in the meshing of the mating teeth. Further, the drawings are not used for producing the teeth in the shop. Hence, approximate constructions may be followed to draw the tooth profiles. The following are the steps involved in the construction:

www.EngineeringBooksPdf.com

Case 1 Number of teeth is 30 and above (Fig.13.7)

1. With O as centre, draw arcs representing dedendum, pitch and addendum circles.
2. At any point on the pitch circle, mark a point P.
3. With OP as diameter, draw a semi-circle.
4. With centre P and radius equal to 0.125× pitch circle diameter (D), draw an arc, intersecting the semi-circle at Q.
5. With O as centre and radius OQ, draw an arc. The centres of arcs for the tooth profiles, lie on this arc and the radius for the arc is 0.125D.
6. On the pitch circle, mark points 1, 2, 3, 4, etc., separated by a distance equal to half the circular pitch.

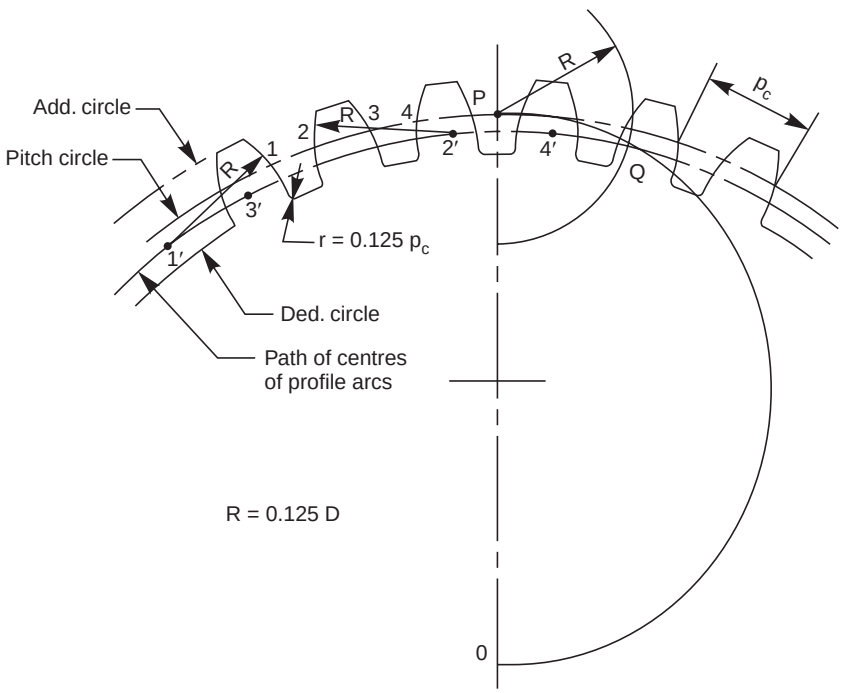

Fig. 13.7 Approximate construction of tooth profile (number of teeth 30 and above)

7. With each of these points as centres, and radius equal to 0.125D, locate the centres 1′, 2′, 3′, 4′, etc., for arcs, on the circle for centres (passing through Q).
8. With 1′, 2′, 3′, 4′, etc., as centres and radius equal to R, draw arcs, passing through the points 1, 2, 3, 4, etc.
9. Add the top lands and join the arcs with the bottom land, by a fillet of radius ***r***, equal to 0.125 p_c.

Case 2 Number of teeth is less than 30 (Fig. 13.8)

1. Follow the steps 1 to 8 as described above.
2. From O, draw lines, tangential to the above arcs.
3. Add the top lands and join the above lines with the bottom land, by a fillet of radius equal to 0.125 p_c.

www.EngineeringBooksPdf.com

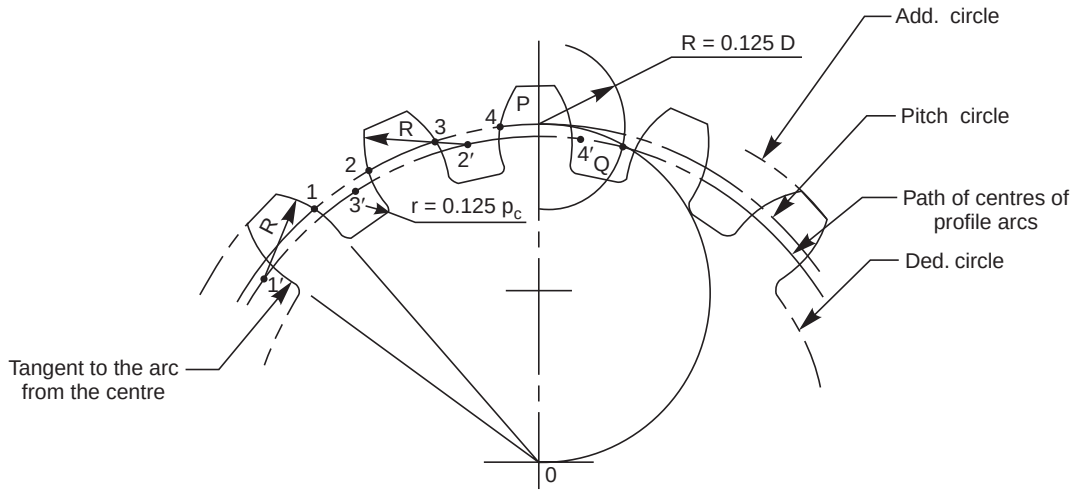

Fig. 13.8 Approximate construction of tooth profile (number of teeth less than 30)

13.11 GEARS AND GEARING

13.11.1 Spur Gear

Gears with pitch circle diameters less than 10cms are produced from solid blanks, with uniform thickness. When pitch circle diameters lie between 10 to 25 cms, gears are produced with a web connecting the hub and rim. The web thickness (T_w) may be taken as equal to the circular pitch of the gear. Still larger gears are produced with arms; the number being dependent upon the pitch circle diameter. The rim thickness T_r, *i.e.*, the thickness of the metal under the teeth may be taken as equal to the depth of the tooth. Figure 13.9 shows the views of a spur gear, following the conventional representation for gear teeth.

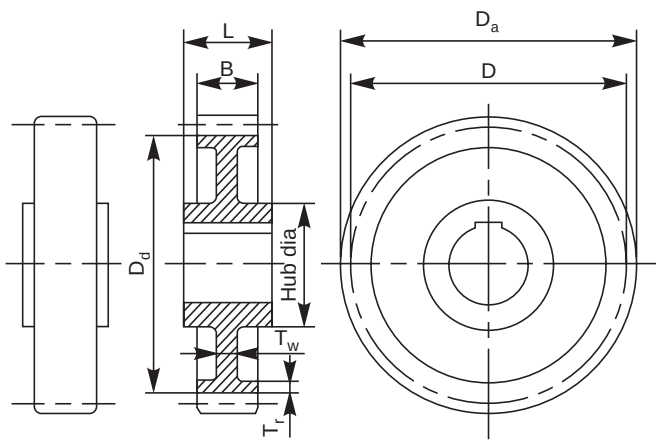

Fig. 13.9 Spur gear

13.11.2 Spur Gearing

Two spur gears in mesh is known as spur gearing. In all gearings except worm gearing, the smaller of the two gears is called the pinion and the larger one, the gear or gear wheel. Figure 13.10 shows the views of spur gearing, indicating the required parameters.

www.EngineeringBooksPdf.com

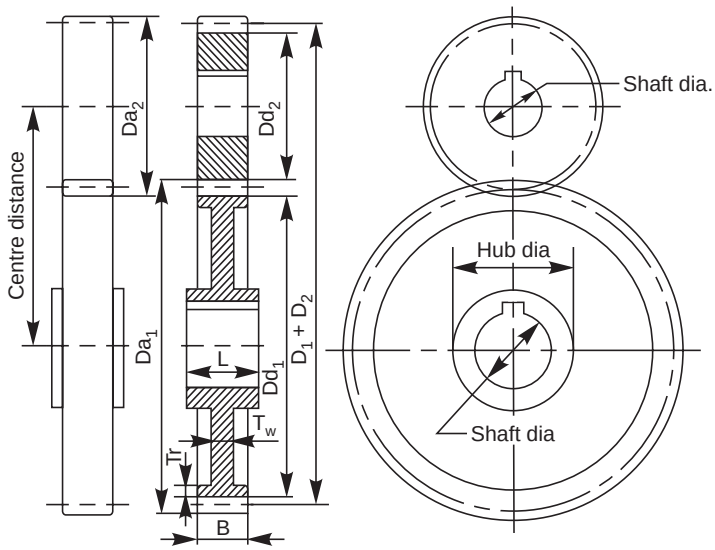

Fig. 13.10 Spur gearing

13.11.3 Helical Gear

Helical gears have teeth inclined to the axis of rotation at an angle, known as helix angle. These are also used to connect parallel shafts. When helical gears are used, the shaft bearings are subjected to thrust loads which may be resisted by using a double helicle gear (herring-bone gear). This is equivalent to two helical gears of opposite hand, mounted side by side on the same shaft. This arrangement, develops opposite thrust reactions and thus cancel each other.

13.11.4 Helical Gearing

Two helical gears in mesh is known as helical gearing. Out of the two gears in mesh, one gear must have a right hand helix and the other, a left hand helix as shown in Fig. 13.11. Helical gearing is noiseless in operation because of the more gradual engagement of the teeth during meshing.

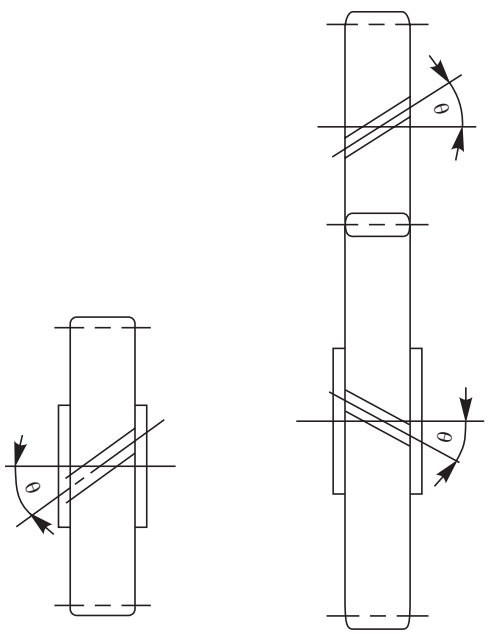

Fig. 13.11 Helical gear and helical gearing

13.11.5 Bevel Gear

In bevel gears, the teeth are formed on conical surfaces and are used for transmitting power between intersecting shafts.

Bevel gears may be classified as straight teeth bevel gears and spiral bevel gears. Hypoid gears are similar to spiral bevel gears, except that the shafts are off-set and non-intersecting. Bevel gears may be used to connect shafts at practically any angle; 90° being the common one. Figure 13.12 shows the views of a bevel gear.

www.EngineeringBooksPdf.com

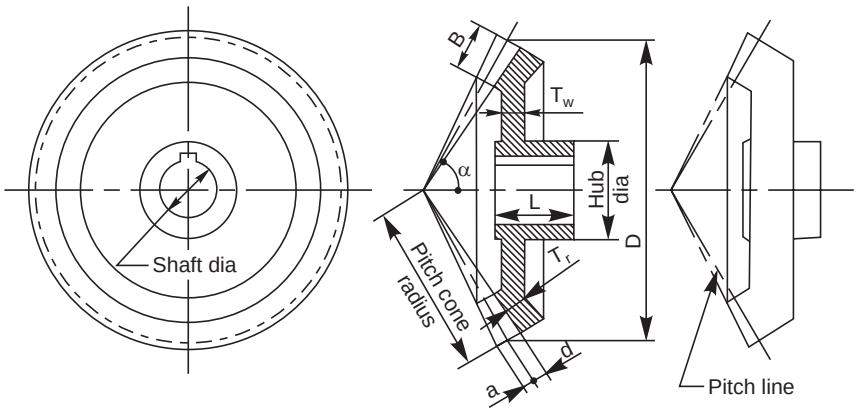

Fig. 13.12 Bevel gear

13.11.6 Bevel Gearing

Two bevel gears in mesh is known as bevel gearing. In bevel gearing, the pitch cone angles of the pinion and gear are to be determined from the shaft angle, *i.e.*, the angle between the intersecting shafts. Figure 13.13 shows two views of a bevel gearing.

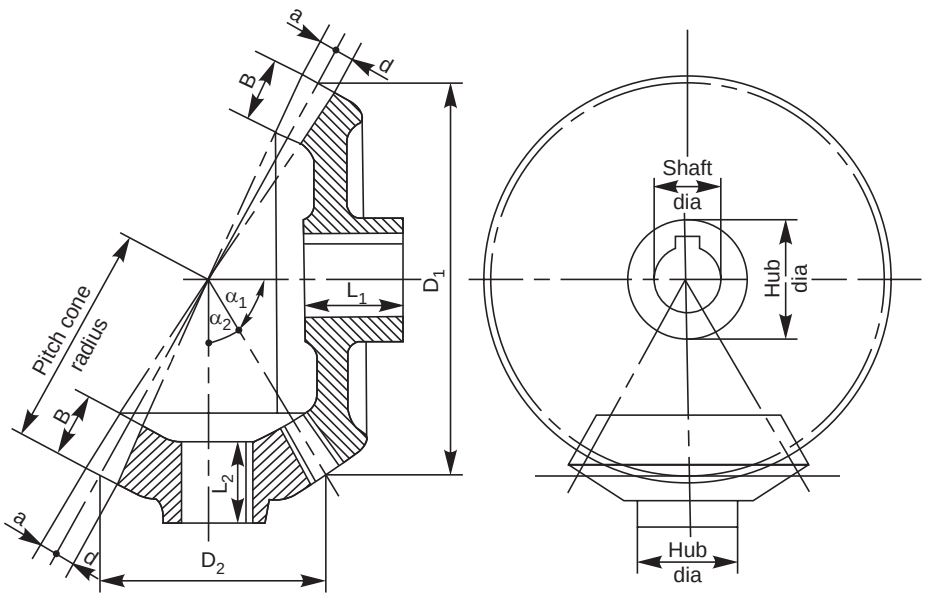

Fig. 13.13 Bevel gearing

13.11.7 Worm and Worm Gear (Wheel)

Worm and worm gear in combination, *i.e.*, in meshing is known as worm gearing and is used in speed reducers requiring large reductions. In worm gearing, the driving member is the worm, which is in the form of a screw, having trapezoidal thread. The worm may have single or multiple start threads which are left or right hand in nature. The driven member is known as the worm gear or worm wheel. In one of the designs, the worm gear is in the form of a helical gear, with teeth cut on a concave shaped periphery and thus enveloping the worm. Figure 13.14 shows the worm and worm gear indicated separately and Fig. 13.15, the same in mesh.

www.EngineeringBooksPdf.com

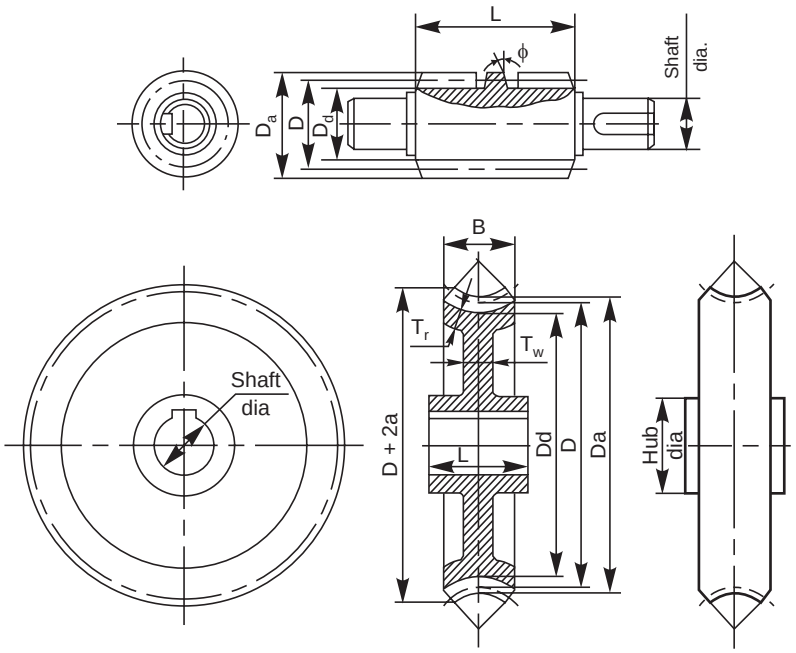

Fig.13.14 Worm and worm gear

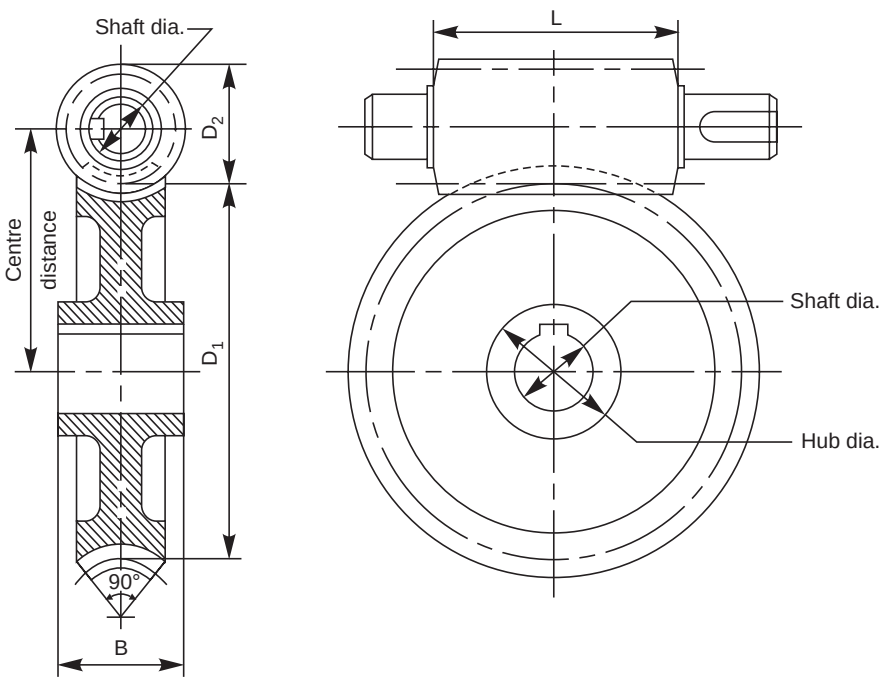

Fig. 13.15 Worm gearing

www.EngineeringBooksPdf.com

THEORY QUESTIONS

13.1 What is a gear and what is its function?

13.2 How are gears classified? Give their applications.

13.3 Define the following terms, as applicable to spur gearing:
(*a*) pitch circle diameter, (*b*) addendum, (c) dedendum,
(*d*) pitch point, and (*e*) pressure angle.

13.4 Why a gear drive is called a positive drive?

13.5 What are the commonly used tooth profiles and which one is the most extensively used?

13.6 Define an involute curve.

13.7 Which will run faster; the larger or smaller of the two meshing gears?

13.8 What is a rack and what is its purpose ?

13.9 What is the difference between a rack and a pinion?

13.10 Distinguish between:
(*a*) spur and helical gear,
(*b*) single helical gear and double helical gear,
(*c*) spur and bevel gear,
(*d*) gear and gearing,
(*e*) pinion and gear wheel, and
(*f*) worm and worm gear.

DRAWING EXERCISES

13.1 A gear has 30 teeth of involute profile, pitch circle diameter of 180mm and pressure angle of 20°. Draw the profile of four complete teeth for the gear. Also, draw the profile by approximate construction method.

13.2 Sketch (*a*) sectional view from the front and (*b*) view from the side of a spur gear with a web.

13.3 Sketch the views of two gears, a pinion and gear in mesh. Indicate the required parameters.

13.4 Sketch a helical gearing, following the conventional representation.

13.5 Sketch a bevel gear, indicating the various terms and parameters.

13.6 Sketch (*a*) sectional view from the front and (*b*) view from the side of a bevel gearing. Indicate the required parameters.

13.7 Through the necessary views, sketch a worm and worm gear separately; indicating the important parameters.

13.8 Sketch the two views of a worm gearing; indicating the necessary parameters.

www.EngineeringBooksPdf.com

JIGS AND FIXTURES

14

14.1 INTRODUCTION

The requirements of mass production and interchangeable assembly in industry, demand that the components be machined to identical form and size. For this purpose, devices known as jigs and fixtures are used for holding, locating the work and guiding the tools while machining. The use of jigs and fixtures makes possible rapid as well as accurate manufacturing; at the same time, reducing the production cost.

A jig is a device, which holds and supports the work and also guides the path of the cutting tool, as the operation is performed. Jigs are used extensively for operations such as drilling, reaming, tapping and counter-boring. The jig need not be secured to the machine.

A fixture is a device which locates and holds the work securely in a definite position. It is usually secured to the table of the machine and it does not guide the cutting tool. The cutting tool is either moved into position for the operation or the table is moved under the cutting tool. Fixtures are used while performing milling, turning, honing, broaching, grinding and welding operations.

14.2 PRESENTATION OF WORK PIECE

The drawing of a jig or fixture includes a work piece in position. However, the work piece should be easily discernible from the jig/fixture. To accomplish this, the work piece is drawn in a chain dotted line, preferably in colour which will be easily distinguished.

The work piece in a fixture/jig drawing is considered transparent. As a result, locators, studs or other parts of fixture/jig passing through the work piece are drawn in full lines instead of dotted, as shown in Fig. 14.1. Similarly, the parts of the fixture/jig placed behind the work piece are also drawn.

The work piece is drawn mainly to facilitate design of the jig/fixture. The designer can thus position the locators, clamps and bushes quickly and correctly with respect to the work piece. It also facilitates tool room and manufacturing engineers to read the jig/fixture drawing and easily understand the functions and requirements of each part.

14.3 JIG COMPONENTS

14.3.1 Jig body

The jig body is a frame which holds various parts of a jig. It may be a single integral part of welded construction or an assembled one. The body must be rigid in construction and at the same time light in weight for easy handing.

www.EngineeringBooksPdf.com

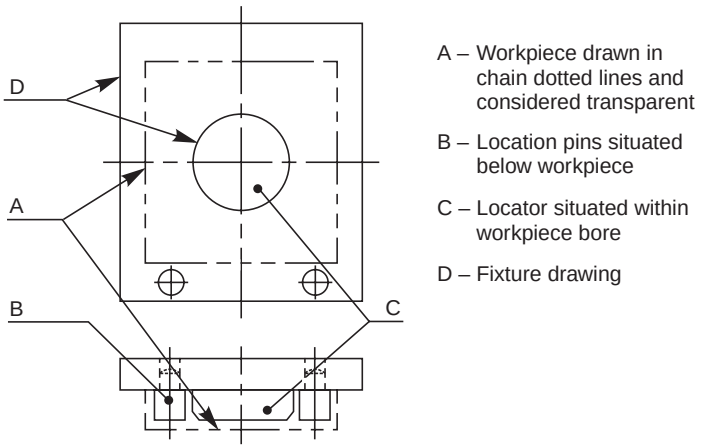

Fig.14.1 Presentation of workpiece

14.3.2 Locating Devices

The location should prevent linear and rotary motion of the work piece, along and around three major axes X, Y, and Z. Depending upon the shape of the work piece, the locating devices may be either internal or external in nature. Cylindrical, diamond and conical pin locators are the common internal locators; V-grooves, button stops, supports and dowel pins are used as external locators. Location system should prevent wrong loading of the work piece in a fool proof manner.

14.3.3 Clamping Devices

Clamping elements hold the work piece firmly engaged with locating elements during the operation. The clamping system should be strong enough to withstand forces developed during the operation and at the same time it should not dent or damage the work piece. Speed of operation and operator fatigue also are important in selecting the clamping devices.

Clamps are broadly divided based on their construction and principle of operation as: screw clamps, strap clamps, pivoted clamps, hinged clamps, swinging clamps, quick action clamps, multiple clamps and power clamps.

14.3.4 Bushings

Drill jigs use bushes to guide drills, reamers and other cutting tools, to the work piece. These are made of carbon steels with 0.85 to 1% carbon and 0.5 to 0.9% manganese, and hardened to RC 60 to 64 to minimize wear due to contact with hard, rotating tools. Bushes are generally finished by grinding inside and outside diameters within 0.01 mm concentricity. The inside diameter is ground to precision running fit (F7) with the drill/reamer to be guided, whereas the outside diameter is made press fit (p 6), precision location fit (h6) or precision running fit (f6) depending upon the function and application of the bush.

14.3.4.1 Press Fit Bush

Of the various types of bushes used, the press fit bushes are the most common type and are pressed (interference fit) in the jig plates (Fig. 14.2*a*). These bushes are used in batch production where the bushes often outlast the life of the jig. Press fit bushes are also used as liners for renewable and slip bushes.

14.3.4.2 Renewable Bushes

For continuous or large batch production, the inside diameter of bush is subjected to severe wear due to continuous contact with the hard cutting tool. The guide bushes require periodic

www.EngineeringBooksPdf.com

replacement. The replacement is simplified by making the outside diameter of the bush, precision location fit (h6). The bush can then be assembled manually without a press. The renewable bush must be prevented from rotation and axial movement. This is accomplished by the provision of a flat surface on the collar (Fig. 14.2*b*). The shoulder screw prevents the bush from getting lifted with the cutting tool.

14.3.4.3 Slip Bushes

When a hole in the work piece requires two operations such as drilling and reaming, it is necessary to use two different guide bushes for different tools. The hole is first drilled using a bush having bore suitable for drill. After drilling, the drill bush is removed and a reaming bush is used to guide the reamer. For mass production, quick change is accomplished by the provision of slip bushes (Fig. 14.2*c*). There are many variations of slip bushes.

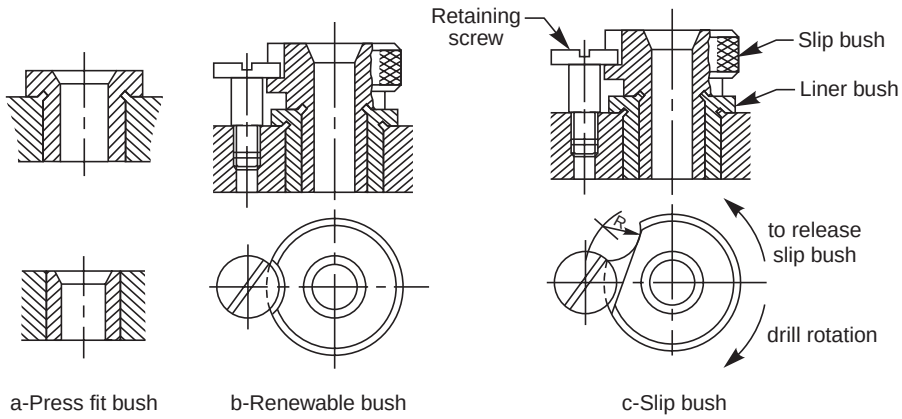

Fig. 14.2 Types of bushes

14.3.4.4 Special Bushes

Some work pieces or operations require unusual types of bushes which may involve simple modification of standard bushes. A twist drill tends to slide down inclines and curves; causing bending and breakage of drill. This problem can be overcome by altering the shape of the drill bush to provide better support and resistance against bending as shown in Fig. 14.3.

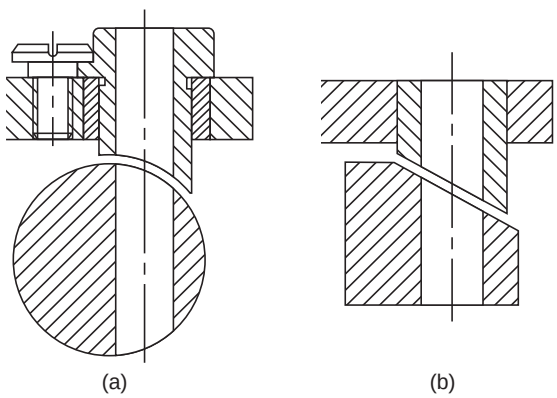

Fig. 14.3 Special bushes

www.EngineeringBooksPdf.com

14.3.4.5 Bush Clearance

After fitting the bush in the jig body, there should be sufficient clearance left between the bush and the work piece to permit the chip flow during the machining operation (Fig. 14.4) and also burr clearance for ductile materials.

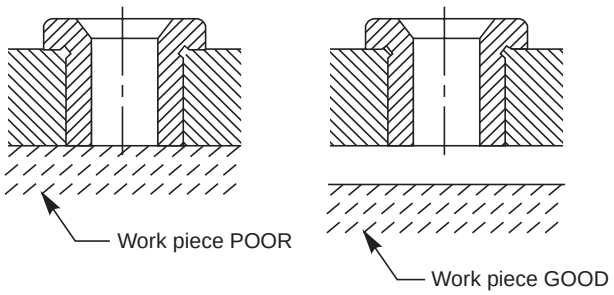

Fig. 14.4 Bush clearance

14.4 VARIOUS TYPES OF JIGS

Depending upon the construction and method of operation; drill jigs can be broadly classified as follows:

1. Plate jigs and channel jigs,
2. Angle plate jigs,
3. Turn over jigs,
4. Leaf or latch jigs,
5. Box jigs, and
6. Trunion type indexing jigs.

14.4.1 Channel Jig

Figure 14.5 shows the assembly drawing of a channel jig with work piece in position.

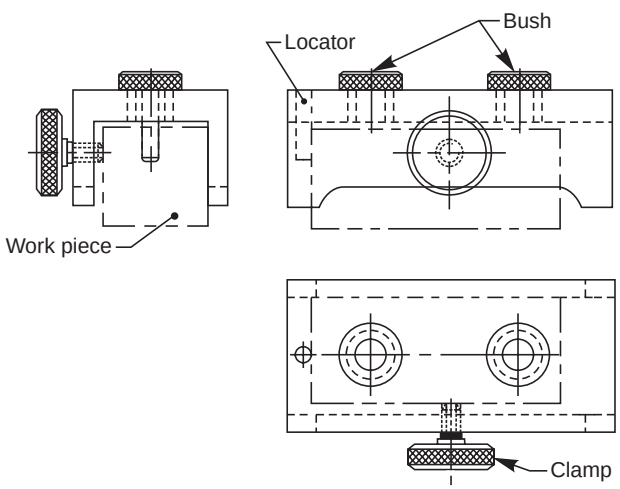

Fig. 14.5 Channel jig

www.EngineeringBooksPdf.com

14.4.2 Box Jig

Figure 14.6 shows the half sectional view from the front and the view from above of the assembled drawing of box jig. This jig is also provided with a latch for clamping and supporting the work piece when used as a turn-over jig. The use of different types of bushes is also indicated in the figure.

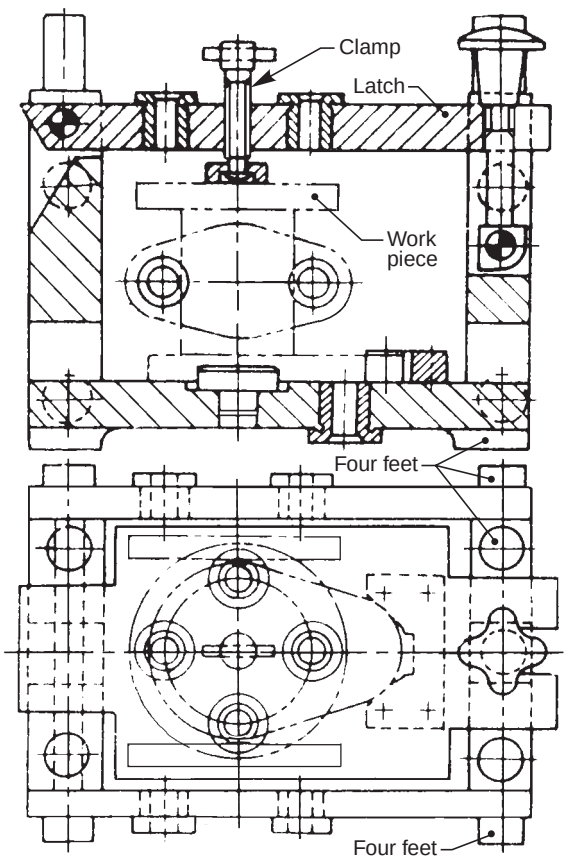

Fig. 14.6 Box jig

14.5. FIXTURE COMPONENTS

14.5.1 Fixture Base

It is used to locate the fixture components and the work piece. It is firmly fastened to the machine table with clamps. In addition, they may be provided with tongues (tenons) that enter table T-slots for aligning the fixture properly with respect to spindle axis.

14.5.2 Clamps

Fixture clamps, apart from clamping the work piece, are required to resist the cutting forces. Hence, they must be sized heavily than the jig clamps and must be properly located.

www.EngineeringBooksPdf.com

14.5.3 Set Blocks

Cutter set blocks are fastened to the fixture body for proper positioning of the cutter/tool (Fig. 14.7). The locating surfaces of the set blocks are off-set from the finished surfaces to be machined. Feeler guages, in thickness equal to the off-set are used on the locating surfaces of the set blocks and then the fixture is adjusted until the cutter touches the feeler guage.

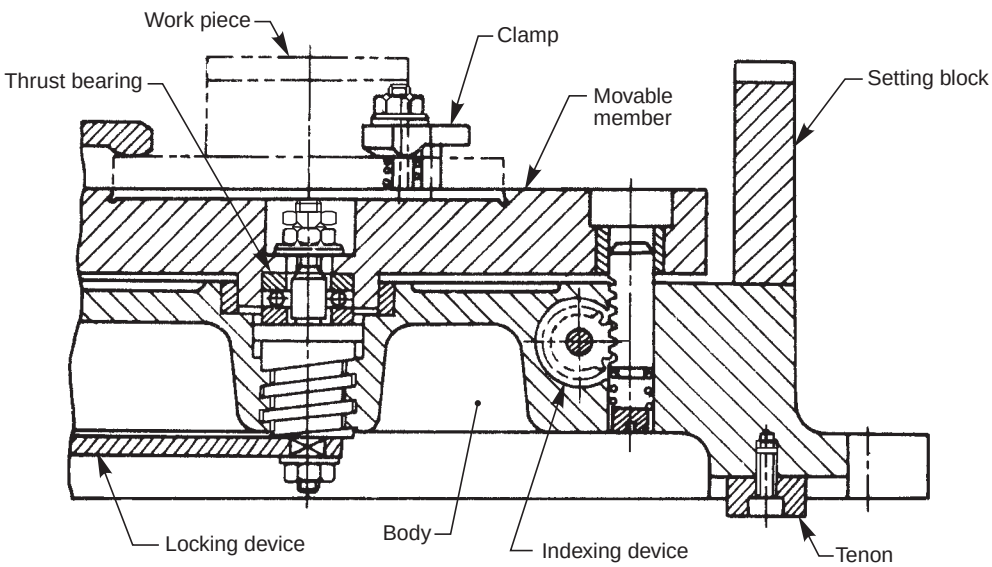

Fig. 14.7 Milling fixture

14.6 TYPES OF FIXTURES

14.6.1 Indexing Type Milling Fixture

Figure 14.7 shows an indexing type milling fixture, consisting of various components. The fixture base is fixed on the milling machine table, and is aligned by means of the tenons fitted to the base. The cutter is set by using a feeler guage and setting block. After making a cut on the work piece, it is indexed for the next slot, using the indexing mechanism.

14.6.2 Turning Fixture

Figure 14.8 shows a turning fixture to drill and finish a bearing block. The base of the fixture is clamped to a face plate/back plate of lathe. To compensate for the unbalanced loading over the lathe spindle, a balance weight is provided on the fixture base.

www.EngineeringBooksPdf.com

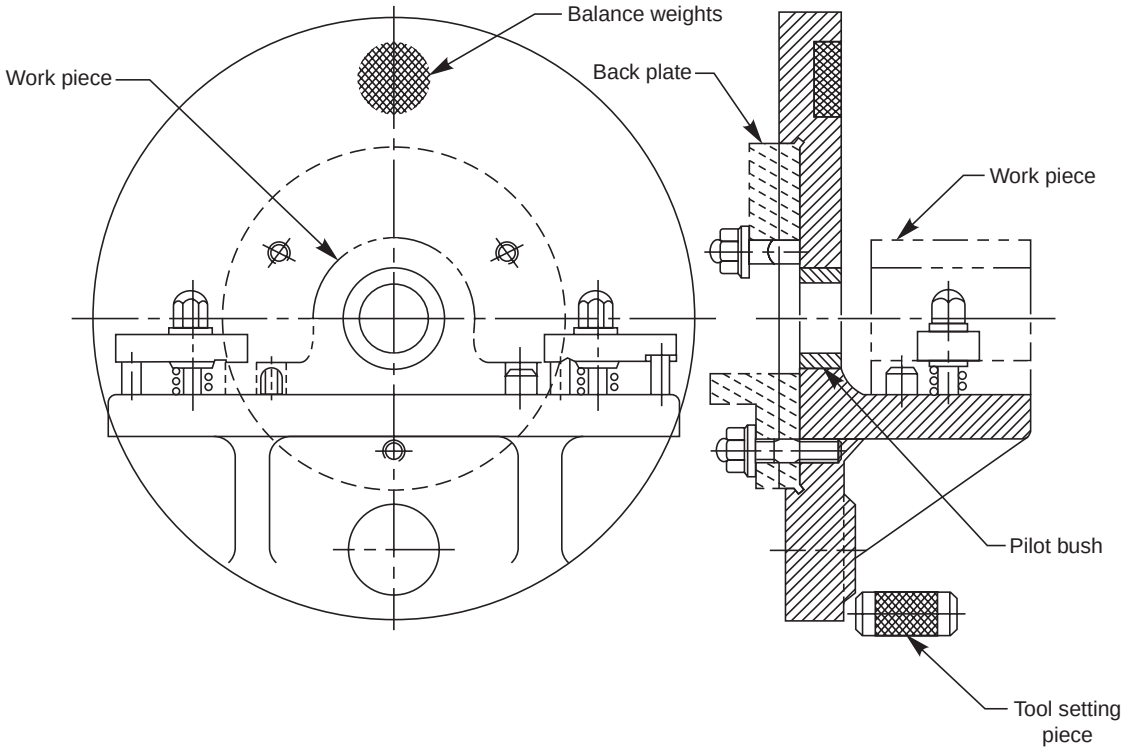

Fig. 14.8 Turning fixture

14.6.3 Welding Fixture

Figure 14.9 shows a welding fixture for a pipe fabrication. The pipe fabrication consists of 3 pipes, 2 channels and 1 gusset channel. The pipes are located and supported by blocks containing semi-circular grooves. They are clamped by strap clamps. The channels and gusset are located and supported by brackets and aligning pins. Later, the welding operation is carried out.

www.EngineeringBooksPdf.com

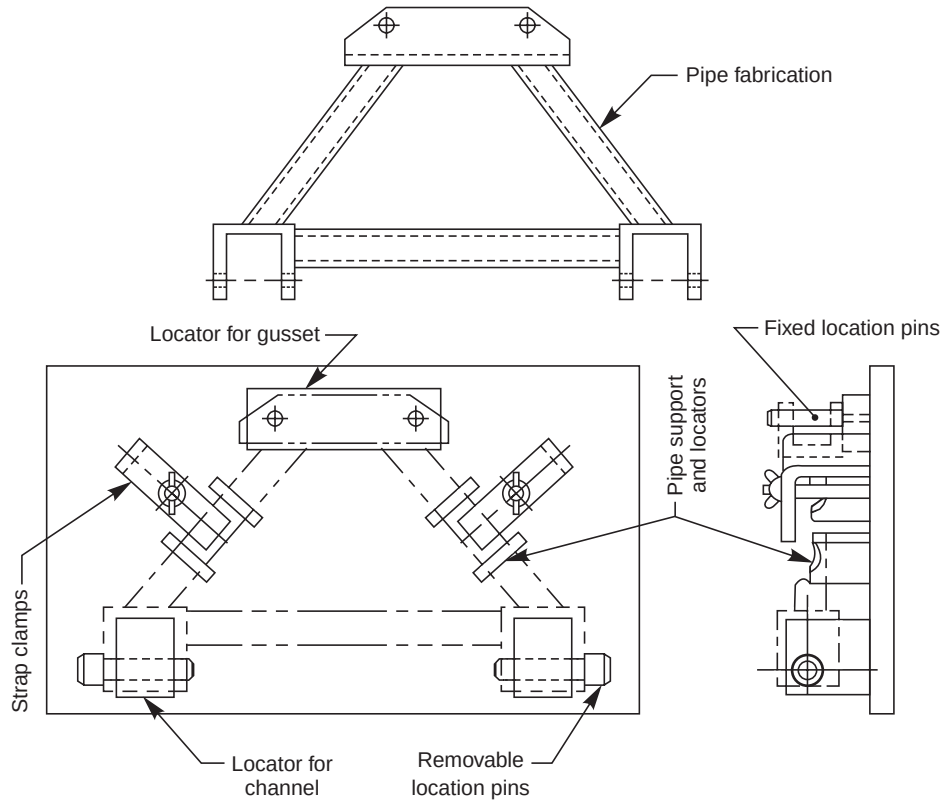

Fig. 14.9 Welding fixture

THEORY QUESTIONS

14.1 What is a jig ?
14.2 What is a fixture ?
14.3 What are the applications of jigs and fixtures ?
14.4 How is the work piece represented in a jig or fixture drawing ?
14.5 List the various jig components and their uses.
14.6 List different types of jigs and sketch the following :
(*a*) turn over jig, and
(*b*) leaf jig.
14.7 With the help of sketches, describe the different types of bushes.
14.8 What is bush clearance and what is its importance ?
14.9 List various fixture components and their uses.
14.10 Name the different types of fixtures.

www.EngineeringBooksPdf.com

LIMITS, TOLERANCES, AND FITS

15

15.1 INTRODUCTION

The manufacture of interchangeable parts require precision. Precision is the degree of accuracy to ensure the functioning of a part as intended. However, experience shows that it is impossible to make parts economically to the exact dimensions. This may be due to,

(*i*) inaccuracies of machines and tools,

(*ii*) inaccuracies in setting the work to the tool, and

(*iii*) error in measurement, etc.

The workman, therefore, has to be given some allowable margin so that he can produce a part, the dimensions of which will lie between two acceptable limits, a maximum and a minimum.

The system in which a variation is accepted is called the limit system and the allowable deviations are called tolerances. The relationships between the mating parts are called fits.

The study of limits, tolerances and fits is a must for technologists involved in production. The same must be reflected on production drawing, for guiding the craftsman on the shop floor.

15.2 LIMIT SYSTEM

Following are some of the terms used in the limit system :

15.2.1 Tolerance

The permissible variation of a size is called tolerance. It is the difference between the maximum and minimum permissible limits of the given size. If the variation is provided on one side of the basic size, it is termed as unilateral tolerance. Similarly, if the variation is provided on both sides of the basic size, it is known as bilateral tolerance.

15.2.2 Limits

The two extreme permissible sizes between which the actual size is contained are called limits. The maximum size is called the upper limit and the minimum size is called the lower limit.

15.2.3 Deviation

It is the algebraic difference between a size (actual, maximum, etc.) and the corresponding basic size.

15.2.4 Actual Deviation

It is the algebraic difference between the actual size and the corresponding basic size.

15.2.5 Upper Deviation

It is the algebraic difference between the maximum limit of the size and the corresponding basic size.

www.EngineeringBooksPdf.com

15.2.6 Lower Deviation

It is the algebraic difference between the minimum limit of the size and the corresponding basic size.

15.2.7 Allowance

It is the dimensional difference between the maximum material limits of the mating parts, intentionally provided to obtain the desired class of fit. If the allowance is positive, it will result in minimum clearance between the mating parts and if the allowance is negative, it will result in maximum interference.

15.2.8 Basic Size

It is determined solely from design calculations. If the strength and stiffness requirements need a 50mm diameter shaft, then 50mm is the basic shaft size. If it has to fit into a hole, then 50 mm is the basic size of the hole. Figure 15.1 illustrates the basic size, deviations and tolerances.

Here, the two limit dimensions of the shaft are deviating in the negative direction with respect to the basic size and those of the hole in the positive direction. The line corresponding to the basic size is called the zero line or line of zero deviation.

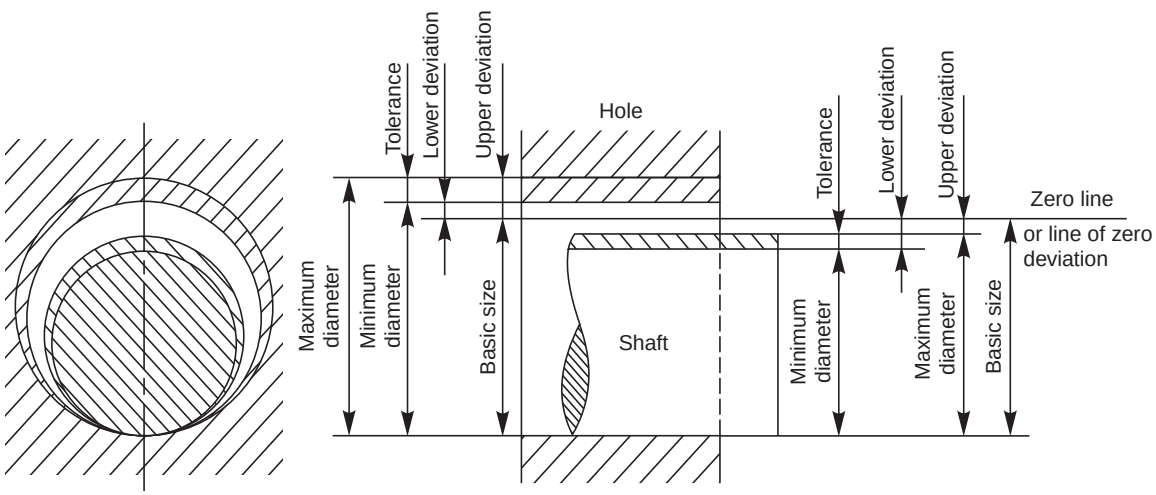

Fig. 15.1 Diagram illustrating basic size deviations and tolerances

15.2.9 Design Size

It is that size, from which the limits of size are derived by the application of tolerances. If there is no allowance, the design size is the same as the basic size. If an allowance of 0.05 mm for clearance is applied, say to a shaft of 50 mm diameter, then its design size is (50 – 0.05) = 49.95 mm. A tolerance is then applied to this dimension.

15.2.10 Actual Size

It is the size obtained after manufacture.

15.3 TOLERANCES

Great care and judgement must be exercised in deciding the tolerances which may be applied on various dimensions of a component. If tolerances are to be minimum, that is, if the accuracy requirements are severe, the cost of production increases. In fact, the actual specified tolerances dictate the method of manufacture. Hence, maximum possible tolerances must be recommended wherever possible.

www.EngineeringBooksPdf.com

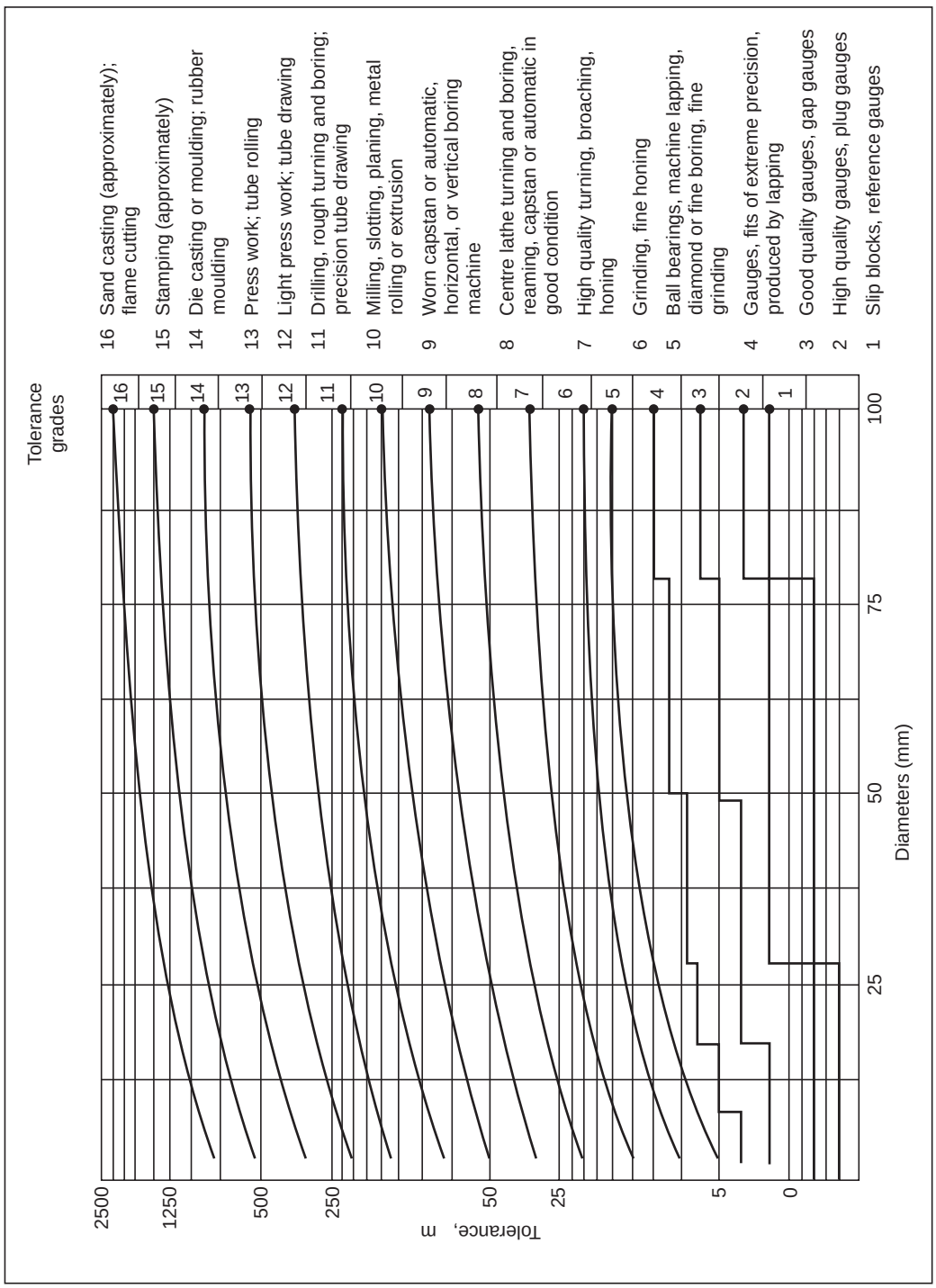

Fig. 15.2 Degree of accuracy expected of manufacturing process

www.EngineeringBooksPdf.com

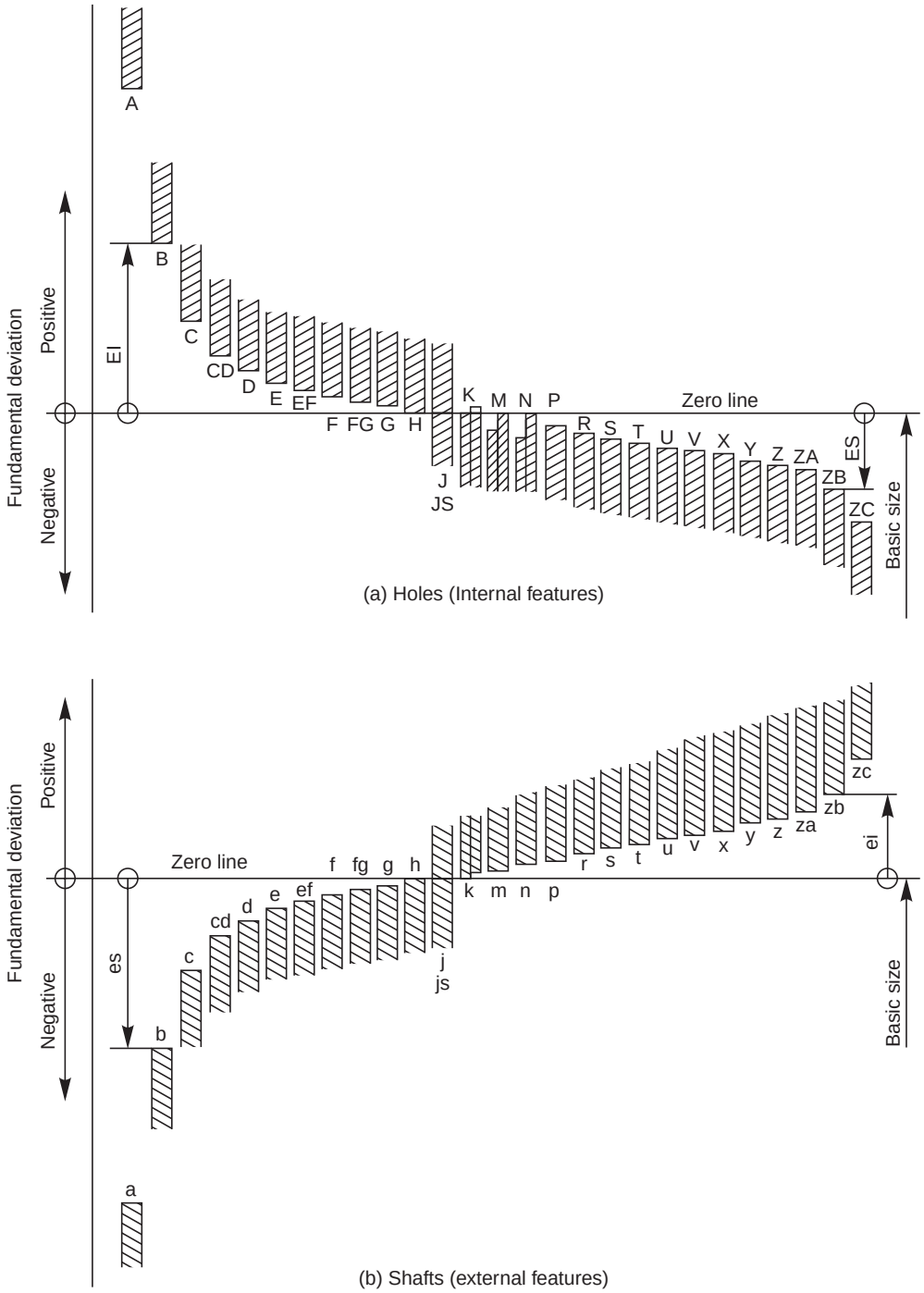

Fig. 15.3 Graphical illustration of tolerance zones

www.EngineeringBooksPdf.com

Figure 15.2 shows the tolerances (in microns or in micrometres) that may be obtained by various manufacturing processes and the corresponding grade number.

15.3.1 Fundamental Tolerances

Tolerance is denoted by two symbols, a letter symbol and a number symbol, called the grade. Figure 15.3 shows the graphical illustration of tolerance sizes or fundamental deviations for letter symbols and Table 15.1 lists the fundamental tolerances of various grades.

It may be seen from Fig. 15.3 that the letter symbols range from **A** to **ZC** for holes and from **a** to **zc** for shafts. The letters **I, L, O, Q, W** and **i, l, o, q, w** have not been used. It is also evident that these letter symbols represent the degree of closeness of the tolerance zone (positive or negative) to the basic size.

Similarly, it can be seen from Table 15.1, that the basic sizes from l mm to 500 mm have been sub-divided into 13 steps or ranges. For each nominal step, there are 18 grades of tolerances, designated as IT 01, IT 0 to IT 1 to IT 16, known as "Fundamental tolerances".

The fundamental tolerance is a function of the nominal size and its unit is given by the emperical relation, standard tolerance unit, $i = 0.45 \times \sqrt[3]{D} + 0.001\ D$

where i is in microns and D is the geometrical mean of the limiting values of the basic steps mentioned above, in millimetres. This relation is valid for grades 5 to 16 and nominal sizes from 3 to 500 mm. For grades below 5 and for sizes above 500 mm, there are other emperical relations for which it is advised to refer IS: 1919–1963. Table 15.1A gives the relation between different grades of tolerances and standard tolerance unit i.

Table 15.1A Relative magnitude of IT tolerances for grades 5 to 16 in terms of tolerance unit i for sizes upto 500 mm

Grade	*IT 5*	*IT 6*	*IT 7*	*IT 8*	*IT 9*	*IT 10*	*IT 11*	*IT 12*	*IT 13*	*IT 14*	*IT 15*	*IT 16*
Tolerance values	7i	10i	16i	25i	40i	64i	100i	160i	250i	400i	640i	1000i

Thus, the fundamental tolerance values for different grades (IT) may be obtained either from Table 15.1 or calculated from the relations given in Table 15.1A.

Example 1 *Calculate the fundamental tolerance for a shaft of 100 mm and grade 7.*

The shaft size, 100 lies in the basic step, 80 to 120 mm and the geometrical mean is

$$D = \sqrt{80 \times 120} = 98 \text{ mm}$$

The tolerance unit, $i = 0.45\ \sqrt[3]{98} + 0.001 \times 98 = 2.172$ microns

For grade 7, as per the Table 15.1A, the value of tolerance is,

$$16i = 16 \times 2.172 = 35 \text{ microns}$$

(tallies with the value in Table 15.1).

15.3.2 Fundamental Deviations

The symbols used (Fig. 15.3) for the fundamental deviations for the shaft and hole are as follows :

	Hole	*Shaft*
Upper deviation (E′ cart superior)	ES	es
Lower deviation (E′ cart inferior)	EI	ei

www.EngineeringBooksPdf.com

Table 15.1 Fundamental tolerances of grades 01, 0 and 1 to 16 (values of tolerances in microns) (1 micron = 0.001 mm)

Diameter steps in mm	*Tolerance Grades*																	
	01	*0*	*1*	*2*	*3*	*4*	*5*	*6*	*7*	*8*	*9*	*10*	*11*	*12*	*13*	*14**	*15**	*16**
To and inc 3	0.3	0.5	0.8	1.2	2	3	4	6	10	14	25	40	60	100	140	250	400	600
Over 3 To and inc 6	0.4	0.6	1	1.5	2.5	4	5	8	12	18	30	48	75	120	180	300	480	750
Over 6 To and inc 10	0.4	0.6	1	1.5	2.5	4	6	9	15	22	36	58	90	150	220	360	580	900
Over 10 To and inc 18	0.5	0.8	1.2	2	3	5	8	11	18	27	43	70	110	180	270	430	700	1100
Over 18 To and inc 30	0.6	1	1.5	2.5	4	6	9	13	21	33	52	84	130	210	330	520	840	1300
Over 30 To and inc 50	0.6	1	1.5	2.5	4	7	11	16	25	39	62	100	160	250	390	620	1000	1600
Over 50 To and inc 80	0.8	1.2	2	3	5	8	13	19	30	46	74	120	190	300	460	740	1200	1900
Over 80 To and inc 120	1	1.5	2.5	4	6	10	15	22	35	54	87	140	220	350	540	870	1400	2200
Over 120 To and inc 180	1.2	2	3.5	5	8	12	18	25	40	63	100	160	250	400	630	1000	1600	2500
Over 180 To and inc 250	2	3	4.5	7	10	14	20	29	46	72	115	185	290	460	720	1150	1850	2900
Over 250 To and inc 315	2.5	4	6	8	12	16	23	32	52	81	130	210	320	520	810	1300	2100	3200
Over 315 To and inc 400	3	5	7	9	13	18	25	36	57	89	140	230	360	570	890	1400	2300	3600
Over 400 To and inc 500	4	6	8	10	15	20	27	40	63	97	155	250	400	630	970	1550	2500	4000

*Upto 1 mm, Grades 14 to 16 are not provided.

www.EngineeringBooksPdf.com

Table 15.2 Fundamental deviations for shafts of types **a** to **k** of sizes upto 500mm *(contd.)*

Fundamental deviation in microns															(1 micron = 0.001 mm)
Diameter steps in mm		*Upper deviation (es)*								**js⁺**	*Lower deviation (ei)*				
		a	*b*	*c*	*d*	*e*	*f*	*g*	*h*		*j*			*k*	
over	*upto*	*All grades*									5.6	7	8	4 *to* 7	≤ 3, > 7
—	*3	– 270	– 140	– 60	– 20	– 14	– 6	– 2	0		– 2	– 4	– 6	– 0	– 0
3	6	– 270	– 140	– 70	– 30	– 20	– 10	– 4	0		– 2	– 4	—	+ 1	0
6	10	– 280	– 150	– 80	– 40	– 25	– 13	– 5	0		– 2	– 5	—	+ 1	0
10	14	– 290	– 150	– 95	– 50	– 32	– 16	– 6	0	± IT/2	– 3	– 6	—	+ 1	0
14	18														
18	24	– 300	– 160	– 110	– 65	– 40	– 20	– 7	0		– 4	– 8	—	+ 2	0
24	30														
30	40	– 310	– 170	– 120	– 80	– 50	– 25	– 9	0		– 5	– 10	—	+ 2	0
40	50	– 320	– 180	– 130											
50	65	– 340	– 190	– 140	– 100	– 60	– 30	– 10	0		– 7	– 12	—	+ 2	0
65	80	– 360	– 200	– 150											
80	100	– 380	– 220	– 170	– 120	– 72	– 36	– 12	0		– 9	– 15	—	+ 3	0
100	120	– 410	– 240	– 180											
120	140	– 460	– 260	– 200											
140	160	– 520	– 280	– 210	– 145	– 85	– 43	– 14	0		– 11	– 18	—	+ 3	0
160	180	– 580	– 310	– 230											

www.EngineeringBooksPdf.com

Table 15.2 Fundamental deviations for shafts of types **a** to **k** of sizes upto 500mm *(contd.)*

Fundamental deviation in microns															(1 micron = 0.001 mm)
Diameter steps in mm		*Upper deviation (es)*								**js+**	*Lower deviation (ei)*				
		a	*b*	*c*	*d*	*e*	*f*	*g*	*h*		*j*			*k*	
over	*upto*	*All grades*									5.6	7	8	4 *to* 7	≤ 3, > 7
180	200	– 660	– 340	– 240											
200	225	– 740	– 380	– 260	– 170	– 100	– 50	– 15	0	± IT/2	– 13	– 21	—	+ 4	0
225	250	– 820	– 420	– 280											
250	280	– 920	– 480	– 300	– 190	– 110	– 56	– 17	0		– 16	– 26	—	+4	0
280	315	– 1050	– 540	– 330											
315	355	– 1200	– 600	– 360	– 210	– 125	– 62	– 18	0		– 18	– 28	—	+ 4	0
355	400	– 1350	– 680	– 400											
400	450	– 1500	– 760	– 440	– 230	– 135	– 68	– 20	0		– 20	– 32	—	+ 5	0
450	500	– 1650	– 840	– 480											

*The deviations of shafts of types a and b are not provided for diameters upto 1 mm

+ For types js in the particular Grades 7 to 11, the two symmetrical deviations ± IT/2 may possibly be rounded, if the IT value in microns is an odd value; by replacing it by the even value immediately below.

www.EngineeringBooksPdf.com

Table 15.2 Fundamental deviations for shafts of types **m** to **zc** of sizes upto 500 mm (*contd.*)

Fundamental deviation in microns															(1 micron = 0.001 mm)
Diameter steps in mm		*Lower deviations (ei)*													
		m	*n*	*p*	*r*	*s*	*t*	*u*	*v*	*x*	*y*	*z*	*za*	*zb*	*zc*
Over	*Upto*	*All grades*													
—	3	+ 2	+ 4	+ 6	+ 10	+ 14	—	+ 18	—	+ 20	—	+ 26	+ 32	+ 40	+ 60
3	6	+ 4	+ 8	+ 12	+ 15	+ 19	—	+ 23	—	+ 28	—	+ 35	+ 42	+ 50	+ 80
6	10	+ 6	+ 10	+ 15	+ 19	+ 23	—	+ 28	—	+ 34	—	+ 42	+ 52	+ 67	+ 97
10	14	+ 7	+ 12	+ 18	+ 23	+ 28	—	+ 33	—	+ 40	—	+ 50	+ 64	+ 90	+ 130
14	18								+ 39	+ 45	—	+ 60	+ 77	+ 108	+ 150
18	24	+ 8	+ 15	+ 22	+ 28	+ 35	—	+ 41	+ 47	+ 54	+ 63	+ 73	+ 98	+ 136	+ 188
24	30						+ 41	+ 48	+ 55	+ 64	+ 75	+ 88	+ 118	+ 160	+ 218
30	40	+ 9	+ 17	+ 26	+ 34	+ 43	+ 48	+ 60	+ 68	+ 80	+ 94	+ 112	+ 148	+ 200	+ 274
40	50						+ 54	+ 70	+ 81	+ 97	+ 114	+ 136	+ 180	+ 242	+ 325
50	65	+ 11	+ 20	+ 32	+ 41	+ 53	+ 66	+ 87	+ 102	+ 122	+ 144	+ 172	+ 226	+ 300	+ 405
65	80				+ 43	+ 59	+ 75	+ 102	+ 120	+ 146	+ 174	+ 210	+ 274	+ 360	+ 480
80	100	+ 13	+ 23	+ 37	+ 51	+ 71	+ 91	+ 124	+ 146	+ 178	+ 214	+ 258	+ 335	+ 445	+ 585
100	120				+ 54	+ 79	+ 104	+ 144	+ 172	+ 210	+ 254	+ 310	+ 400	+ 525	+ 690
120	140				+ 63	+ 92	+ 122	+ 170	+ 202	+ 248	+ 300	+ 365	+ 470	+ 620	+ 800
140	160	+ 15	+ 27	+ 43	+ 65	+ 100	+ 134	+ 190	+ 228	+ 280	+ 340	+ 415	+ 535	+ 700	+ 900
160	180				+ 68	+ 108	+ 146	+ 210	+ 252	+ 310	+ 380	+ 465	+ 600	+ 780	+ 1000

www.EngineeringBooksPdf.com

Table 15.2 Fundamental deviations for shafts of types **m** to **zc** of sizes upto 500mm (*contd.*)

Fundamental deviation in microns															(1 micron = 0.001 mm)
Diameter steps in mm		*Lower deviations (ei)*													
		m	*n*	*p*	*r*	*s*	*t*	*u*	*v*	*x*	*y*	*z*	*za*	*zb*	*zc*
Over	*Upto*	*All grades*													
180	200				+ 77	+ 122	+ 166	+ 236	+ 274	+ 350	+ 425	+ 520	+ 670	+ 880	+ 1150
200	225	+ 17	+ 31	+ 50	+ 80	+ 130	+ 180	+ 258	+ 310	+ 385	+ 470	+ 575	+ 740	+ 960	+ 1250
225	250				+ 84	+ 140	+ 196	+ 284	+ 340	+ 425	+ 520	+ 640	+ 820	+ 1050	+ 1350
250	280				+ 94	+ 158	+ 218	+ 315	+ 385	+ 475	+ 580	+ 710	+ 920	+ 1200	+ 1550
280	315	+ 20	+ 34	+ 56	+ 98	+ 170	+ 240	+ 350	+ 425	+ 525	+ 650	+ 790	+ 1000	+ 1300	+ 1700
315	355				+ 108	+ 190	+ 268	+ 390	+ 475	+ 590	+ 730	+ 900	+ 1150	+ 1500	+ 1900
355	400	+ 21	+ 37	+ 62	+ 114	+ 208	+ 294	+ 435	+ 530	+ 660	+ 820	+ 1000	+ 1300	+ 1650	+ 2100
400	450				+ 126	+ 232	+ 330	+ 490	+ 595	+ 740	+ 920	+ 1100	+ 1450	+ 1850	+ 2400
450	500	+ 23	+ 40	+ 68	+ 132	+ 252	+ 360	+ 540	+ 660	+ 820	+ 1000	+ 1250	+ 1600	+ 2100	+ 2600

www.EngineeringBooksPdf.com

Table 15.3 Fundamental deviations for holes of types **A** to **N** for sizes upto 500 mm *(contd.)*

A to N

Fundamental deviation in microns (1 micron = 0.001 mm)

Diameter steps in mm		*Lower deviations (EI)*														*Upper deviations (ES)*				
		*A**	**B*	*C*	*D*	*E*	*F*	*G*	*H*	*Js+*	*J*			*K*		*M*		*N*		
Over	*Upto*	*All grades*									6	7	8	≤ 8	> 8	≤ 8 ‡	> 8	≤ 8	> 8*	≤ 7
—	3*	+ 270	+ 140	+ 60	+ 20	+ 14	+ 6	+ 2	0	± IT/2	+ 2	+ 4	+ 6	0	0	– 2	– 2	– 4	– 4	Same deviation as for grades > 7 + Δ
3	6	+ 270	+ 140	+ 70	+ 30	+ 20	+ 10	+ 4	0		+ 5	+ 6	+ 10	– 1 + Δ	—	– 4 + Δ	– 4+Δ	– 8 + Δ	0	
6	10	+ 280	+ 150	+ 80	+ 40	+ 25	+ 13	+ 5	0		+ 5	+ 8	+ 12	– 1 + Δ	—	– 6+ Δ	– 6+Δ	– 10 + Δ	0	
10	14	+ 290	+ 150	+ 95	+ 50	+ 32	+ 16	+ 6	0		+ 6	+ 10	+ 15	– 1+ Δ	—	– 7 + Δ	– 7	– 12 + Δ	0	
14	18																			
18	24	+ 300	+ 160	+ 110	+ 65	+ 40	+ 20	+ 7	0		+ 8	+ 12	+ 20	– 2 + Δ	—	– 8 + Δ	– 8	– 15 + Δ	0	
24	30																			
30	40	+ 310	+ 170	+ 120	+ 80	+ 50	+ 25	+ 9	0		+ 10	+ 14	+ 24	– 2 + Δ	—	– 9 + Δ	– 9	– 17 + Δ	0	
40	50	+ 320	+ 180	+ 130																
50	65	+ 340	+ 190	+ 140	+ 100	+ 60	+ 30	+ 10	0		+ 13	+ 18	+ 28	– 2 + Δ	—	– 11+ Δ	– 11	– 20 + Δ	0	
65	80	+ 360	+ 200	+ 150																
80	100	+ 380	+ 220	+ 170	+ 120	+ 72	+ 36	+ 12	0		+ 16	+ 22	+ 34	– 3 + Δ	—	– 13 + Δ	– 13	– 23 + Δ	0	
100	120	+ 410	+ 240	+ 180																

www.EngineeringBooksPdf.com

Table 15.3 Fundamental deviations for holes of types **A** to **N** for sizes upto 500mm *(contd.)*

A to N

Fundamental deviation in microns																				(1 micron = 0.001 mm)
Diameter steps in mm		*Lower deviations (EI)*														*Upper deviations (ES)*				
		*A**	**B*	*C*	*D*	*E*	*F*	*G*	*H*	*Js+*	*J*			*K*		*M*		*N*		
Over	*Upto*	*All grades*									6	7	8	≤ 8	> 8	≤ 8 ‡	> 8	≤ 8	> 8*	≤ 7
120	140	+ 460	+ 260	+ 200																
140	160	+ 520	+ 280	+ 210	+ 145	+ 85	+ 43	+ 14	0		+ 18	+ 26	+ 41	– 3 + Δ	—	– 15 + Δ	– 15	– 27 + Δ	0	
160	180	+ 580	+ 310	+ 230																
180	200	+ 660	+ 340	+ 240																
200	225	+ 740	+ 380	+ 260	+ 170	+ 100	+ 50	+ 15	0		+ 22	+ 30	+ 47	– 4+ Δ	—	– 17 + Δ	– 17	– 31 + Δ	0	
225	250	+ 820	+ 420	+ 280						± 1T/2										Same deviation as for grades > 7 + Δ
250	280	+ 920	+ 480	+ 300	+ 190	+ 110	+ 56	+ 17	0		+ 25	+ 36	+ 55	– 4+ Δ	—	– 20 + Δ	– 20	– 34 + Δ	0	
280	315	+ 1050	+ 540	+ 330																
315	355	+ 1200	+ 600	+ 360	+ 210	+ 125	+ 62	+ 18	0		+ 29	+ 39	+ 60	– 4+ Δ	—	– 21 + Δ	– 21	– 37 + Δ	0	
355	400	+ 1350	+ 680	+ 400																
400	450	+ 1500	+ 760	+ 440	+ 230	+ 135	+ 68	+ 20	0		+ 33	+ 43	+ 66	– 5+ Δ	—	– 23 + Δ	– 23	– 40 + Δ	0	
450	500	+ 1650	+ 840	+ 480																

* The deviation of holes of types A and B in all grades >8 are not for diameters upto 1 mm.

+ For the hole of type Js in the grades 7 and 11, the two symmetrical ± deviations IT/2 may possibly rounded. If the IT value in microns is an odd value, replace it by the even value immediately below.

‡ Special case: For the hole M6, ES = 9 from 250 to 315 (instead of – 11).

www.EngineeringBooksPdf.com

Table 15.3 Fundamental deviations for holes of types P to ZC for sizes upto 500mm (*Contd.*)

P to ZC

Fundamental deviation in microns														(1 micron = 0.001 mm)					
Diameter steps in mm		*Upper deviations (ES)*																	
		P	*R*	*S*	*T*	*U*	*V*	X	*Y*	Z	ZA	*ZB*	ZC	Δ in microns*					
Over	*Upto*	>7												3	4	5	6	7	8
—	3	– 6	– 10	– 14	—	– 18	—	– 20	—	– 26	– 32	– 40	– 60	Δ = 0					
3	6	– 12	– 15	– 19	—	– 23	—	– 28	—	– 35	– 42	– 50	– 80	1	1.5	1	3	4	6
6	10	– 15	– 19	– 23	—	– 28	—	– 34	—	– 42	– 52	– 67	– 97	1	1.5	2	3	6	7
10	14	– 18	– 23	– 28	—	– 33	—	– 40	—	– 50	– 64	– 90	– 130	1	2	3	3	7	9
14	18						– 39	– 45	—	– 60	– 77	– 109	– 150						
18	24	– 22	– 28	– 35	—	– 41	– 47	– 54	– 63	– 73	– 93	– 136	– 188	1.5	2	3	4	8	12
24	30				– 41	– 48	– 55	– 64	– 75	– 88	– 118	– 160	– 218						
30	40	– 26	– 34	– 43	– 48	– 60	– 68	– 80	– 94	– 112	– 148	– 200	– 274	1.5	3	4	5	9	14
40	50				– 54	– 70	– 81	– 97	– 114	– 136	– 180	– 242	– 325						
50	65	– 32	– 41	– 53	– 65	– 87	– 102	– 122	– 144	– 172	– 226	– 300	– 405	2	3	5	6	11	16
65	80		– 43	– 59	– 75	– 102	– 120	– 146	– 174	– 210	– 274	– 360	– 480						
80	100	– 37	– 51	– 71	– 91	– 124	– 146	– 178	– 214	– 258	– 335	– 445	– 585	2	4	5	7	13	19
100	120		– 54	– 79	– 104	– 144	– 172	– 210	– 254	– 310	– 400	– 525	– 690						
120	140		– 63	– 92	– 122	– 170	– 202	– 248	– 300	– 365	– 470	– 620	– 800	3	4	6	7	15	23
140	160	– 43	– 65	– 100	– 134	– 190	– 228	– 280	– 340	– 415	– 535	– 700	– 900						
160	180		– 68	– 108	– 146	– 210	– 252	– 310	– 380	– 465	– 600	– 780	– 1000						

www.EngineeringBooksPdf.com

Table 15.3 Fundamental deviations for holes of types P to ZC for sizes upto 500mm (*Contd.*)

P to ZC

Fundamental deviation in microns														(1 micron = 0.001 mm)					
Diameter steps in mm		*Upper deviations (ES)*																	
		p	*R*	*S*	*T*	*U*	*V*	X	*Y*	Z	ZA	*ZB*	ZC	Δ in microns*					
Over	*Upto*	>7												*3*	*4*	*5*	*6*	*7*	*8*
180	200		– 77	– 122	– 166	– 236	– 284	– 350	– 425	– 520	– 670	– 880	– 1150						
200	225	– 50	– 80	– 130	– 180	– 256	– 310	– 385	– 470	– 575	– 740	– 960	– 1250	3	4	6	9	17	26
225	250		– 84	– 140	– 196	– 284	– 340	– 425	– 520	– 640	– 820	– 1050	– 1350						
250	280	– 56	– 94	– 158	– 218	– 315	– 385	– 475	– 580	– 710	– 920	– 1200	– 1550	4	4	7	9	20	29
280	315		– 98	– 170	– 240	– 350	– 425	– 525	– 650	– 790	– 1000	– 1300	– 1700						
315	355	– 62	– 108	– 190	– 268	– 390	– 475	– 590	– 730	– 900	– 1150	– 1500	– 1900	4	5	7	11	21	32
355	400		– 114	– 208	– 294	– 435	– 530	– 650	– 820	– 1000	– 1300	– 1650	– 2100						
400	450	– 68	– 126	– 232	– 330	– 490	– 595	– 740	– 920	– 1100	– 1450	– 1850	– 2400	5	5	7	13	23	34
450	500		– 132	– 252	– 360	– 540	– 660	– 820	– 1000	– 1250	– 1600	– 2100	– 2600						

*In determining K, M, N upto grade 8 and P to ZC upto grade 7, take the Δ values from the columns on the right.

Example: For P7, from diameters 18 to 30 mm, Δ = 8; hence ES = – 14.

www.EngineeringBooksPdf.com

For each letter symbol from **a** to **zc** for shafts and **A** to **ZC** for holes; the magnitude and size of one of the two deviations may be obtained from Table 15.2 or 15.3 and the other deviation is calculated from the following relationship :

Shafts, ei = es – IT

Holes, EI = ES – IT

where IT is fundamental tolerance of grade obtained from Table 15.1.

NOTE The term 'shaft' in this chapter includes all external features (both cylindrical and non-cylindrical) and the term 'hole' includes all internal features of any component.

15.3.2.1 Formulae for calculating fundamental shaft deviations

Table 15.4 shows the formulae for calculating the fundamental deviation of shafts. The value of D is the geometric mean diameter of the range.

Table 15.4 Formulae for fundamental deviation for shafts upto 500 mm

Upper deviation (es)		*Lower deviation (ei)*	
Shaft designation	*In microns (for D in mm)*	*Shaft designation*	*In microns (For D in mm)*
a	$= -(265 + 1.3D)$ for $D \leq 120$	k4 to k7	$= 0.6 \sqrt[3]{D}$
	$= -3.5\,D$ for $D > 120$	k for grades ≤ 3 and ≥ 8	= 0
b	$\approx -(140 + 0.85\,D)$ for $D \leq 160$	m	= + (IT 7 – IT 6)
	$\approx -1.8\,D$ for $D > 160$	n	$= +5\,D^{0.34}$
		p	= + IT 7 + 0 to 5
c	$= -52\,D^{0.2}$ for $D \leq 40$	r	= geometric mean of values *ei* for *p* and *s*
	$= -(95 + 0.8\,D)$ for $D > 40$	s	= + IT 8 + 1 to 4 for $D \leq 50$
d	$= -16\,D^{0.44}$		= + IT 7 + 0.4 *D* for $D > 50$
e	$= -11\,D^{0.41}$	t	= IT 7 + 0.63 *D*
f	$= -5.5\,D^{0.41}$	u	= + IT 7 + *D*
g	$= -2.5\,D^{0.34}$	v	= + IT 7 + 1.25 *D*
h	= 0	x	= + IT 7 + 1.6 *D*
		y	= + IT 7 + 2 *D*
		z	= + IT 7 + 2.5 *D*
		za	= + IT 8 + 3.15 *D*
		zb	= + IT 9 + 4 *D*
j5 to j8	no formula	zc	= + IT 10 + 5 *D*

For Js : the two deviations are equal to $\pm \dfrac{IT}{2}$

www.EngineeringBooksPdf.com

15.3.2.2 Formulae for calculating fundamental hole deviation

The fundamental deviation for holes are derived from the formulae, corresponding to the shafts, with the following modifications :

(*i*) As a general rule, all the deviations for the types of holes mentioned in (*ii*) and (*iii*) below, are identical with the shaft deviation of the same symbol, *i.e.*, letter and grade but disposed on the other side of the zero line. For example, the lower deviation EI for the hole is equal to the upper deviation *es* of the shaft of the same letter symbol but of opposite sign.

(*ii*) For the holes of sizes above 3 mm and of type N and of grade 9 and above, the upper deviation, ES is 0.

(*iii*) For the holes of size above 3 mm of types J, K, M and N of grades upto and inclusive of 8 and for the types P to ZC of grades upto and inclusive of 7, the upper deviation ES is equal to the lower deviation *ei* of the shaft of same letter symbol but one grade finer (less in number) and of opposite sign, increased by the difference between the tolerances of the two grades in question.

Example 2 *Calculate the fundamental deviations for the shaft sizes given below :*

(a) 30 e8 (b) 50 g6 (c) 40 m6.

From Table 15.4, the deviations for shafts are obtained :

(*a*) The upper deviation *es* for the shaft *e*

$$= -11\,D^{0.41}$$

The value for $D = \sqrt{18 \times 30} = 23.24$ mm.

Hence, *es* = – 40 microns (tallies with the value in Table 15.2).

(*b*) The upper deviation *es* for the shaft *g*

$$= -2.5\,D^{0.34}$$

The value for $D = \sqrt{30 \times 50} = 38.73$ mm.

Hence, *es* = – 9 microns (tallies with the value in Table 15.2)

(*c*) The lower deviation *ei* for the shaft *m*

$$= +\,(\text{IT } 7 - \text{IT } 6)$$

From the Table 15.1, the size 40 is in the range 30 and 50 and hence the mean diameter *D*, is 38.73 mm

Tolerance unit $i = 0.45\,\sqrt[3]{D} + 0.001\,D$

$= 1.58$ microns

The fundamental tolerance for grade 7, from the Table 15.1 is 16*i*, *i.e.,* 25 microns.

The fundamental tolerance for grade 6 is 10*i* or 16 microns.

Hence, *ei* = 25 (IT 7) – 16 (IT 6) = + 9 microns (tallies with the value in Table 15.2).

Example 3 *Calculate the fundamental deviations for the hole sizes given below :*

(a) 40 D9 (b) 65 F8.

From Table 15.4, the deviations for holes also can be obtained (article 15.3.2.2).

(*a*) The lower deviation EI for the hole *D* is given by

$$EI = +\,16\,D^{0.44}, \text{ where } D = \sqrt{30 \times 50} = 38.73 \text{ mm}$$

Thus, EI = 80 microns (tallies with the value in Table 15.3).

www.EngineeringBooksPdf.com

(*b*) Lower deviation EI for the hole F

$$= + 5.5\ D^{0.41}, \text{ where } D = \sqrt{50 \times 80}$$

Hence, EI = 30 microns (tallies with the value in Table 15.3).

Example 4 *A journal bearing consists of a bronze bush of diameter 100 mm fitted into a housing and a steel shaft of 50 mm diameter, running in the bush, with oil as lubricant. Determine the working dimensions of (a) bore of the housing, (b) bush and (c) shaft. Calculate the maximum and minimum interference or clearance.*

Step 1: Select the nature of assembly or fit based on the function. Referring to Table 15.6, the fits to be employed are selected as below:

(*a*) for the bush and housing, H7/p6 (interference fit),

(*b*) for the shaft and bush, H7/f7 (normal running fit).

Step 2: Obtain the tolerances on the linear dimensions of the parts. From Table 15.1, the fundamental tolerances (IT) for different grades, based on the size are :

(*a*) for dia. 100 and grade 6 = 22 microns,

(*b*) for dia. 100 and grade 7 = 35 microns,

(*c*) for dia. 50 and grade 7 = 25 microns.

Step 3: Obtain the fundamental deviations based on the type of hole/shaft and thus the respective sizes. From Table 15.2,

(*a*) for a hole of type H (housing)

lower deviation, EI = 0.000

upper deviation, ES = EI + IT

= 0.035 mm

Hence, dimension of the housing bore = $100^{+0.035}_{+0.000}$.

(*b*) for a shaft of type *p* (bush),

lower deviation, *ei* = + 0.037 (Table 15.2)

upper deviation, *es* = ei + IT

= 0.037 + 0.022 = 0.059 mm

Hence, the outside size of the bush = $100^{+0.059}_{+0.037}$.

(*c*) for a hole of type H (bush),

lower deviation, EI = 0.000

upper deviation, ES = EI + IT

= 0.025 mm

Hence, the bore of the bush = $50^{+0.025}_{+0.000}$.

(*d*) for a shaft of type *f*,

upper deviations, *es* = – 0.025 (Table 15.2)

lower deviation, *ei* = *es* – IT

= – 0.025 – 0.025

= – 0.05 mm

Hence, shaft dimension is = $50^{-0.025}_{-0.050}$

www.EngineeringBooksPdf.com

Step 4: Calculate the interference/clearance

(*a*) between the bush and housing :

$$\text{Maximum interference} = 100.00 - 100.059$$
$$= -0.059 \text{ mm}$$
$$\text{Minimum interference} = 100.035 - 100.037$$
$$= -0.002 \text{ mm}$$

(*b*) between the bush and shaft :

$$\text{Maximum clearance} = 50.025 - 49.050$$
$$= +0.075 \text{ mm}$$
$$\text{Minimum clearance} = 50.000 - 49.075$$
$$= +0.025 \text{ mm}$$

15.3.3 Method of Placing Limit Dimensions (Tolerancing Individual Dimensions)

There are three methods used in industries for placing limit dimensions or tolerancing individual dimensions.

Method 1

In this method, the tolerance dimension is given by its basic value, followed by a symbol, comprising of both a letter and a numeral. The following are the equivalent values of the terms given in Fig. 15.4 :

$$\phi\, 25H7 = \phi\, 25^{+0.021}_{+0.000}$$

$$10H10 = 10^{+0.058}_{+0.000}$$

$$40C11 = 40^{+0.280}_{+0.120}$$

$$10h9 = 10^{-0.000}_{-0.036}$$

$$\phi\, 25h9 = \phi\, 25^{-0.000}_{-0.052}$$

$$\phi\, 40h11 = \phi\, 40^{-0.000}_{-0.160}$$

The terms $\phi\, 25H7$, $10H10$ and $40C11$ refer to internal features, since the terms involve capital letter symbols. The capital letter '*H*' signifies that the lower deviation is zero and the number symbol 7 signifies the grade, the value of which is 21 microns (Table 15.1) which in-turn is equal to the upper deviation. The capital letter *C* signifies that the lower deviations is 120 microns (Table 15.3). The value of the tolerance, corresponding to grade 11 is 160 microns (Table 15.1). The upper deviation is obtained by adding 160 to 120 which is equal to 280 microns or 0.28 mm.

www.EngineeringBooksPdf.com

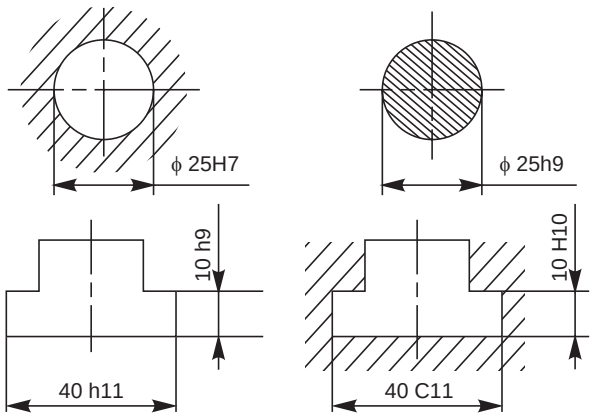

Fig. 15.4 Toleranced dimensions for internal and external features

The terms $\phi 40H11$ and $10h9$ refer to external features, since the terms involve lower case letters. The letter '*h*' signifies that the upper deviation is zero (Fig. 15.3) and the number symbol 11 signifies the grade, the value of which is 160 microns (Table 15.1), which in-turn is equal to the lower deviation.

Method 2

In this method, the basic size and the tolerance values are indicated above the dimension line; the tolerance values being in a size smaller than that of the basic size and the lower deviation value being indicated in line with the basic size.

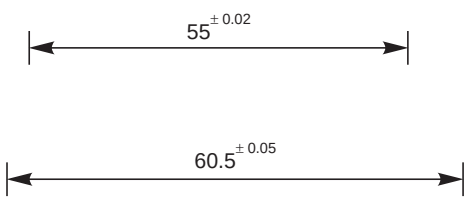

Fig. 15.5 Bilateral tolerance of equal variation

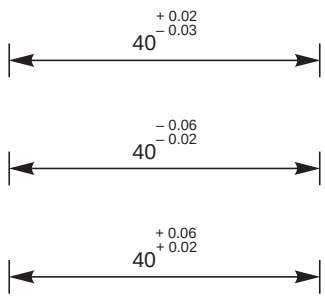

Fig. 15.6 Bilateral tolerance of unequal variation

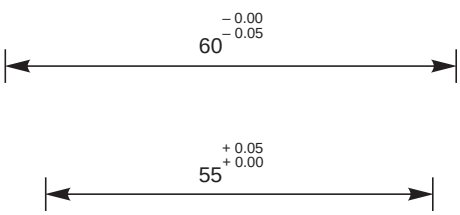

Fig. 15.7 Unilateral tolerance with zero variation in one direction

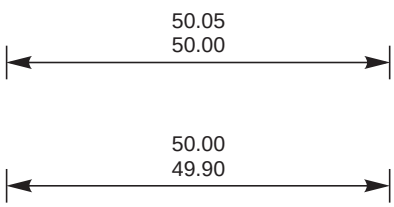

Fig. 15.8 Maximum and minimum size directly indicated

Figure 15.5 shows dimensioning with a bilateral tolerance; the variation form the basic size being equal on either side.

www.EngineeringBooksPdf.com

Figure 15.6 shows dimensioning with a bilateral tolerance; the variation being unequal.

Figure 15.7 shows dimensioning with a unilateral tolerance; the variation being zero in one direction.

Method 3

In this method, the maximum and minimum sizes are directly indicated above the dimension line (Fig. 15.8).

When assembled parts are dimensioned, the fit is indicated by the basic size common to both the components, followed by the hole tolerance symbol first and then by the shaft tolerance symbol (*e.g.*, ϕ 25 H7/*h*6, etc., in Fig. 15.9).

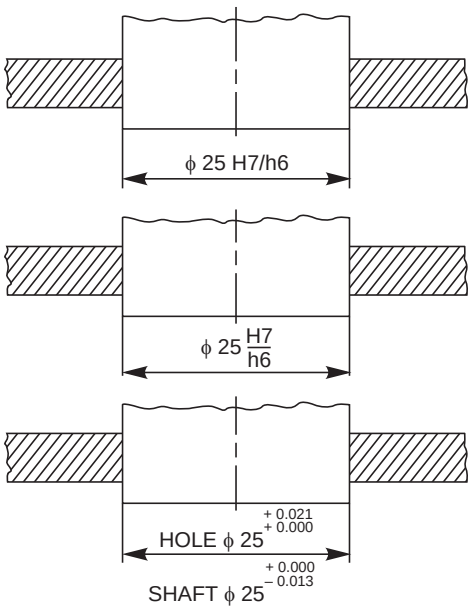

Fig. 15.9 Toleranced dimensioning of assembled parts

15.4 FITS

The relation between two mating parts is known as a fit. Depending upon the actual limits of the hole or shaft sizes, fits may be classified as clearance fit, transition fit and interference fit.

15.4.1 Clearance Fit

It is a fit that gives a clearance between the two mating parts.

15.4.1.1 Minimum clearance

It is the difference between the minimum size of the hole and the maximum size of the shaft in a clearance fit.

15.4.1.2 Maximum clearance

It is the difference between the maximum size of the hole and the minimum size of the shaft in a clearance or transition fit.

The fit between the shaft and hole in Fig. 15.10 is a clearance fit that permits a minimum clearance (allowance) value of 29.95 – 29.90 = + 0.05 mm and a maximum clearance of + 0.15 mm.

15.4.2 Transition Fit

This fit may result in either an interference or a clearance, depending upon the actual values of the tolerance of individual parts. The shaft in Fig. 15.11 may be either smaller or larger

www.EngineeringBooksPdf.com

than the hole and still be within the prescribed tolerances. It results in a clearance fit, when shaft diameter is 29.95 and hole diameter is 30.05 (+ 0.10 mm) and interference fit, when shaft diameter is 30.00 and hole diameter 29.95 (– 0.05 mm).

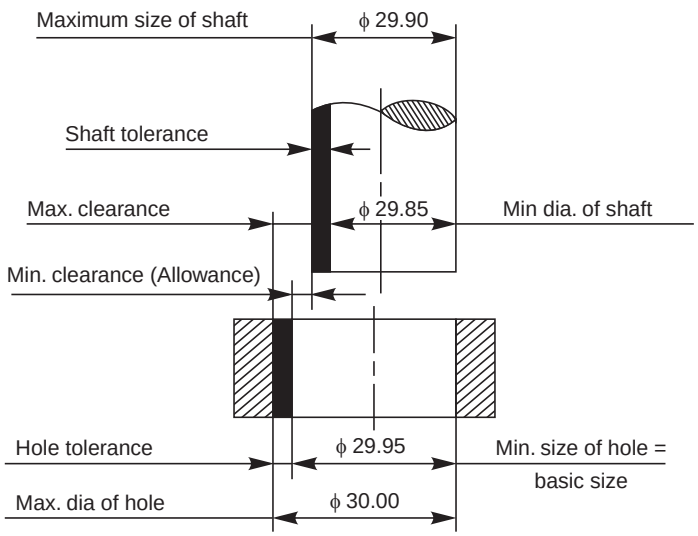

Fig. 15.10 Clearance fit

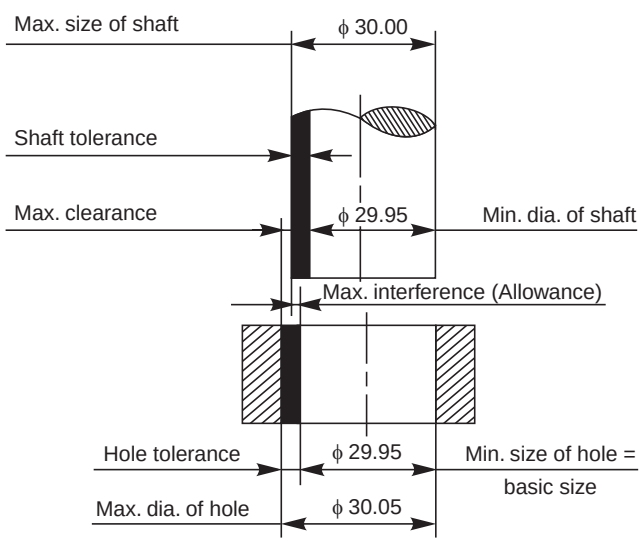

Fig. 15.11 Transition fit

15.4.3 Interference Fit

If the difference between the hole and shaft sizes is negative before assembly; an interference fit is obtained.

15.4.3.1 Minimum Interference

It is the magnitude of the difference (negative) between the maximum size of the hole and the minimum size of the shaft in an interference fit before assembly.

www.EngineeringBooksPdf.com

15.4.3.2 Maximum interference

It is the magnitude of the difference between the minimum size of the hole and the maximum size of the shaft in an interference or a transition fit before assembly.

The shaft in Fig. 15.12 is larger than the hole, so it requires a press fit, which has an effect similar to welding of two parts. The value of minimum interference is 30.25 – 30.30 = – 0.05 mm and maximum interference is 30.15 – 30.40 = – 0.25 mm.

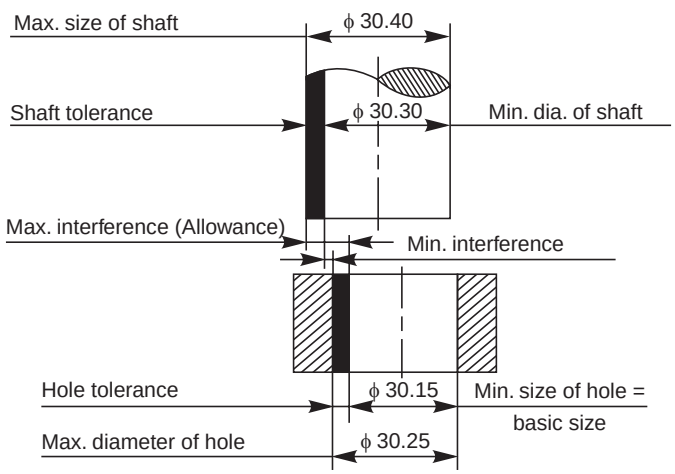

Fig. 15.12 Interference fit

Figure 15.13 shows the conventional representation of these three classes of fits.

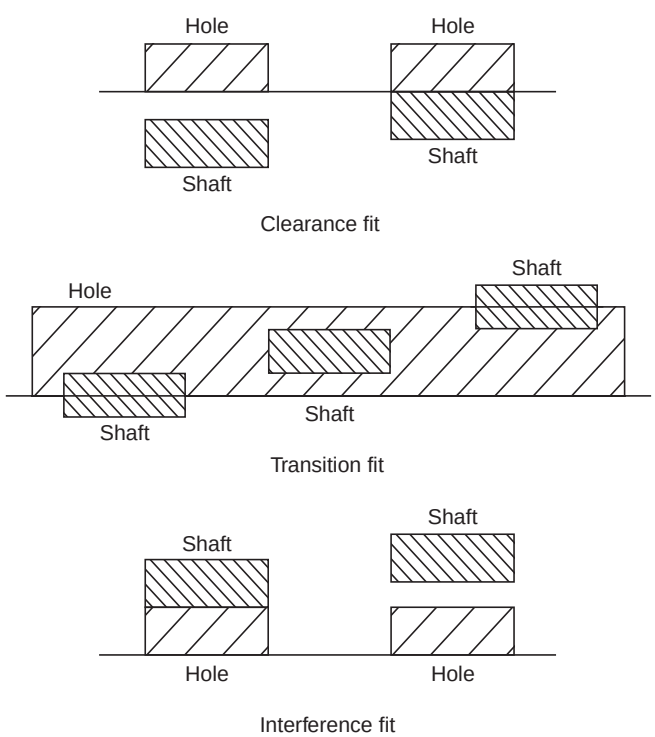

Fig. 15.13 Schematic representation of fits

www.EngineeringBooksPdf.com

15.4.4 Hole Basis and Shaft Basis Systems

In working out limit dimensions for the three classes of fits; two systems are in use, *viz.*, the hole basis system and shaft basis system.

15.4.4.1 Hole Basis System

In this system, the size of the shaft is obtained by subtracting the allowance from the basic size of the hole. This gives the design size of the shaft. Tolerances are then applied to each part separately. In this system, the lower deviation of the hole is zero. The letter symbol for this situation is '*H*'.

The hole basis system is preferred in most cases, since standard tools like drills, reamers, broaches, etc., are used for making a hole.

15.4.4.2 Shaft Basis System

In this system, the size of the hole is obtained by adding the allowance to the basic size of the shaft. This gives the design size for the hole. Tolerances are then applied to each part. In this system, the upper deviation of the shaft is zero. The letter symbol for this situation is '*h*'.

The shaft basis system is preferred by (*i*) industries using semi-finished shafting as raw materials, *e.g.,* textile industries, where spindles of same size are used as cold-finished shafting and (*ii*) when several parts having different fits but one nominal size is required on a single shaft.

Figure 15.14 shows the representation of the hole basis and the shaft basis systems schematically. Table 15.5 gives equivalent fits on the hole basis and shaft basis systems to obtain the same fit.

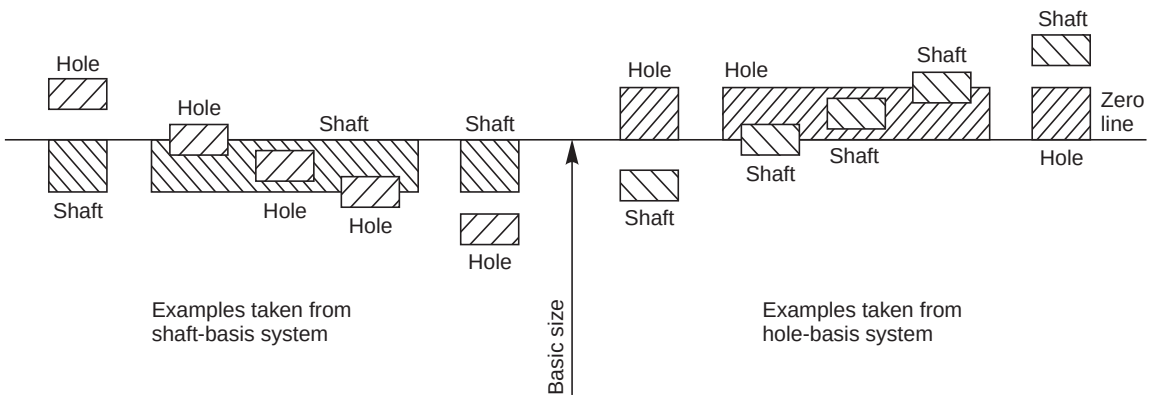

Fig. 15.14 Examples illustrating shaft basis and hole basis systems

Application of various types of fits in the hole basis system is given in Table 15.6.

Table 15.5. Equivalent fits on the hole basis and shaft basis systems

Clearance		*Transition*		*Interference*	
Hole basis	*Shaft basis*	*Hole basis*	*Shaft basis*	*Hole basis*	*Shaft basis*
H7 – c8	C8 – h7	H6 – j5	J6 – h5	H6 – n5	N6 – h5
H8 – c9	C9 – h8	H7 – j6	J7 – h6		
H11 – c11	C11 – h11	H8 – j7	J8 – h7	H6 – p5	P6 – h5
				H7 – p6	p7 – h6
H7 – d8	D8 – h7	H6 – k5	K6 – h5		
H8 – d9	D9 – h8	H7 – k6	K7 – h6	H6 – r5	R6 – h5

(Contd.)...

www.EngineeringBooksPdf.com

H11 – d11	D11 – h11	H8 – k7	K8 – h7	H7 – r6	R7 – h6
H6 – e7	E7 – h6	H6 – m5	M6 – h5	H6 – s5	S6 – h5
H7 – e8	E8 – h7	H7 – m6	M7 – h6	H7 – s6	S7 – h6
H8 – e8	E8 – h8	H8 – m7	M8 – h7	H8 – s7	S8 – h7
H6 – f6	F6 – h6	H7 – n6	N7 – h6	H6 – t5	T6 – h5
H7 – f7	F7 – h7	H8 – n7	N8 – h7	H7 – t6	T7 – h6
H8 – f8	F8 – h8			H8 – t7	T8 – h7
		H8 – p7	P8 – h7		
H6 – g5	G6 – h5			H6 – u5	U6 – h5
H7 – g6	G7 – h6	H8 – r7	R8 – h7	H7 – u6	U7 – h6
H8 – g7	G8 – h7			H8 – u7	U8 – h7

Table 15.6. Types of fits with symbols and applications

Type of fit	*Symbol of fit*	*Examples of application*
Interference fit		
Shrink fit	H8/u8	Wheel sets, tyres, bronze crowns on worm wheel hubs, couplings under certain conditions, etc.
Heavy drive fit	H7/s6	
Press fit	H7/r6	Coupling on shaft ends, bearing bushes in hubs, valve seats, gear wheels.
Medium press fit	H7/p6	
Transition fit		
Light press fit	H7/n6	Gears and worm wheels, bearing bushes, shaft and wheel assembly with feather key.
Force fit	H7/m6	Parts on machine tools that must be changed without damage, *e.g.,* gears, belt pulleys, couplings, fit bolts, inner ring of ball bearings.
Push fit	H7/k6	Belt pulleys, brake pulleys, gears and couplings as well as inner rings of ball bearings on shafts for average loading conditions.
Easy push fit	H7/j6	Parts which are to be frequently dismantled but are secured by keys, *e.g.,* pulleys, hand-wheels, bushes, bearing shells, pistons on piston rods, change gear trains.
Clearance fit		
Precision sliding fit	H7/h6	Sealing rings, bearing covers, milling cutters on milling mandrels, other easily removable parts.
Close running fit	H7/g6	Spline shafts, clutches, movable gears in change gear trains, etc.
Normal running fit	H7/f7	Sleeve bearings with high revolution, bearings on machine tool spindles.
Easy running fit	H8/e8	Sleeve bearings with medium revolution, grease lubricated bearings of wheel boxes, gears sliding on shafts, sliding blocks.
Loose running fit	H8/d9	Sleeve bearings with low revolution, plastic material bearings.
Slide running fit	H8/c11	Oil seals (Simmerrings) with metal housing (fit in housing and contact surface on shaft), multi-spline shafts.

www.EngineeringBooksPdf.com

15.5 TOLERANCES OF FORM AND POSITION

15.5.1 Introduction

Tolerances of size are not always sufficient to provide the required control of form. For example, in Fig. 15.15 *a* the shaft has the same diameter measurement in all possible positions but is not circular; in Fig. 15.15 *b*, the component has the same thickness throughout but is not flat and in Fig. 15.15 *c*, the component is circular in all cross-sections but is not straight. The form of these components can be controlled by means of geometrical tolerances.

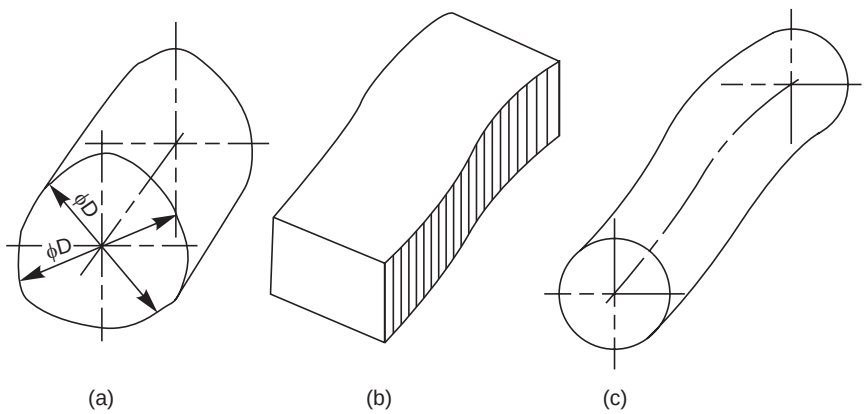

Fig. 15.15 Errors of form

15.5.2 Form Variation

It is a variation of the actual condition of a form feature (surface, line) from geometrically ideal form.

15.5.3 Position Variation

It is a variation of the actual position of the form feature from the geometrically ideal position, with reference to another form (datum) feature.

15.5.4 Geometrical Tolerance

Geometrical tolerance is defined as the maximum permissible overall variation of form or position of a feature.

Geometrical tolerances are used,

(*i*) to specify the required accuracy in controlling the form of a feature,

(*ii*) to ensure correct functional positioning of the feature,

(*iii*) to ensure the interchangeability of components, and

(*iv*) to facilitate the assembly of mating components.

15.5.5 Tolerance Zone

It is an imaginary area or volume within which the controlled feature of the manufactured component must be completely contained (Figs. 15.16 *a* and *b*).

15.5.6 Definitions

15.5.6.1 Datum

It is a theoretically exact geometric reference (such as axes, planes, straight lines, etc.) to which the tolerance features are related (Fig. 15.17).

www.EngineeringBooksPdf.com

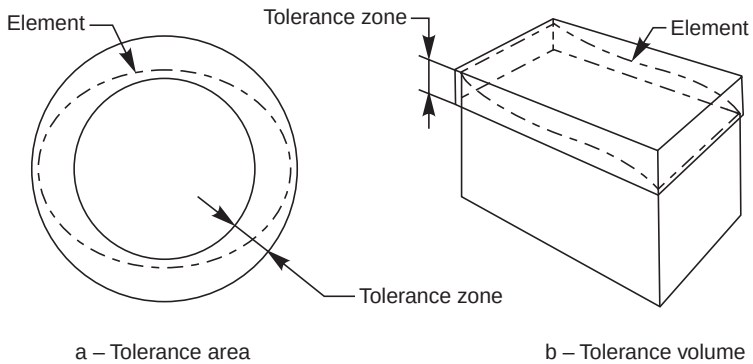

Fig. 15.16

15.5.6.2 Datum feature

A datum feature is a feature of a part, such as an edge, surface, or a hole, which forms the basis for a datum or is used to establish its location (Fig. 15.17).

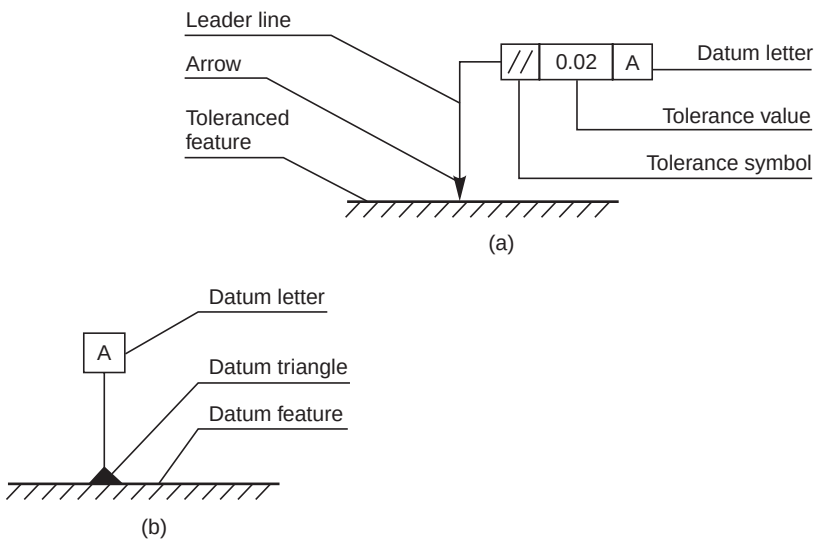

Fig. 15.17

15.5.6.3 Datum triangle

The datums are indicated by a leader line, terminating in a filled or an open triangle (Fig. 15.17).

15.5.6.4 Datum letter

To identify a datum for reference purposes, a capital letter is enclosed in a frame, connected to the datum triangle (Fig. 15.17).

The datum feature is the feature to which tolerance of orientation, position and run-out are related. Further, the form of a datum feature should be sufficiently accurate for its purpose and it may therefore be necessary in some cases to specify tolerances of form from the datum features.

Table 15.7 gives symbols, which represent the types of characteristics to be controlled by the tolerance.

www.EngineeringBooksPdf.com

15.5.7 Indicating Geometrical Tolerances on the Drawing

To eliminate the need for descriptive notes, geometrical tolerances are indicated on drawings by symbols, tolerances and datums, all contained in compartments of a rectangular frame, as shown in Fig. 15.17.

15.5.8 Indication of Feature Controlled

The feature controlled by geometrical tolerance is indicated by an arrowhead at the end of a leader line, from the tolerance frame.

Table 15.7 Symbols representing the characteristics to be toleranced

Characteristics to be toleranced		*Symbols*
Form of single features	Straightness	—
	Flatness	▱
	Circularity (roundness)	○
	Cylindricity	⌭
	Profile of any line	⌒
	Profile of any surface	⌓
Orientation of related features	Parallelism	//
	Perpendicularity (squareness)	⊥
	Angularity	∠
Position of related features	Position	⊕
	Concentricity and coaxiality	◎
	Symmetry	⌯
	Run-out	↗

The tolerance frame is connected to the tolerance feature by a leader line, terminating with an arrow in the following ways:

1. On the outline of the feature or extension of the outline, but not a dimension line, when the tolerance refers to the line or surface itself (Figs. 15.18 *a* to *c*), and
2. On the projection line, at the dimension line, when the tolerance refers to the axis or median plane of the part so dimensioned (Fig. 15.18 *d*) or on the axis, when the tolerance refers to the axis or median plane of all features common to that axis or median plane (Fig. 15.18 *e*).

www.EngineeringBooksPdf.com

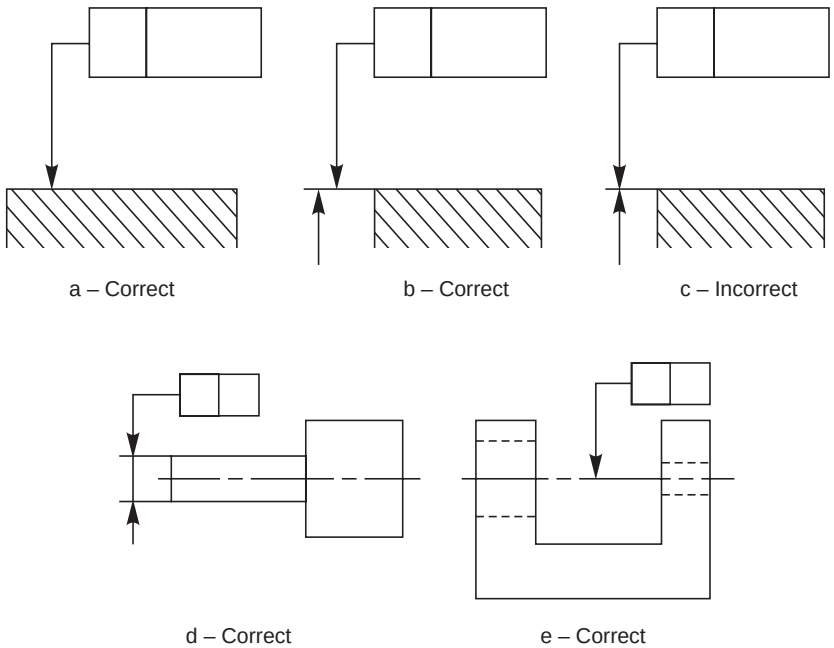

Fig. 15.18 Indication of feature controlled (outline or surface only)

15.5.9 Standards Followed in Industry

Comparison of systems of indication of tolerances of form and of position as per IS: 3000 (part-1)-1976 and as prevalent in industry are shown in Table 15.8.

Table 15.8 Systems of indication of tolerances of form and of position

As per the standard	*As prevalent in industry*
1. Straightness tolerance	
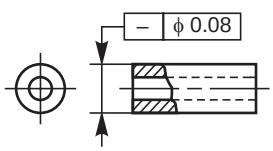	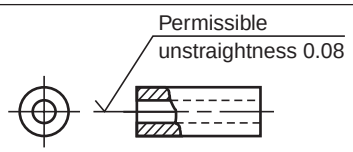
2. Flatness tolerance	
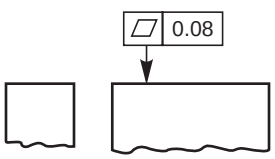	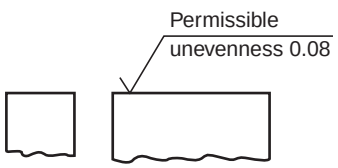
3. Circularity tolerance	
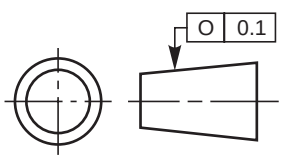	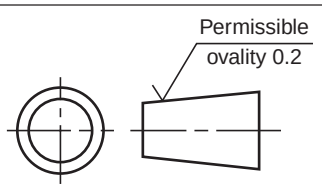

(Contd.)

www.EngineeringBooksPdf.com

4. Cylindricity tolerance	
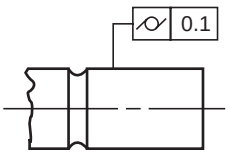	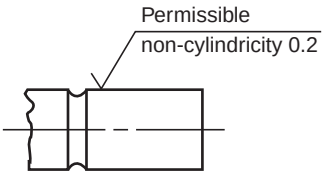
5. Parallelism tolerance	
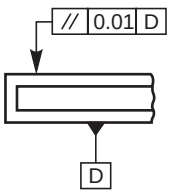	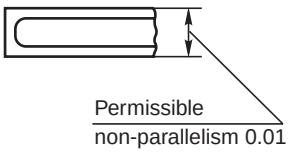
6. Perpendicularity tolerance	
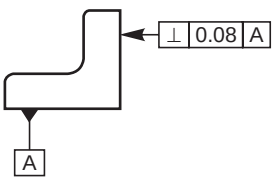	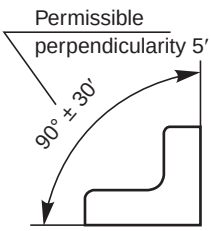
7. Angularity tolerance	
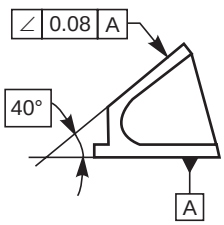	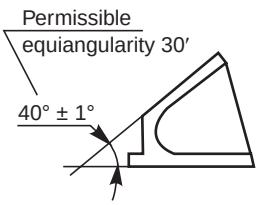
8. Concentricity and coaxiality tolerance	
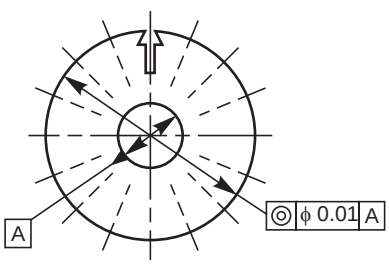	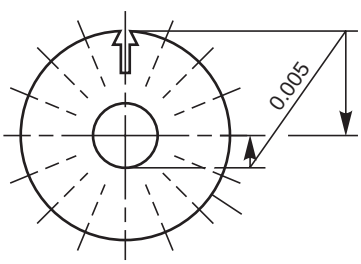

(Contd.)

www.EngineeringBooksPdf.com

9. Symmetry tolerance	
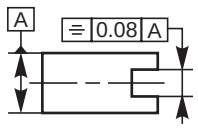	
10. Radial run-out	
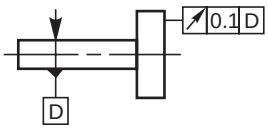	Permissible cross indicator runout (Between centres) 0.1 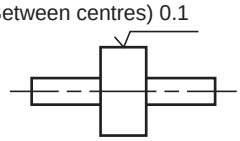
11. Axial run-out	
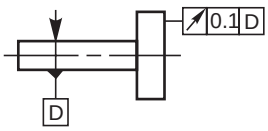	Permissible longitudinal indicator runout (Between centres) 0.1 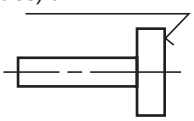

THEORY QUESTIONS

15.1 Define the terms: (*a*) basic size, (*b*) limits, (*c*) allowance, (*d*) tolerance and (*e*) deviation.

15.2 What is an unilateral tolerance and what is a bilateral tolerance?

15.3 What is fundamental tolerance and how tolerance is denoted?

15.4 What are the different methods used for placing limit dimensions?

15.5 What is meant by the term "fit" and how are fits classified?

15.6 Differentiate between clearance fit and transition fit.

15.7 Name the two systems that are in use for finding out limit dimensions.

15.8 Differentiate between hole basis system and shaft basis system.

15.9 When is a shaft basis system preferred to hole basis system?

15.10 What is meant by tolerance of (*a*) form and (*b*) position?

15.11 Explain the term tolerance zone with reference to the tolerance of form and position.

15.12 Define the following terms:

(*a*) datum, (*b*) datum feature, (*c*) datum triangle and (*d*) datum letter.

15.13 With the help of a sketch, show how geometrical tolerances are indicated on a drawing.

15.14 With the help of a sketch, show how the tolerance frame is connected to the feature controlled.

15.15 What are the various ways by which a tolerance frame is connected to the tolerance feature? Explain with the help of sketches.

15.16 With the help of sketches, show how the geometrical tolerances are indicated, as prevalent in industry, for the following cases:

(*a*) parallelism, (*b*) perpendicularity, (*c*) symmetry and (*d*) radial run out.

www.EngineeringBooksPdf.com

DRAWING EXERCISES

15.1 Calculate the maximum and minimum limits for both the shaft and hole in the following; using the tables for tolerances and name the type of fit obtained:

(*a*) 45H8/d7 (*b*) 180H7/n6 (*c*) 120H7/s6
(*d*) 40G7/h6 (*e*) 35 C11/h10

15.2 The dimensions of a shaft and a hole are given below:

Shaft, Basic size = 60mm and given as 60 – 0.020

Hole, Basic size = 60mm and given as 60 – 0.005

Find out:

(*a*) Tolerance of shaft (*b*) Tolerance of hole (*c*) Maximum allowance
(*d*) Minimum allowance (*e*) Type of fit

15.3 A schematic representation of basic size and its deviations are given in Fig. 15.19. Calculate the following in each case for a shaft of 50 mm basic size:

(*a*) Upper deviation (*b*) Lower deviation (*c*) Tolerance
(*d*) Upper limit size (*e*) Lower limit size

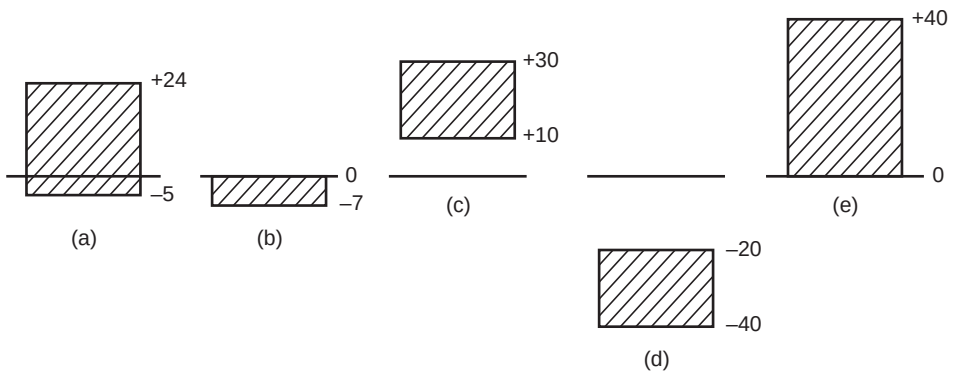

Fig. 15.19

15.4 A schematic representation of basic size and its deviations are given in Fig. 15.20. Identify them.

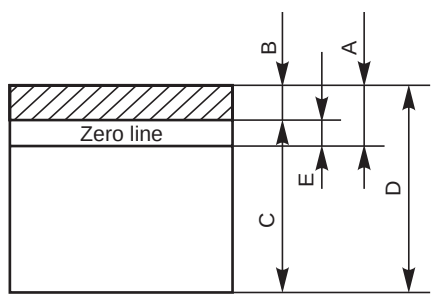

Fig. 15.20

15.5 A 30mm diameter hole is made on a turret lathe to the limits, 30.035 and 30.00. The following two grades of shafts are used to fit in the hole:

(*a*) ϕ29.955mm and 29.925mm, and (*b*) ϕ30.055mm and 30.050mm.

Calculate the maximum tolerance, clearance and indicate the type of fit in each case by a sketch.

www.EngineeringBooksPdf.com

15.6 Compute the limit dimensions for a clearance fit on the hole basis system, for a basic size of 40 mm diameter, with a minimum clearance of 0.05 mm; with the tolerance on the hole being 0.021 and the tolerance on the shaft being 0.15 mm.

15.7 Find the limit dimensions for an interference fit on the shaft basis system for the above problem and compare the dimensions of the shaft and hole.

15.8 Determine the type of fit and calculate the clearance and or interference for the schematic tolerance zones shown in Fig. 15.21.

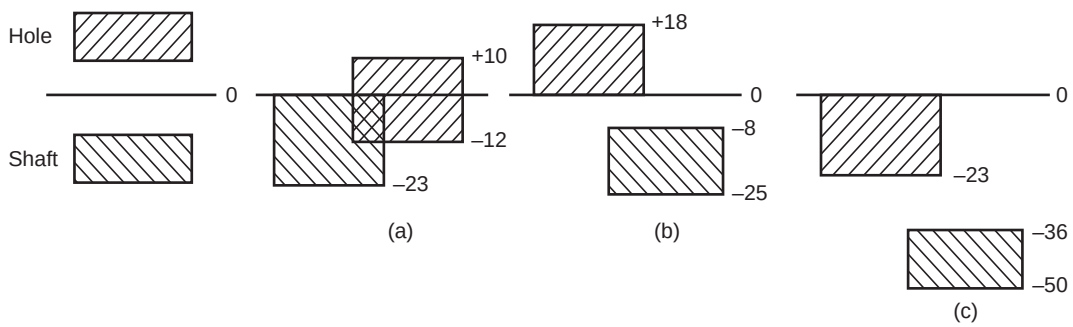

Fig. 15.21

15.9 Suggest suitable fits and their letter and tolerance grades for the components shown in Fig. 15.22.

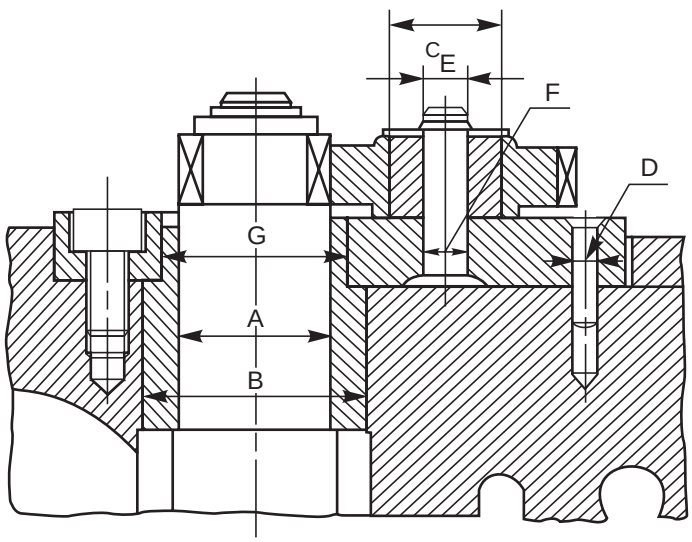

A – Shaft rotating in bush
B – Bush fixed in housing
C – Bush is secured on to the gear
D – Base plate of the gear unit is secured on to the casting by cylindrical pin
E – Gear with the bush rotating on to the pin
F – Pin is secured on to the base plate
G – Bush with plate

Fig. 15.22

www.EngineeringBooksPdf.com

15.10 Indicate two methods of showing the top surface of the component as the datum (Fig. 15.23).

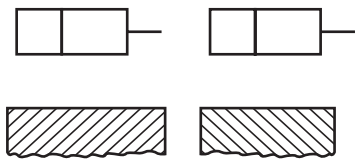

Fig. 15.23

15.11 By means of neat sketches and explanatory notes, interpret the meaning of the geometrical tolerances shown in Fig. 15.24.

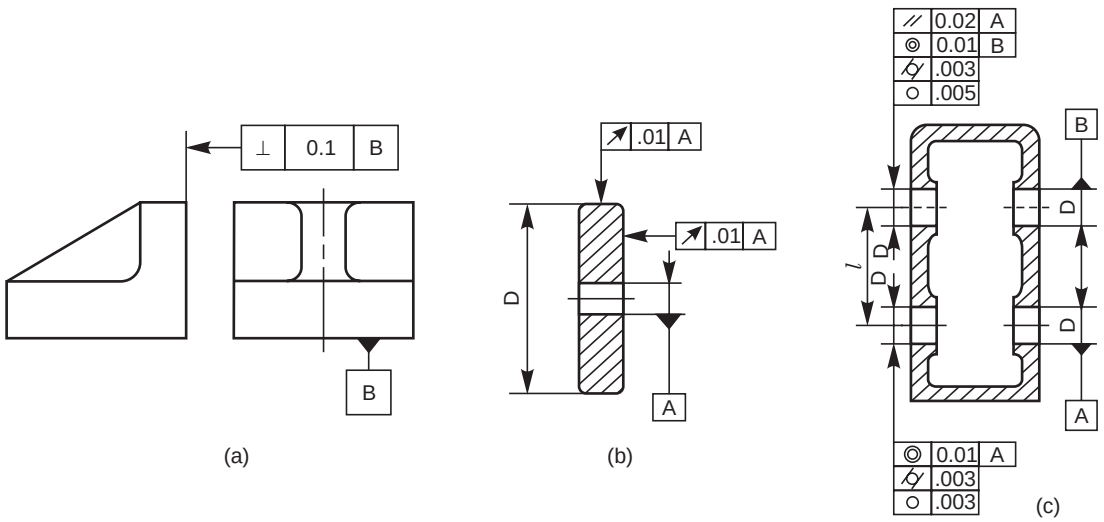

Fig. 15.24

15.12 Complete the tolerance frames in Fig. 15.25 to satisfy the conditions required in each case:

(*a*) the axis of the whole component is required to be contained in a cylindrical zone of 0.04 mm diameter.

(*b*) the top surface has to be parallel to the hole, within a tolerance of 0.08 mm.

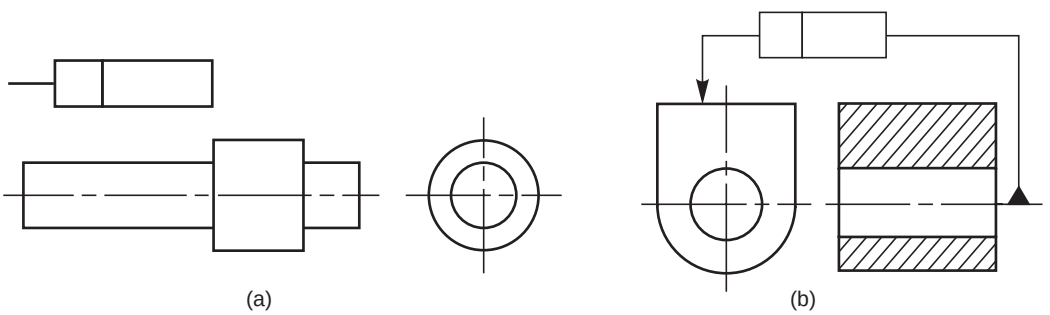

Fig. 15.25

www.EngineeringBooksPdf.com

15.13 Explain the meaning of the geometrical tolerances indicated in microns, for the machine tool components shown in Fig. 15.26.

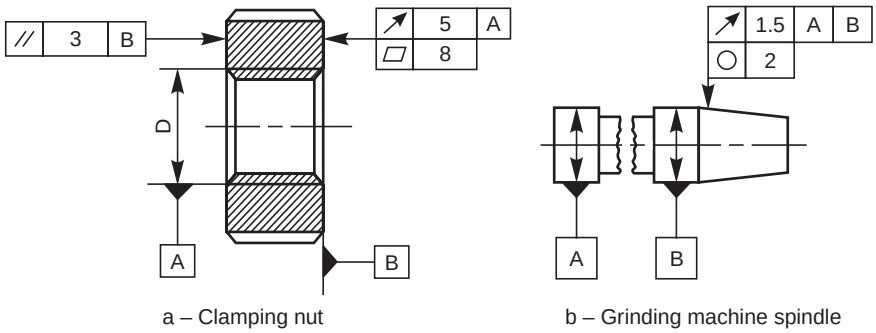

Fig. 15.26

www.EngineeringBooksPdf.com

SURFACE ROUGHNESS 16

16.1 INTRODUCTION

It is not possible to achieve in practice, a geometrically ideal surface of a component and hence, production drawings of components must also contain information about the permissible surface conditions. Machine components which have undergone machining operation, when inspected under magnification, will have some minute irregularities. The actual surface condition will depend upon the finishing process adopted.

The properties and performance of machine components are affected by the degree of roughness of the various surfaces. The higher the smoothness of the surface, the better is the fatigue strength and corrosion resistance. Friction between mating parts is also reduced due to better surface finish.

16.2 SURFACE ROUGHNESS

The geometrical characteristics of a surface include,

1. Macro-deviations,
2. Surface waviness, and
3. Micro-irregularities.

The surface roughness is evaluated by the height, R_t and mean roughness index R_a of the micro-irregularities. Following are the definitions of the terms indicated in Fig. 16.1:

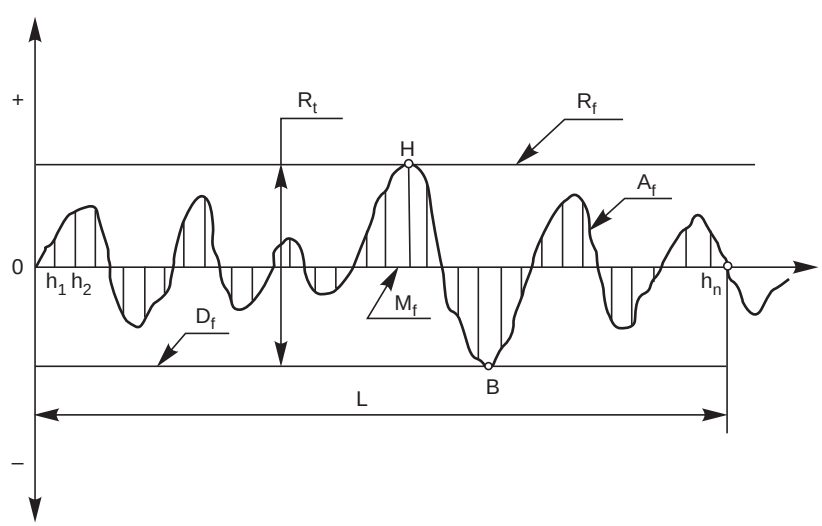

Fig. 16.1

www.EngineeringBooksPdf.com

16.2.1 Actual Profile, A_f

It is the profile of the actual surface obtained by finishing operation.

16.2.2 Reference Profile, R_f

It is the profile to which the irregularities of the surface are referred to. It passes through the highest point of the actual profile.

16.2.3 Datum Profile, D_f

It is the profile, parallel to the reference profile. It passes through the lowest point B of the actual profile.

16.2.4 Mean Profile, M_f

It is that profile, within the sampling length chosen (L), such that the sum of the material-filled areas enclosed above it by the actual profile is equal to the sum of the material-void areas enclosed below it by the profile.

16.2.5 Peak-to-valley Height, R_t

It is the distance from the datum profile to the reference profile.

16.2.6 Mean Roughness Index, R_a

It is the arithmetic mean of the absolute values of the heights h_i between the actual and mean profiles. It is given by,

$$R_a = 1/L \int_{x=0}^{x=L} |h_i|\, dx \text{ , where } L \text{ is the sampling length}$$

16.2.7 Surface Roughness Number

The surface roughness number represents the average departure of the surface from perfection over a prescribed sampling length, usually selected as 0.8 mm and is expressed in microns. The measurements are usually made along a line, running at right angle to the general direction of tool marks on the surface. Surface roughness values are usually expressed as the R_a value in microns, which are determined from (Fig. 16.1),

$$R_a = \frac{h_1 + h_2 + h_3 + \ldots + h_n}{n}$$

The surface roughness may be measured, using any one of the following :

1. Straight edge
2. Surface guage
3. Optical flat
4. Tool maker's microscope
5. Profilometer
6. Profilograph
7. Talysurf

Table 16.1 shows the surface roughness expected from various manufacturing processes.

www.EngineeringBooksPdf.com

Table 16.1 Surface roughness expected from various manufacturing processes

Sl. No.	Manufacturing Process	R_a in μm (0.012, 0.025, 0.050, 0.10, 0.20, 0.40, 0.80, 1.6, 3.2, 6.3, 12.5, 25, 50, 100, 200)
1	Sand casting	5 – 50
2	Permanent mould casting	0.8 – 6.3
3	Die casting	0.8 – 3.2
4	High pressure casting	0.32 – 2
5	Hot rolling	2.5 – 50
6	Forging	1.6 – 28
7	Extrusion	0.16 – 5
8	Flame cutting, sawing & Chipping	6.3 – 100
9	Radial cut-off sawing	1 – 6.3
10	Hand grinding	6.3 – 25
11	Disc grinding	1.6 – 25
12	Filing	0.25 – 25
13	Planing	1.6 – 50
14	Shaping	1.6 – 25
15	Drilling	1.6 – 20
16	Turning & Milling	0.32 – 25
17	Boring	0.4 – 6.3
18	Reaming	0.4 – 3.2
19	Broaching	0.4 – 3.2
20	Hobbing	0.4 – 3.2
21	Surface grinding	0.063 – 5
22	Cylindrical grinding	0.063 – 5
23	Honing	0.025 – 0.4
24	Lapping	0.012 – 0.16
25	Polishing	0.04 – 0.16
26	Burnishing	0.04 – 0.8
27	Super finishing	0.016 – 0.32

www.EngineeringBooksPdf.com

16.3 MACHINING SYMBOLS

This article deals with the symbols and other additional indications of surface texture, to be indicated on production drawings.

The basic symbol consists of two legs of unequal length, inclined at approximately 60° to the line, representing the surface considered (Fig. 16.2*a*). This symbol may be used where it is necessary to indicate that the surface is machined, without indicating the grade of roughness or the process to be used.

If the removal of material is not permitted, a circle is added to the basic symbol, as shown in Fig. 16.2*b*. This symbol may also be used in a drawing, relating to a production process, to indicate that a surface is to be left in the state, resulting from a preceding manufacturing process, whether this state was achieved by removal of material or otherwise. If the removal of material by machining is required, a bar is added to the basic symbol, as shown in Fig. 16.2*c*. When special surface characteristics have to be indicated, a line is added to the longer arm of the basic symbol, as shown in Fig. 16.2*d*.

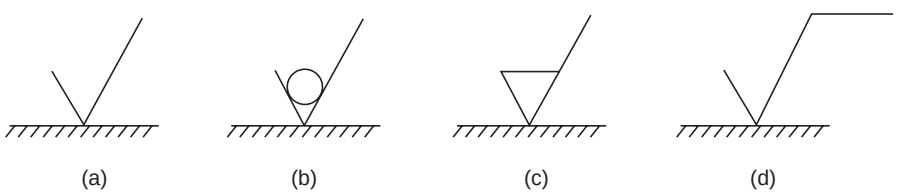

Fig. 16.2

16.4 INDICATION OF SURFACE ROUGHNESS

The value or values, defining the principal criterion of roughness, are added to the symbol as shown in Fig. 16.3.

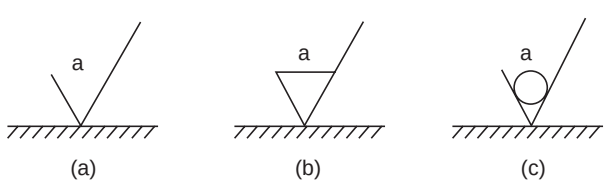

Fig. 16.3

A surface texture specified,

as in Fig. 16.3*a*, may be obtained by any production method.

as in Fig. 16.3*b*, must be obtained by removal of material by machining.

as in Fig. 16.3*c*, must be obtained without removal of material.

When only one value is specified to indicate surface roughness, it represents the maximum permissible value. If it is necessary to impose maximum and minimum limits of surface roughness, both the values should be shown, with the maximum limit, a_1, above the minimum limit, a_2 (Fig. 16.4*a*).

www.EngineeringBooksPdf.com

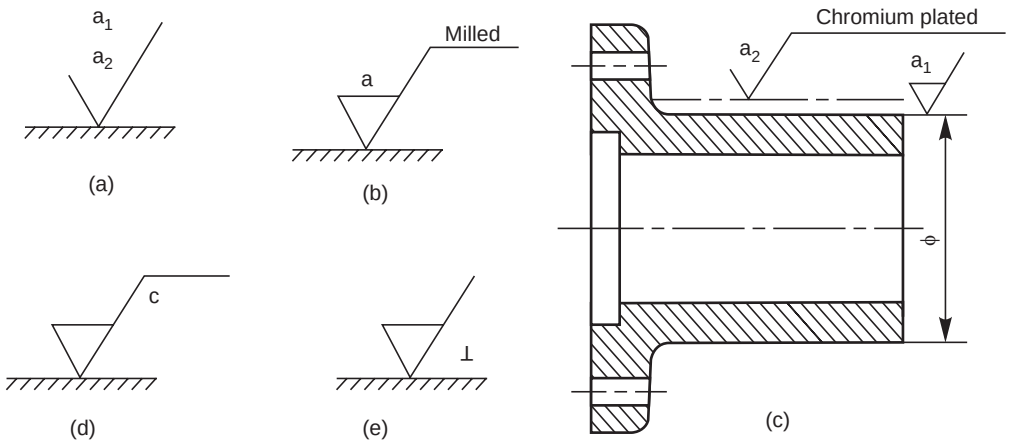

Fig. 16.4

The principal criterion of surface roughness, R_a may be indicated by the corresponding roughness grade number, as shown in Table 16.2.

Table 16.2 Equivalent surface roughness symbols

Roughness values R_a *µm*	*Roughness grade number*	*Roughness grade symbol*
50	N12	∼
25	N11	▽
12.5	N10	
6.3	N9	▽▽
3.2	N8	
1.6	N7	
0.8	N6	▽▽▽
0.4	N5	
0.2	N4	
0.1	N3	▽▽▽▽
0.05	N2	
0.025	N1	

16.4.1 Indication of Special Surface Roughness Characteristics

In certain circumstances, for functional reasons, it may be necessary to specify additional special requirements, concerning surface roughness.

If it is required that the final surface texture be produced by one particular production method, this method should be indicated on an extension of the longer arm of the symbol as shown in Fig. 16.4*b*. Also, any indications relating to treatment of coating may be given on the extension of the longer arm of the symbol.

Unless otherwise stated, the numerical value of the roughness, applies to the surface roughness after treatment or coating. If it is necessary to define surface texture, both before and after treatment, this should be explained by a suitable note or as shown in Fig. 16.4*c*.

www.EngineeringBooksPdf.com

If it is necessary to indicate the sampling length, it should be selected from the series given in ISO/R 468 and be stated adjacent to the symbol, as shown in Fig. 16.4*d*. If it is necessary to control the direction of lay, it is specified by a symbol added to the surface roughness symbol, as shown in Fig. 16.4*e*.

NOTE The direction of lay is the direction of the predominant surface pattern, ordinarily determined by the production method employed.

Table 16.3 shows the symbols which specify the common directions of lay.

Table 16.3 Symbols specifying the directions of lay

Symbol	*Interpretation*	
=	Parallel to the plane of projection of the view in which the symbol is used	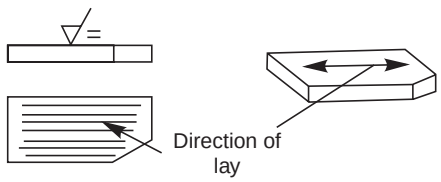
⊥	Perpendicular to the plane of projection of the view in which the symbol is used	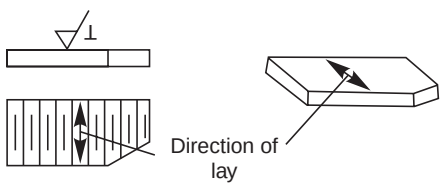
X	Crossed in two slant directions relative to the plane of projection of the view in which the symbol is used	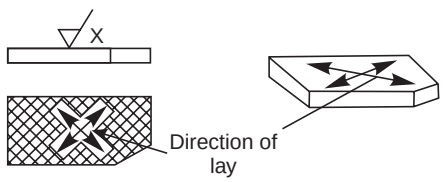
M	Multi-directional	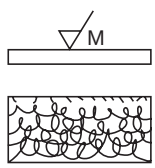
C	Approximately circular, relative to the centre of the surface to which the symbol is applied	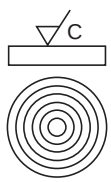
R	Approximately radial, relative to the centre of the surface to which the symbol is applied	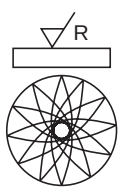

www.EngineeringBooksPdf.com

16.4.2 Indication of Machining Allowance

When it is necessary to specify the value of the machining allowance, this should be indicated on the left of the symbol, as shown in Fig. 16.5*a*. This value is expressed normally in millimetres.

Figure 16.5*b* shows the various specifications of surface roughness, placed relative to the symbol.

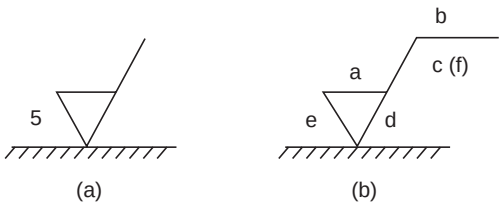

Fig. 16.5

16.4.3 Indications of Surface Roughness Symbols on Drawings

The symbol and the inscriptions should be so oriented, that they may be read from the bottom or the right hand side of the drawing (Fig. 16.6*a*). If it is not practicable to adopt this general rule, the symbol may be drawn in any position (Fig. 16.6*b*), provided that it does not carry any indications of special surface texture characteristics.

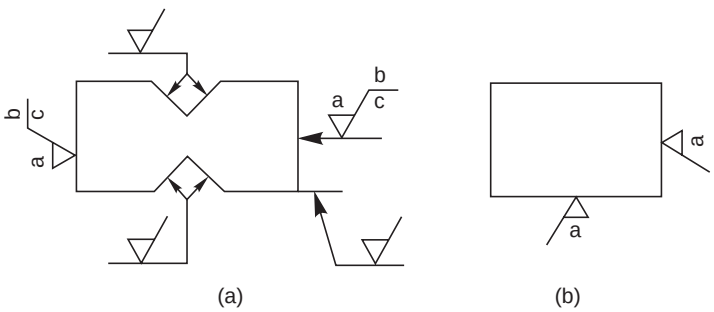

Fig. 16.6

The symbol may be connected to the surface by a leader line, terminating in an arrow. The symbol or the arrow should point from outside the material of the piece, either to the line representing the surface, or to an extension of it (Fig. 16.6*a*)

In accordance with the general principles of dimensioning, the symbol is only used once for a given surface and, if possible, on the view which carries the dimension, defining the size or position of the surface (Fig. 16.7).

If the same surface roughness is required on all the surfaces of a part, it is specified, either by a note near a view of the part (Fig. 16.8), near the title block, or in the space devoted to general notes, or following the part number on the drawing.

If the same surface roughness is required on the majority of the surfaces of a part, it is specified with the addition of, the notation, except where otherwise stated (Fig. 16.9*a*), or a basic symbol (in brackets) without any other indication (Fig. 16.9*b*), or the symbol or symbols (in brackets) of the special surface roughness or roughnesses (Fig. 16.9*c*).

www.EngineeringBooksPdf.com

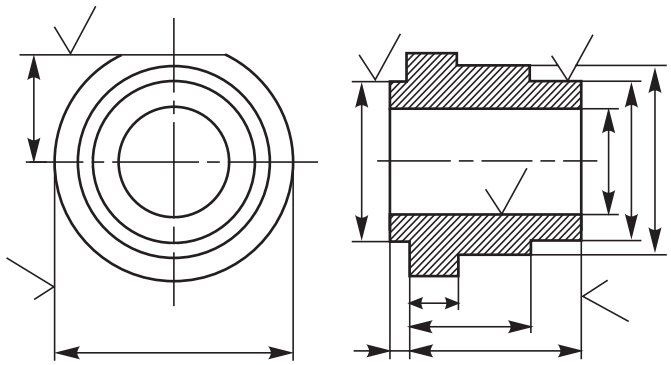

Fig. 16.7

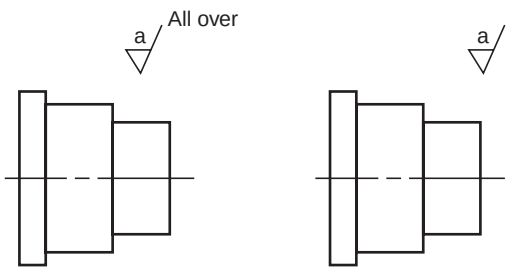

Fig. 16.8

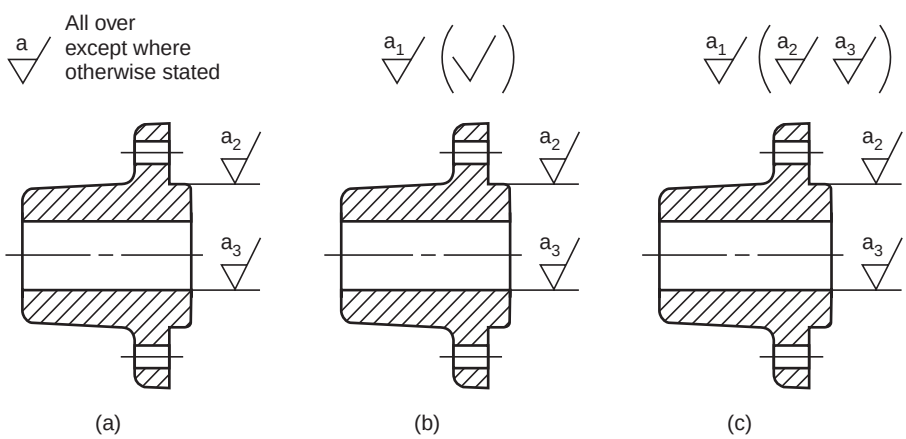

Fig. 16.9

To avoid the necessity of repeating a complicated specification a number of times, or where space is limited, a simplified specification may be used on the surface, provided that its meaning is explained near the drawing of the part, near the title block or in the space devoted to general notes (Fig. 16.10).

www.EngineeringBooksPdf.com

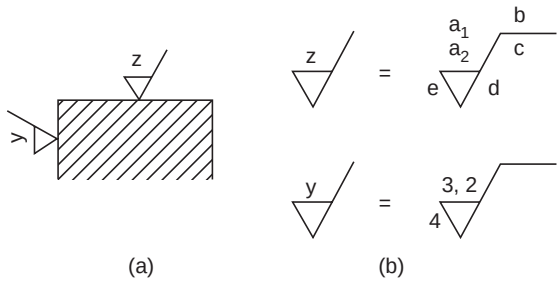

Fig. 16.10

THEORY QUESTIONS

16.1 What is the importance of surface roughness ?

16.2 Mention the geometrical characteristics of a surface.

16.3 Define the following terms :

(*a*) reference profile, (*b*) datum profile,

(*c*) mean roughness index (*d*) surface roughness number.

16.4 What are the various means that are used to determine the surface roughness value ?

16.5 How surface roughness values are indicated on a drawing ?

16.6 Indicate how various surface roughness specifications are placed relative to the symbol.

16.7 Indicate roughness grade symbols for the following roughness grade numbers :

(*a*) N 12 (*b*) N 10 (*c*) N 8

(*d*) N 6 (*e*) N 2

16.8 What is meant by direction of lay? How is it shown on a drawing ? Sketch the symbols related to the common directions of lay.

DRAWING EXERCISES

16.1 Indicate the roughness grade symbols used in shop floor practice, with their range of roughness values.

16.2 What are the roughness values that can be normally obtained by (*a*) fine turning, (*b*) machine reaming, (*c*) milling, (*d*) precision grinding and (*e*) chrome plating.

16.3 Show how the roughness is indicated on the component for the following situations.

(*a*) surface to be obtained by any production method,

(*b*) surface to be obtained without removal of material

(*c*) surface to be coated, and

(*d*) surface to be given a machining allowance.

16.4 With examples, show the method of indicating surface roughness on the following components :

(*a*) symmetrical surfaces requiring the same quality,

(*b*) cylindrical part, and (*c*) same surface quality all over.

16.5 Suggest suitable surface finish values and the process of obtaining them for the following components :

(*a*) precision drill sleeve, (*b*) grade 1 milling machine column guide-ways,

(*c*) splines on a shaft, (*d*) faces of a milling arbor spacer, and

(*e*) precision lathe bed guide-ways.

www.EngineeringBooksPdf.com

BLUEPRINT READING 17

17.1 INTRODUCTION

In many ways, learning to read a drawing is the same as learning to read a language. Blueprint is the common name of the copies taken from an original drawing, usually drawn on a tracing paper. The copies may be obtained by way of reprographic processes, *viz*., blueprinting, ammonia printing, xerox copying, copy of a photo film, etc., but the colour of the print has nothing to do with the name "blueprint".

For blueprint reading and understanding the drawing, one must have a thorough knowledge of the principles of drawing and orthographic projections. The knowledge of various manufacturing processes and the sequence of operations required to obtain the finished shape, intended by the designer, also helps in interpreting the drawings.

In this chapter, the examples chosen help providing guidelines to enable students to understand the shape and size of a component, in the case of component drawings, and also its location, in the case of assembly drawings. While reading the drawings, the details such as shape, size, through dimensions, notes and material to be used, and additional notes to the workman on machining, surface finish, tolerances, etc., are to be noted carefully.

17.2 EXAMPLES

17.2.1 Rear Tool Post

Rear tool post is generally used on capstan lathes, mainly for parting-off operations. It is fixed on the cross-slide in the slots, provided at the rear side of the lathe. Study the drawing shown in Fig. 17.1 and answer the following :

1. What is the overall size of the tool post?
   — 102mm × 70mm × 62mm
2. How many bolts are provided for fixing the tool, and what is the size of each bolt?
   —3, M10
3. What type of tool can be used with it?
   — Parting tool
4. What is the maximum height of the tool holder?
   — 25mm
5. How many screws are provided to locate the tool?
   — 2
6. How is the tool holder fixed to the cross slide?
   — By 2 Nos. of M6 Hex. socket headed set screws

www.EngineeringBooksPdf.com

7. What is the purpose of the threaded hole marked 'X'?
   — For adjusting the tool height, by means of a screw
8. Explain the note—4 HOLES, M10.
   —There are three tapped holes in the body to clamp the tool in position by screws and the fourth tapped hole is at the bottom of the base. The size of the tap is 10mm.

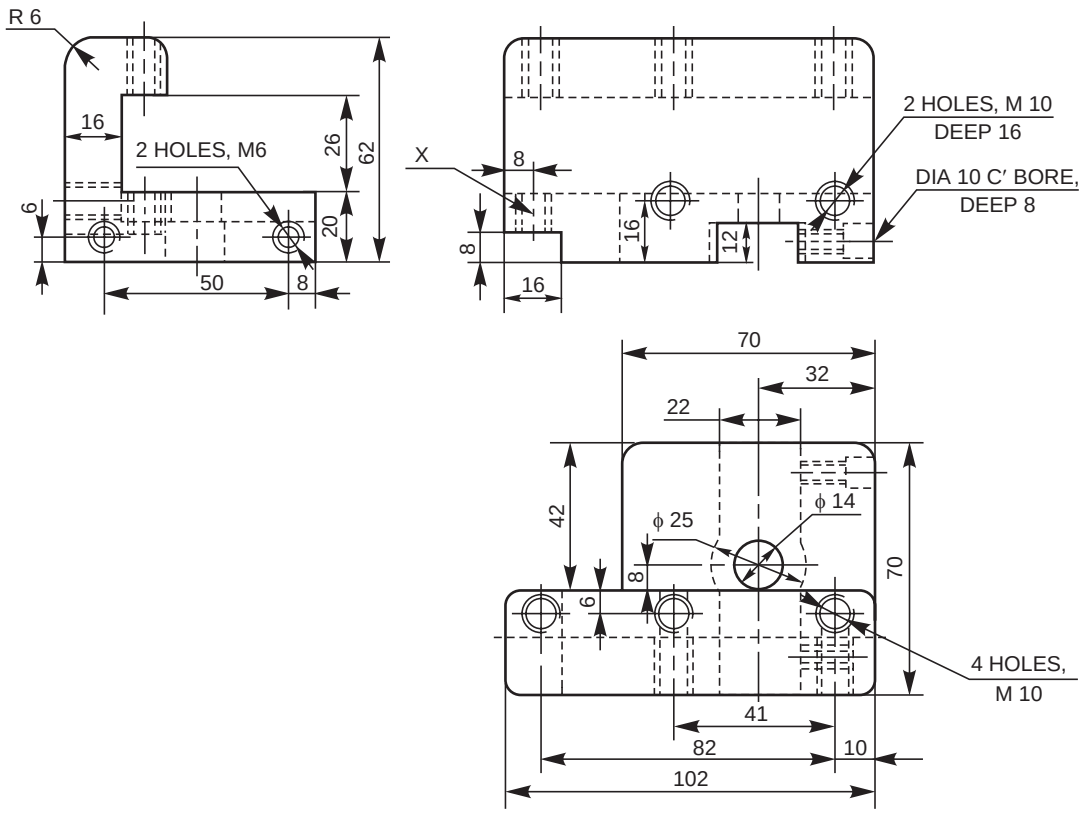

Fig. 17.1 Rear tool post

17.2.2 Pump Housing

The view from the front and the view from above of a pump housing is shown in Fig. 17.2. Read the drawing and answer the following :

1. What is the overall size of the housing?
   —178mm × 152mm × 102mm
2. What is the gasket size required for the top surface?
   —134mm × 95mm
3. There are 4 tapped holes on the top. What is the size of the tap?
   —M6
4. Specify the location of the holes on the front face.
   —2 HOLES, M10 DEEP 25 AT 120 PCD
5. Explain the note—4 HOLES, M10 DEEP 25.
   —There are two holes in the front and two more holes similarly placed at the back, each having a thread of nominal diameter of 10mm and depth of 25mm.

www.EngineeringBooksPdf.com

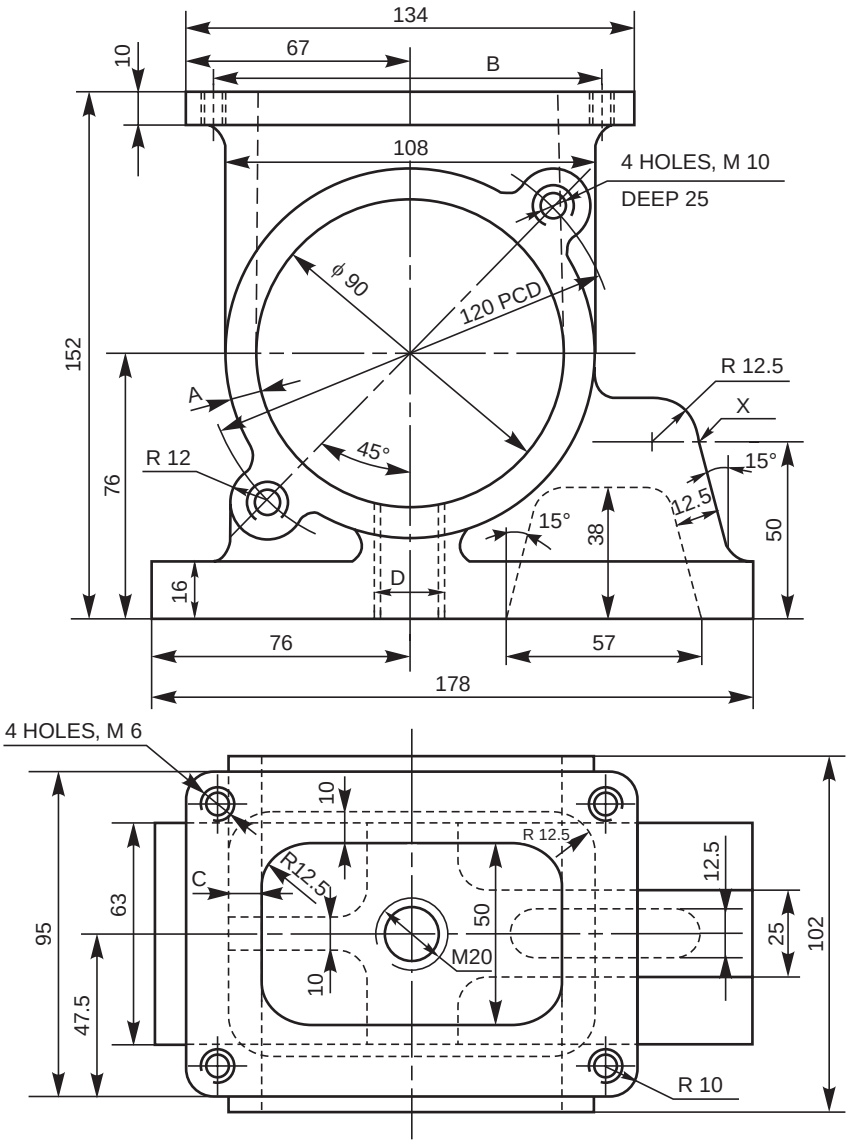

Fig. 17.2 Pump housing

6. What is the size of the opening at the top?
   —89mm × 50mm
7. What is the diameter of the gasket required for the front cover?
   —144 mm
8. What is the corner radius of the top flange?
   —R 10
9. Locate the centre point of tapped holes M 6.
   —10mm × 10mm from the flange edges at each corner
10. Find the dimensions A, B, C and D.
    —A = 9.5mm, B = 114mm, C = 9.5mm and D = 20mm

www.EngineeringBooksPdf.com

11. What is the slope of the recess in the housing base?
    —15°
12. What are the other dimensions of the recess?
    —57mm × 12.5mm × 38mm
13. What is the width and thickness of the base?
    —63mm × 16mm
14. What is the width of the rib marked 'X'?
    —25 mm

17.2.3 Gear Box Cover

Study the two orthographic views and the local sections of the gear box cover shown in Fig. 17.3 and answer the following :

1. How is the cover fixed to the gear box?
   — By means of 6 screws
2. What is the size of the thread?
   —M 10
3. What is the thread size 'A' shown in the view from the front?
   —M 20
4. What are the values of the dimensions B, C, D and E in the view from the front?
   —B = ϕ 21, C = ϕ 18, D = 6 mm, and E = 34 mm
5. What is the thickness of the cover at section B-B?
   —6 mm
6. What will be the gasket size, if required?
   —262mm × 124mm
7. How many tapped holes are there on the side opening of the cover and what is the size?
   —4, M 6
8. What is the material and method of manufacture suggested for the cover?
   —Cast iron, CO_2 sand casting
9. What are the dimensions of F, G and H marked in the view from above.
   —F = 24 mm, G = R 9 and H = R 10
10. What is the maximum height of the cover?
    —90 mm
11. What is the wall thickness of the cover and the fillet radius where no size is mentioned?
    —Thickness = 6 mm, fillet radius = 3 mm

17.2.4 Steam Stop Valve

A steam stop valve is mounted on the steam pipe, close to the engine to regulate the flow of steam through pipes and shut-off completely when not required. It is operated by means of a hand wheel. These valves have a low lift and hence can be closed and opened quickly.

Figure 17.4 shows the sectional view of an assembly drawing of a steam stop valve. The hand wheel (5) which operates the valve (2) is fitted on to the spindle (4). The spindle is screwed into the bush (6) which is fixed to the bridge (7) by two countersunk screws (8). The bridge is

www.EngineeringBooksPdf.com

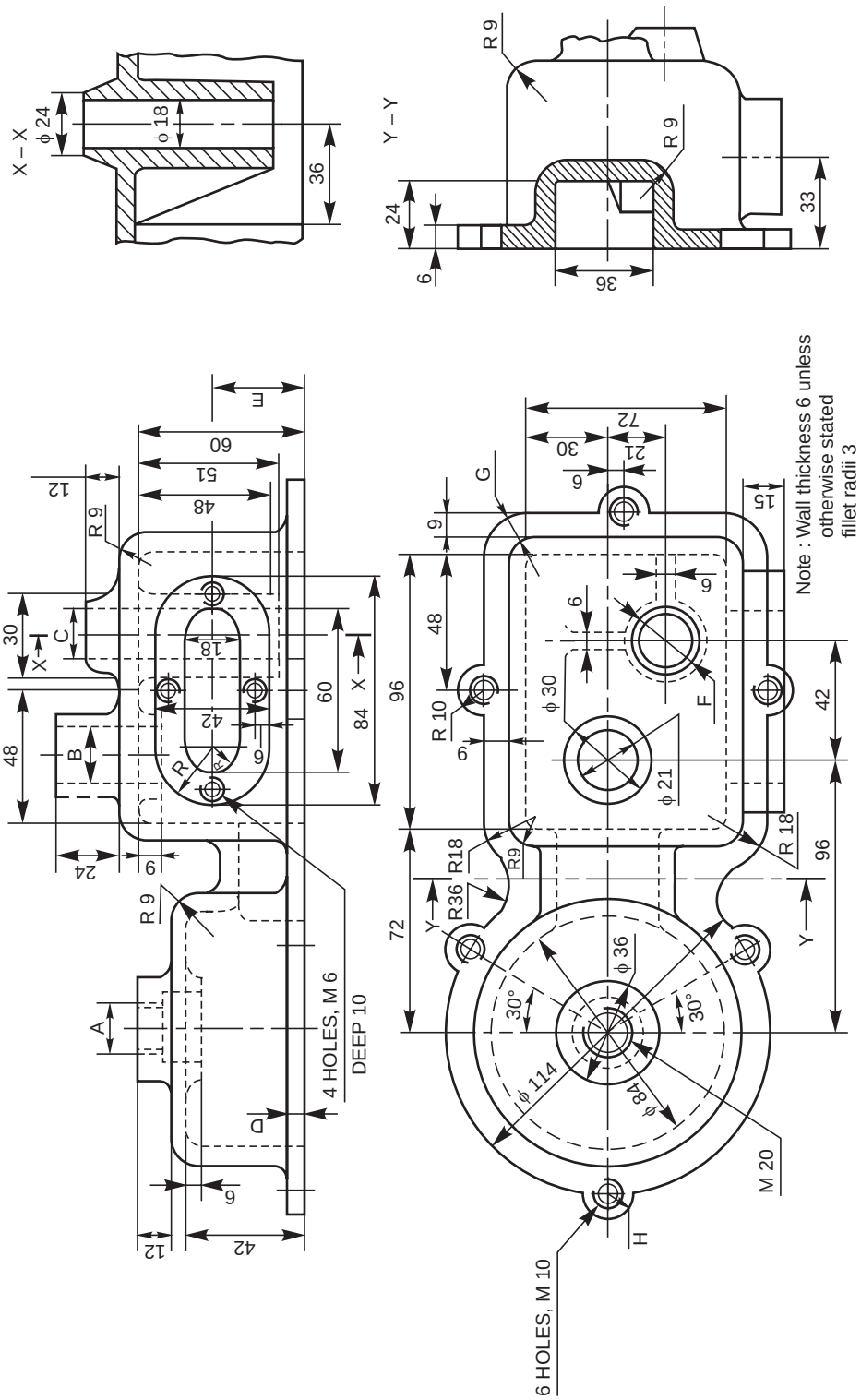

Fig. 17.3 Gear box cover

www.EngineeringBooksPdf.com

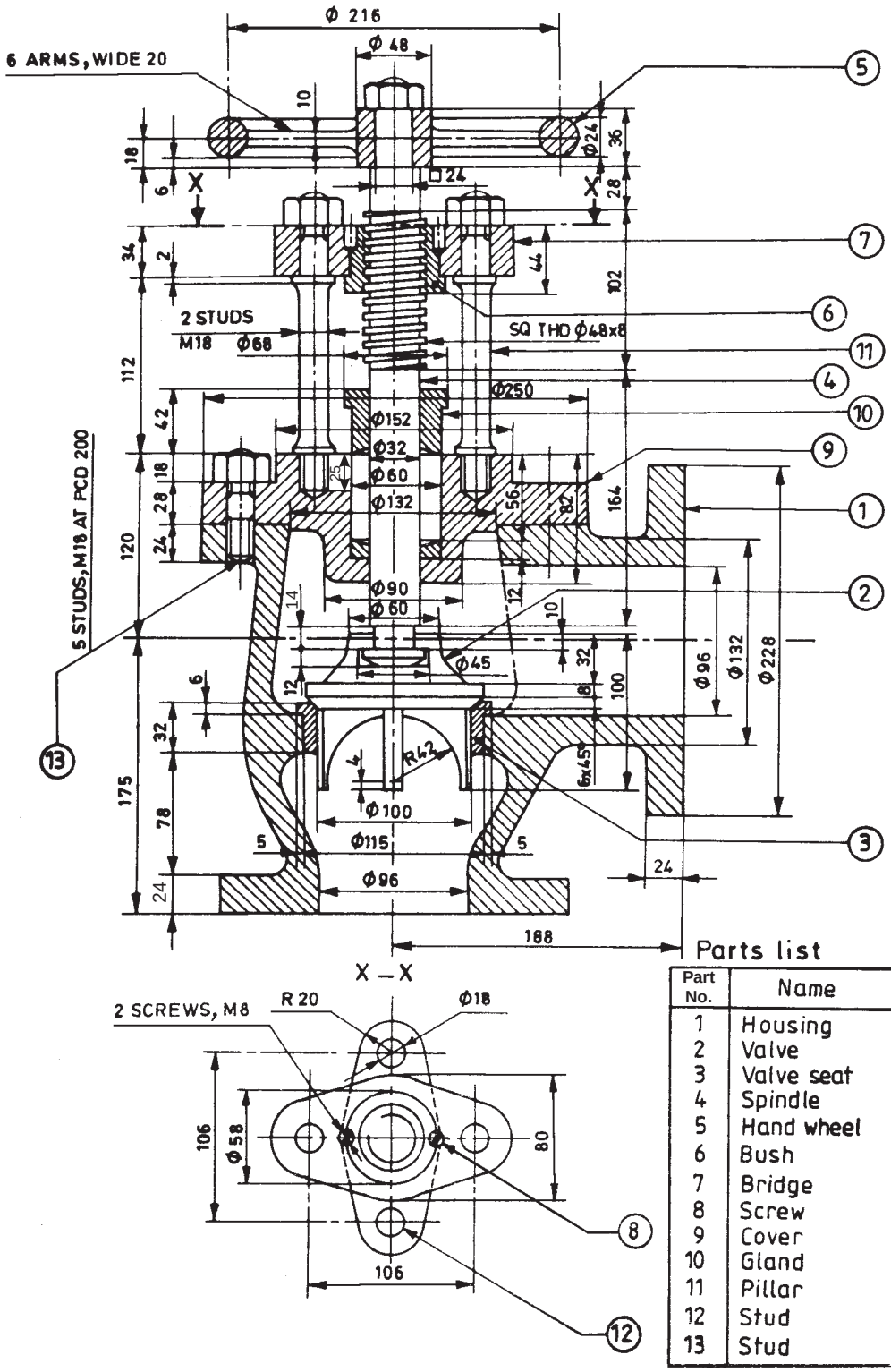

Parts list

Part No.	Name
1	Housing
2	Valve
3	Valve seat
4	Spindle
5	Hand wheel
6	Bush
7	Bridge
8	Screw
9	Cover
10	Gland
11	Pillar
12	Stud
13	Stud

Fig. 17.4 Steam stop valve

www.EngineeringBooksPdf.com

connected to the cover (9) by two pillars (11). The bottom end of the spindle is connected to the valve in such a way that it transmits vertical motion but not the rotational one.

The steam passage is completely closed when the valve is in its bottom most position, but as it is lifted, the passage slowly increases. Thus, steam regulation is achieved. The gland (10), which is secured to the cover (9) with two studs (12), prevents steam leakage through the cover. The stop valve is connected to the steam pipe, through flanges provided in the housing (1).

Read the assembly drawing and answer the following :

1. What is the material of the spindle and what is its thread specification?
   —Mild steel, square thread: SQ40 × 8 mm
2. What is the total length of the spindle?
   —374 mm
3. What is the thread size of the studs (13)?
   — M 18
4. What is the material of the gland? And what is its bore and height?
   —Bronze, Bore-ϕ 32, Height-42 mm
5. What are the flange bore and outside diameter?
   —ϕ 96 and ϕ 228
6. What is the size of the hand wheel and its arm thickness?
   —ϕ 240, 10 mm
7. What is the size of the spindle, where the hand wheel is fitted?
   —SQ 24 mm
8. What is the pitch of the spindle thread and the depth?
   —8 mm and 4 mm
9. What is the size of the slot in the valve that fits on to the spindle?
   —ϕ 45 × 12 mm
10. What is the taper on the valve seat?
    —45°
11. What is the height of the stud nut?
    —18 mm
12. Wht is the length of the stud (13)?
    —70 mm
13. What is the thickness of the valve flange?
    —24 mm
14. How many studs are there to fix the cover (9) and how they are located?
    —5 Nos. at 200 PCD
15. What is the bush height?
    —44 mm

17.3 EXERCISES

17.3.1 Worm Gear Housing

The orthographic views of a worm gear casing are shown in Fig. 17.5. Read the drawing and answer the following:

www.EngineeringBooksPdf.com

1. What is the centre distance between the worm and worm wheel?
2. What is the screw size used to fix the gear shaft in position?
3. What is the thickness of the worm wheel casing?
4. Find the dimensions of A, B, C, D and E, marked in the view from the front.
5. Find the dimensions of F, G and H, marked in the view from the left.
6. What is the approximate overall size of the casing?
7. What is the size of the fillet radius?

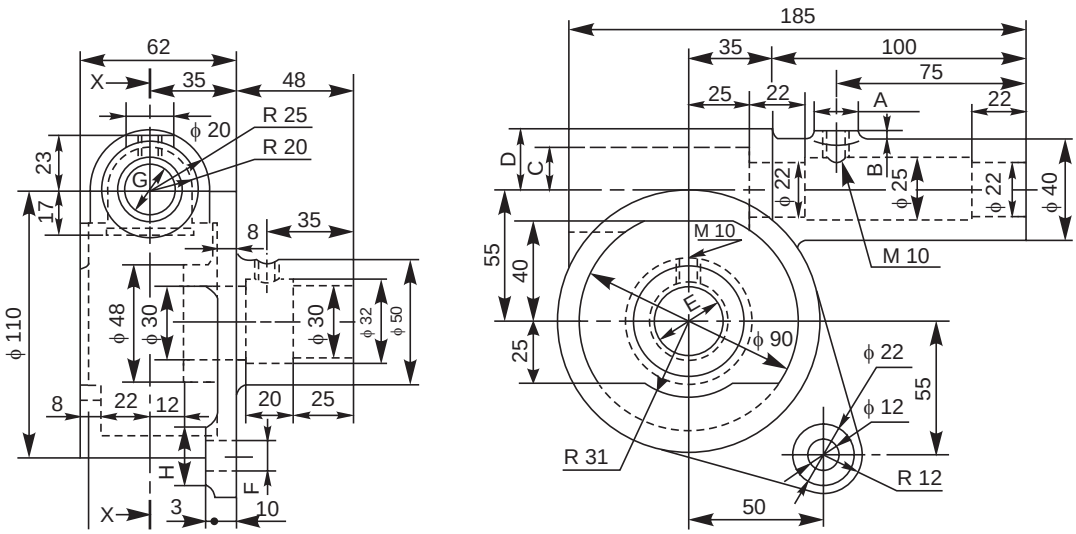

Fig. 17.5 Worm gear housing

17.3.2 Connector

The working drawing of a connector is shown in Fig. 17.6. Study the drawing and answer the following:

1. What is the significance of the length of the connector 165 mm, shown within the brackets?
2. What is the size of the knurled portion of the component?
3. What is the size of the keyweay?
4. Specify the taper.
5. Specify the threads on the component.
6. What is the depth of the drilled hole?
7. What is the counterbore specification at the internal thread opening?
8. What is the purpose of the groove marked 'X' and its enlarged view shown?
9. Explain the note 4HOLES, DIA6.
10. Where are the holes drilled?
11. What is the meaning of 4 × 45°?
12. How is the keyway cut?
13. Explain the meaning of the surface finish symbol shown.

www.EngineeringBooksPdf.com

14. Explain the note at × (5 : 1).
15. Explain the linear and angular tolerances provided.
16. Explain ϕ 50 *f* 7.
17. What type of tolerance is given on ϕ 16?
18. Explain SR 5.
19. What is the length of the internal thread?

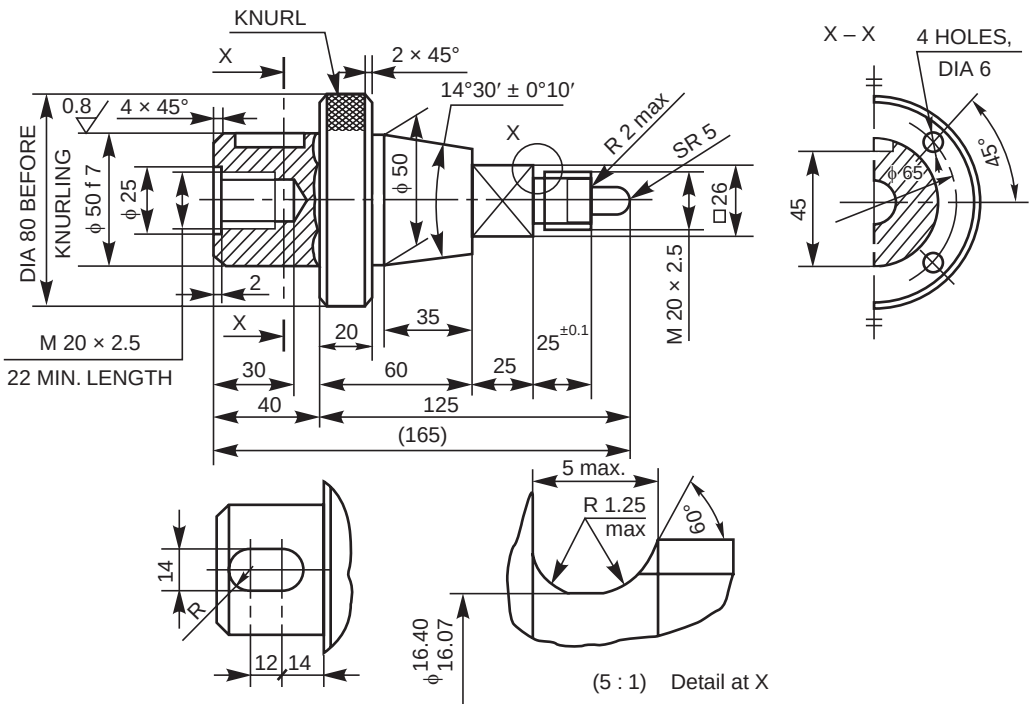

Fig. 17.6 Connector

17.3.3 Square Tool Post

The assembled views of a four way tool post are shown in Fig. 17.7. Study the drawing and answer the following :

1. How is the tool post fixed on the compound slide?
2. What is the size of the square tool post body?
3. What is the maximum size of the tool or tool holder that can be fixed in the tool post?
4. How many tools can be fixed in the tool post?
5. How is the tool indexed and the tool post clamped?
6. What is the fit between the body (1) and stud (6)?
7. What is the thread size on the stud?
8. How many steel balls with springs are used in the unit?
9. How many square headed screws are used for clamping all the 4 tools?
10. What is the maximum diameter of the clamp?
11. Specify size of the stud.
12. What is the size of the base plate that fits into the tool holder body?

www.EngineeringBooksPdf.com

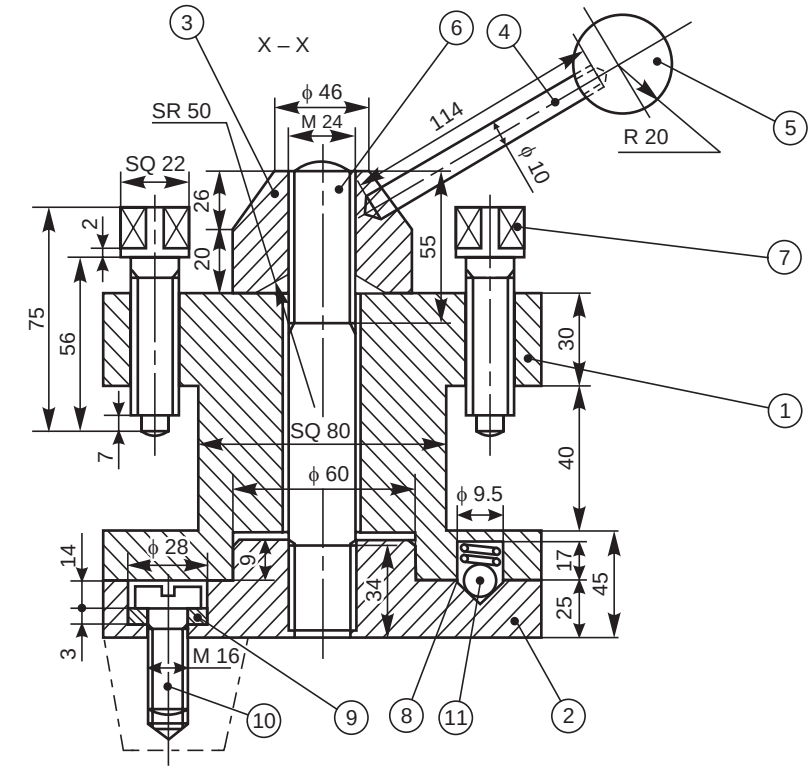

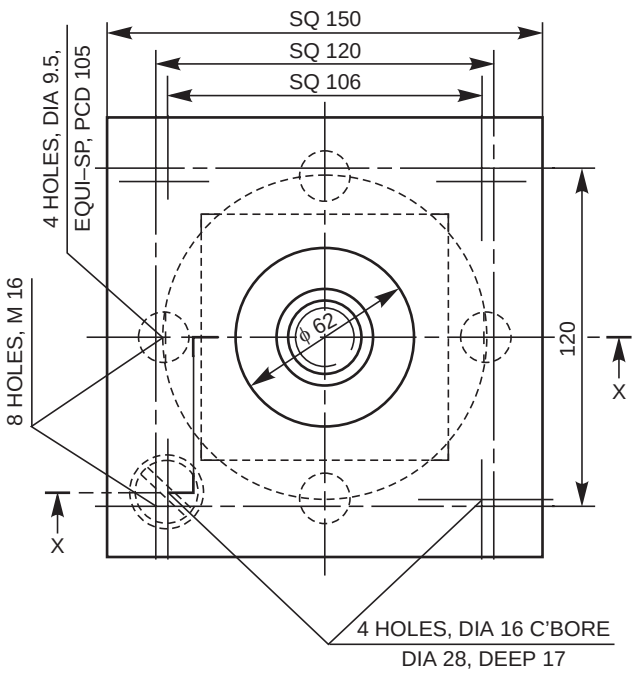

S. No.	Name	Material	Qty
1	Tool holder	Steel	1
2	Base plate	Steel	1
3	Clamp	Steel	1
4	Handle	Steel	1
5	Knob	Ebonite	1
6	Stud	MS	1
7	Screw	Steel	8
8	Spring	Steel	4
9	Spring washer	Steel	4
10	Machine screw	MS	4
11	Ball	Steel	4

Fig. 17.7 Square tool post

www.EngineeringBooksPdf.com

17.3.4 Milling Fixture

The three orthographic views of the assembly of a milling fixture (production drawing) are shown in Fig. 17.8. The fixture is designed to cut a slot in a round rod of 15mm diameter at its end as shown in the drawing. The slot is cut on a vertical milling machine with a slitting saw cutter.

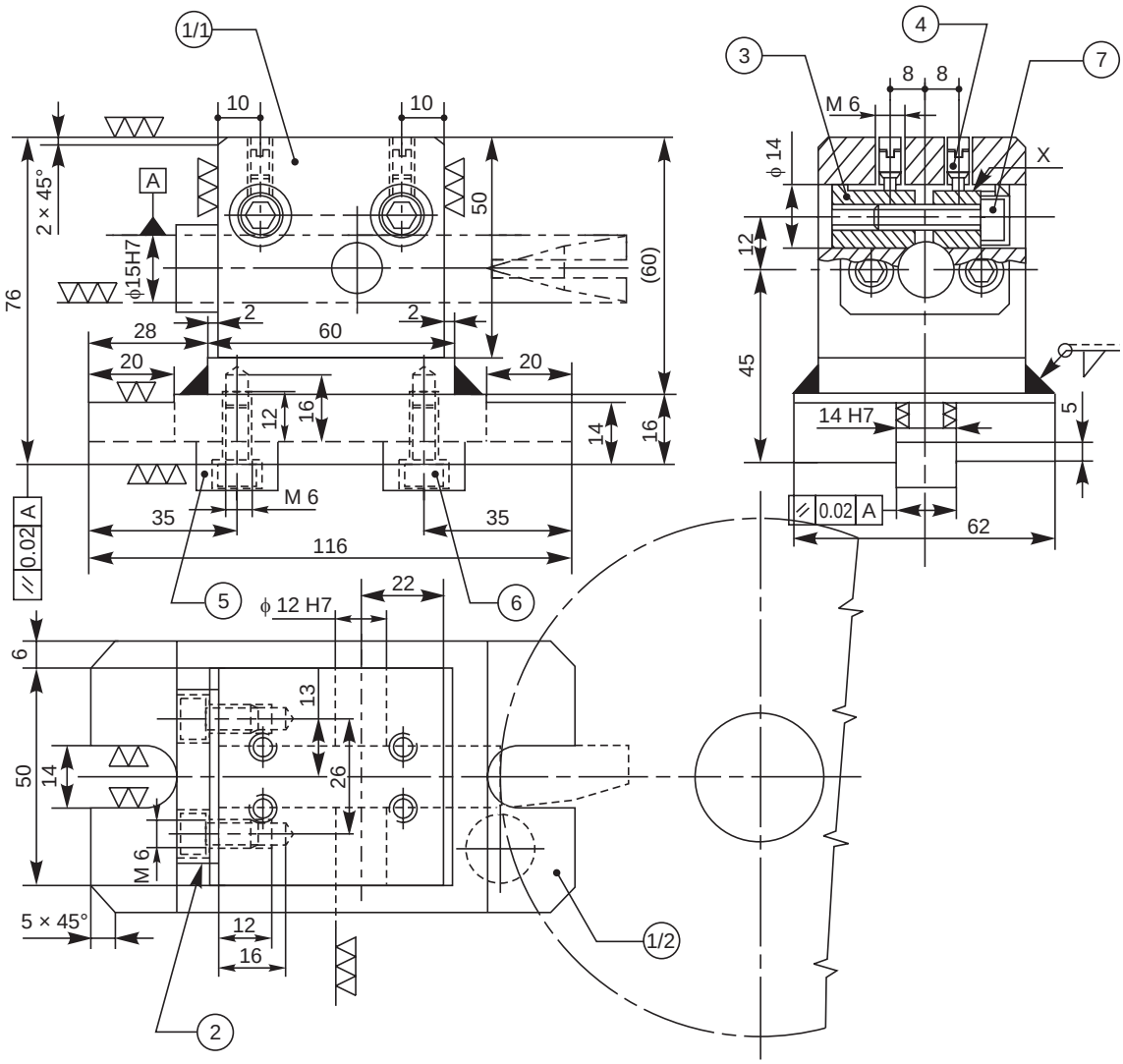

Fig. 17.8 Milling fixture (*contd.)*

www.EngineeringBooksPdf.com

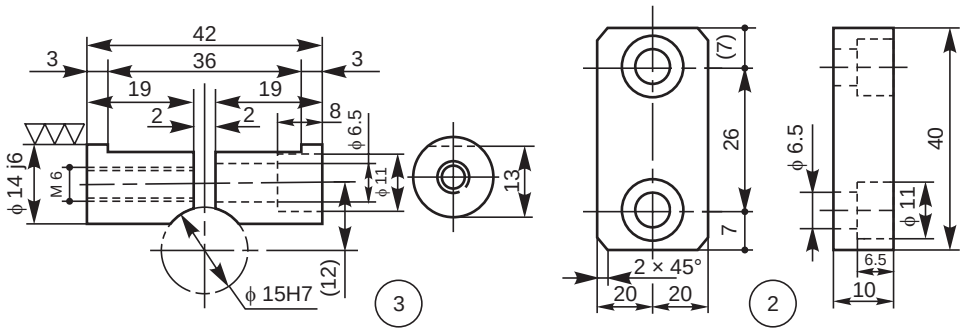

Part No.	Name
1	Fixture body
2	End plate
3	Clamping bush
4	Grub screw
5	Tenon
6	Screw
7	Screw

Fig. 17.8 Milling fixture

Study the views and also the details of the part drawings and answer the following:

1. What is the size of the fixture base (1/2)?
2. What is the size of the end plate (2)?
3. How is the end plate fixed to the fixture body (1)?
4. What is the size of the block (1/1)?
5. How is the block connected to the base?
6. How many tenons are there and what are the sizes?
7. How are the tenons fixed to the base?
8. What is the specification of the screw (7)?
9. What is the thread size shown inside the clamping bush (3)?
10. What is the full specification and meaning of the grub screws.
11. How many grub screws are there?
12. What is the nature of surface provided (round/square/flat, etc.) at the marking 'X'?
13. How do the two halves of the component (3) function to clamp the job?
14. What is the diameter of the job that is held for cutting a slit?
15. Give the values of the tolerances,
    (a) 14 H7 and (b) 14 j 6.
16. What do you understand by the symbols, ▽▽ [▽▽▽]
17. Explain the geometrical tolerance, | // | 0.02 | A | shown in the views.
18. What is the depth of the thread and the drill to fit the component (6)?
19. Explain the weld symbol given in the drawing.
20. What do you understand by the welding symbol?
21. What is the value of the auxiliary functional dimension marked?

www.EngineeringBooksPdf.com

THEORY QUESTIONS

17.1 What is a blueprint and how the original drawing is prepared to take the blueprint from it?

17.2 What are the various reprographic processes that are used to take copies of the original drawing?

17.3 What kind of knowledge is required for blueprint reading?

17.4 What are the two principal dimensions of an object that can be identified from (*a*) view from the front, (*b*) view from the side and (*c*) view from above?

17.5 How many views are required to represent a cylindrical component?

17.6 To understand the visibility of various lines in the view from the front, in what direction, one should see the view from above?

17.7 What kind of notes is required to describe an object, made of a plate and represented by only one view?

17.8 Explain the instructions on the drawing in the form of the following notes:

(*a*) U/C, WIDE 6 DEEP 3

(*b*) ϕ20 C' BORE FOR M19 SOCKET HD CAP SCR

(*c*) 4 HOLES, EQUI - SP PCD 180.

17.9 Write the note forms to indicate the following operations:

(*a*) to drill four holes of diameter 25 mm and depth 40 mm,

(*b*) to drill two holes of diameter 20 mm and countersunk to diameter 25 mm,

(*c*) to cut a key seat of width 6 mm and depth 3 mm on a shaft,

(*d*) to carburise, harden and ground, and

(*e*) to cut an ACME thread of pitch 4 mm on a shaft of 30 mm diameter.

www.EngineeringBooksPdf.com

ASSEMBLY DRAWINGS 18

18.1 INTRODUCTION

A machine is an assembly of various links or parts. It is necessary to understand the relation between the various parts of the unit for the purpose of design and production.

An assembly drawing is one which represents various parts of a machine in their working position. These drawings are classified as design assembly drawings, working assembly drawings, sub-assembly drawings, installation assembly drawings, etc. An assembly drawing made at the design stage while developing a machine is known as design assembly drawing. It is made to a larger scale so that the required changes or modifications may be thought of by the designer, keeping in view both the functional requirement and aesthetic appearance. Working assembly drawings are normally made for simple machines, comprising small number of parts. Each part is completely dimensioned to facilitate easy fabrication. A sub-assembly drawing is an assembly drawing of a group of related parts which form a part of a complicated machine. Thus, a number of such sub-assembly drawings are needed to make a complete unit. An installation assembly drawing reveals the relation between different units of a machine, giving location and dimensions of few important parts.

The final assembly drawings are prepared from design assembly drawings or from the working drawings (component drawings). The class-room exercises are designed to train the students to master fundamentals of machine drawing, such as principles of drawing, orthographic projections, etc. In addition, the student will understand the relation between the different parts of the components and working principles of the assembled unit. The following steps may be made use of to make an assembly drawing from component drawings:

1. Understand the purpose, principle of operation and field of application of the given machine. This will help in understanding the functional requirements of individual parts and their location.

2. Examine thoroughly, the external and internal features of the individual parts.

3. Choose a proper scale for the assembly drawing.

4. Estimate the overall dimensions of the views of the assembly drawing and make the outline blocks for each of the required view, leaving enough space between them, for indicating dimensions and adding required notes.

5. Draw the axes of symmetry for all the views of the assembly drawing.

6. Begin with the view from the front, by drawing first, the main parts of the machine and then adding the rest of the parts, in the sequence of assembly.

7. Project the other required views from the view from the front and complete the views.

8. Mark the location and overall dimensions and add the part numbers on the drawing.

www.EngineeringBooksPdf.com

9. Prepare the parts list.

10. Add the title block.

NOTE It is not advisable to complete one view before commencing the other. The better method is to develop all the required views simultaneously.

18.2 ENGINE PARTS

18.2.1 Stuffing Box

It is used to prevent loss of fluid such as steam, between sliding or turning parts of machine elements. In a steam engine, when the piston rod reciprocates through the cylinder cover; stuffing box provided in the cylinder cover, prevents leakage of steam from the cylinder.

Figure 18.1 shows the various parts of a stuffing box. At the base of stuffing box body 1, a bush 3 is placed such that the bevelled edge of the bush is at the inner side of the body. Gland 2 is placed at the other end of the body and is connected to the main body by means of studs 4 and nuts 5. The space between the reciprocating rod and the bush and the gland is packed with a packing material such as mineral fibres, leather, rubber or cork.

Exercise

Assemble all parts of the stuffing box for a vertical steam engine, shown in Fig. 18.1 and draw, (*i*) half sectional view from the front, with left half in section, (*ii*) half sectional view from the right and (*iii*) view from above.

18.2.2 Steam Engine Crosshead

Crosshead is used in horizontal steam engines for connecting the piston rod and connecting rod. Figure 18.2 shows the part drawings of a steam engine crosshead. The crosshead, with the help of slide block 4, reciprocates between two guides provided in the engine frame. The gudgeon pin 3, connects the slide blocks with the crosshead block 1. This acts as a pin joint for the connecting rod (not shown in figure). The piston rod 2 is secured to the crosshead block by means of the cotter 5. The assembly ensures reciprocating motion along a straight line for the piston rod and reciprocating cum oscillatory motion for the connecting rod.

Exercise

Figure 18.2 shows the details of steam engine crosshead. Assemble the parts and draw, (*i*) half sectional view from the front, with bottom half in section and (*ii*) view from above.

18.2.3 Crosshead

Figure 18.3 shows the details of another type of steam engine crosshead. It consists of a body or slide block 1, which slides in-between parallel guides in the frame of the engine. The piston rod end 2 is fitted to the crosshead with the help of bolts 5 and nuts 6 and 7 after placing the brasses 4, and cover plate 3 in position.

Exercise

The details of a crosshead of a steam engine are shown in Fig. 18.3. Assemble the parts and draw, (*i*) half sectional view from the front, showing top half in section and (*ii*) the view from the left.

18.2.4 Steam Engine Connecting Rod End

Connecting rod in a steam engine connects the crosshead at one end (small end) and the crank at the other end (big end). The cross-section of the connecting rod can be square/circular in shape. Part drawings of a steam engine connecting rod end are shown in Fig. 18.4.

www.EngineeringBooksPdf.com

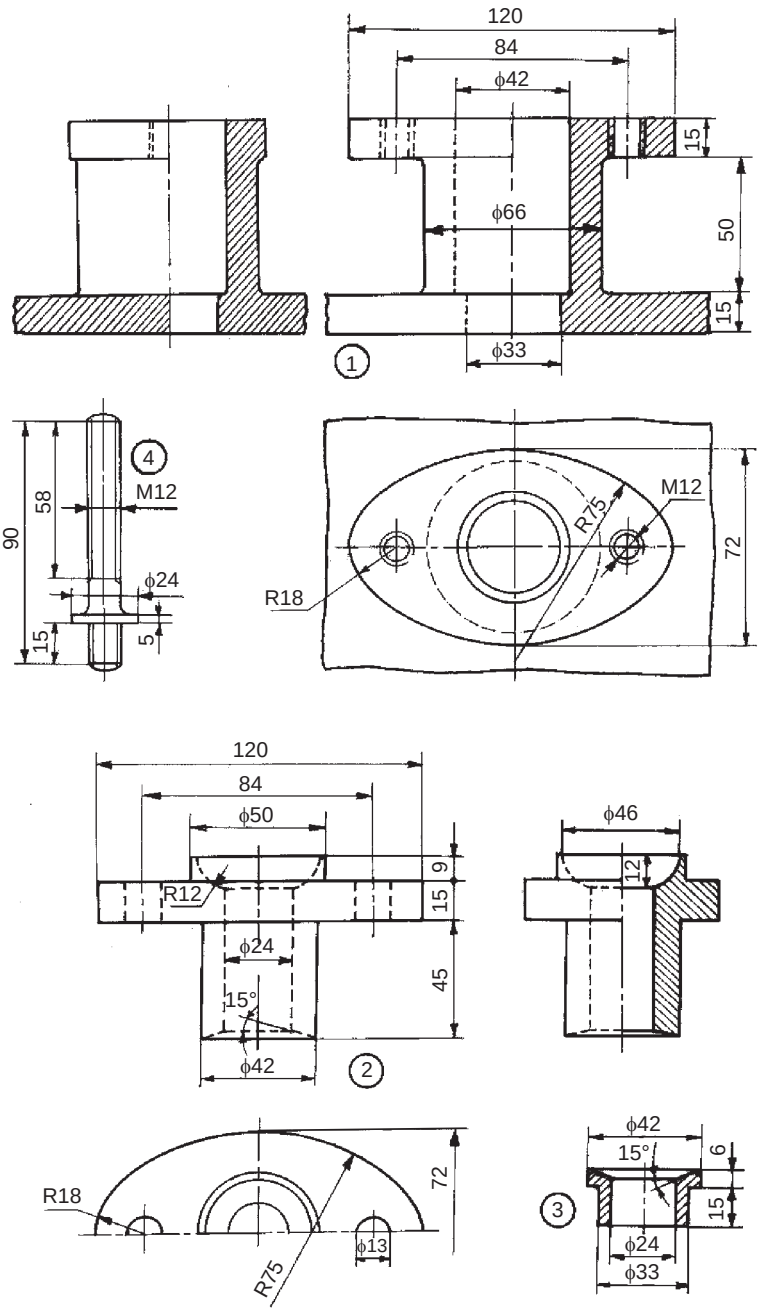

Parts list

Part No.	Name	Matl	Qty
1	Body	CI	1
2	Gland	Brass	1
3	Bush	Brass	1
4	Stud	MS	2
5	Nut, M12	MS	2

Fig. 18.1 Stuffing box

www.EngineeringBooksPdf.com

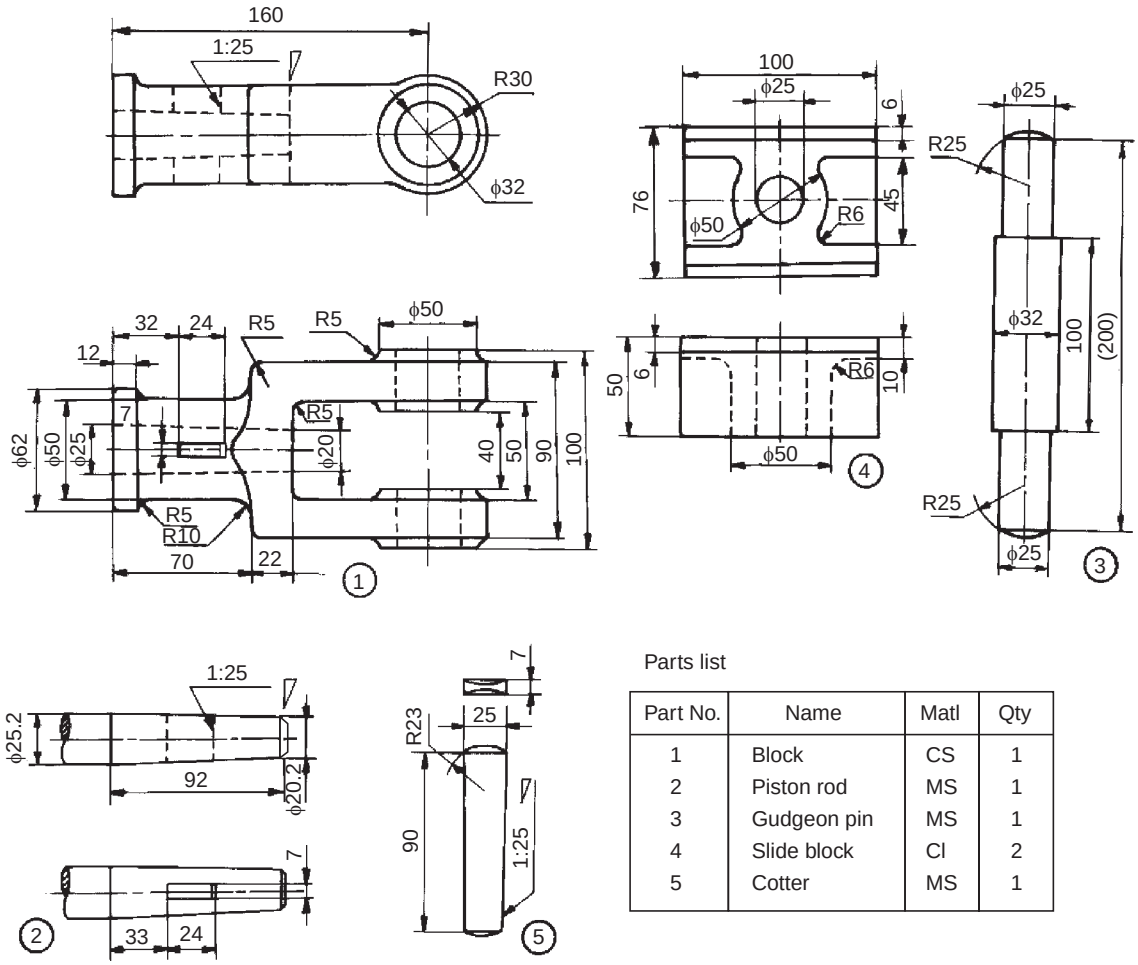

Parts list

Part No.	Name	Matl	Qty
1	Block	CS	1
2	Piston rod	MS	1
3	Gudgeon pin	MS	1
4	Slide block	CI	2
5	Cotter	MS	1

Fig. 18.2 Steam engine crosshead

It consists of strap 3 which connects both the square end of the connecting rod 1 and the brasses 2. The strap is fastened to the rod by jib 4 and cotter 5. Finally, the cotter is locked in position by the set-screw 6. Figure 19.3 shows the assembly drawing of a steam engine connecting rod end.

Exercise

The components of a steam engine connecting rod end are shown in Fig. 18.4. Assemble the parts and draw, (*i*) half sectional view from the front, with top half in section and (*ii*) view from above.

18.2.5 Marine Engine Connecting Rod End

Marine engines are used to produce high power and as such all the parts of the engine are sturdy and strong. The part drawings of a marine engine connecting rod end are shown in Fig. 18.5.

It consists of two halves of the bearing brasses 3, which are placed around the crank pin. The cover end 2 and the rod end 1 are placed in position and fastened by means of bolts 4 and nuts 5, after placing the leather packing 8 in-between the bearing brasses. Snug 7 in the bolts, prevents rotation of the bolts while they are tightened with the nuts. Split cotters 6 are used to prevent the loosening tendency of the nuts. Figure 19.2 shows the assembly drawing.

www.EngineeringBooksPdf.com

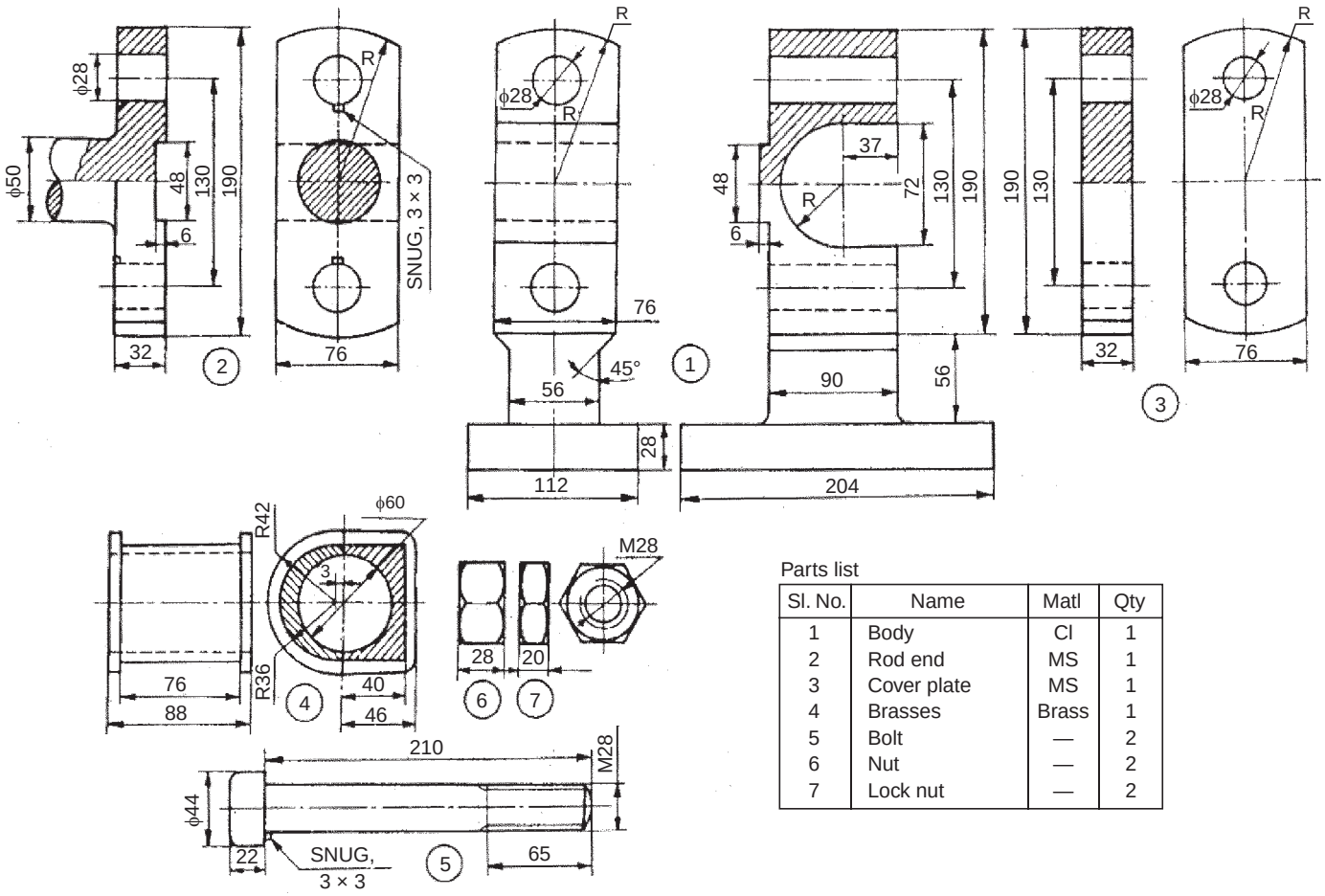

Parts list

Sl. No.	Name	Matl	Qty
1	Body	Cl	1
2	Rod end	MS	1
3	Cover plate	MS	1
4	Brasses	Brass	1
5	Bolt	—	2
6	Nut	—	2
7	Lock nut	—	2

Fig. 18.3 Crosshead

www.EngineeringBooksPdf.com

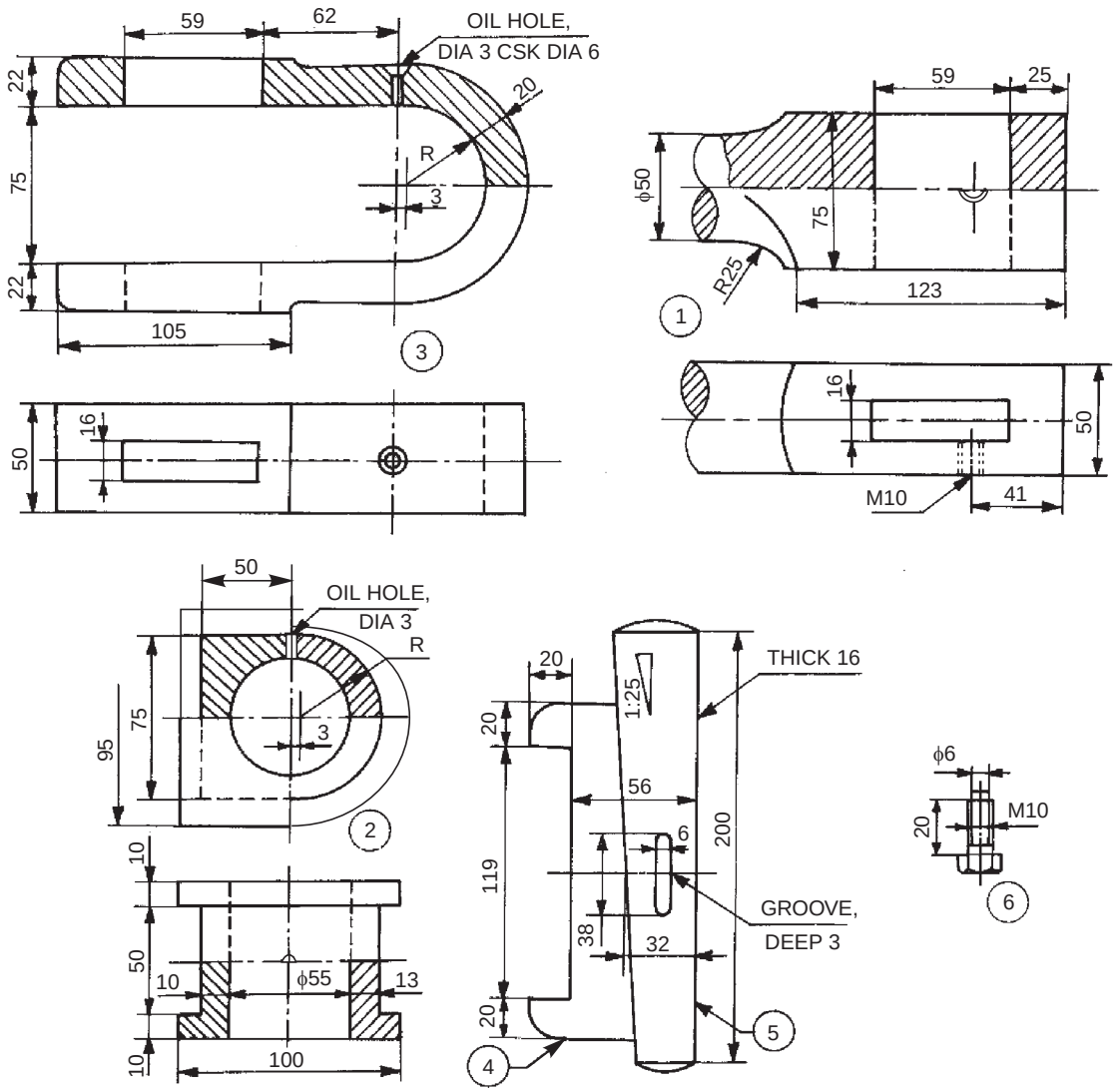

Parts list

Sl. No.	Name	Matl.	Qty.
1	Connecting rod	FS	1
2	Brasses	GM	2
3	Strap	MS	1
4	Jib	MS	1
5	Cotter	MCS	1
6	Set screw	MCS	1

Fig. 18.4 Steam engine connecting rod end

Exercise

The components of a marine engine connecting rod end are shown in Fig. 18.5. Assemble the parts and draw, (*i*) half-sectional view from the front, with bottom half in section and (*ii*) view from above.

www.EngineeringBooksPdf.com

18.2.6 Piston

A piston is cylindrical in form and reciprocates in a cylinder. The petrol engine piston is generally die cast in aluminium alloy. It is connected to the small end of the connecting rod by means of a gudgeon pin. Figure 18.6 shows the details of the petrol engine piston assembly.

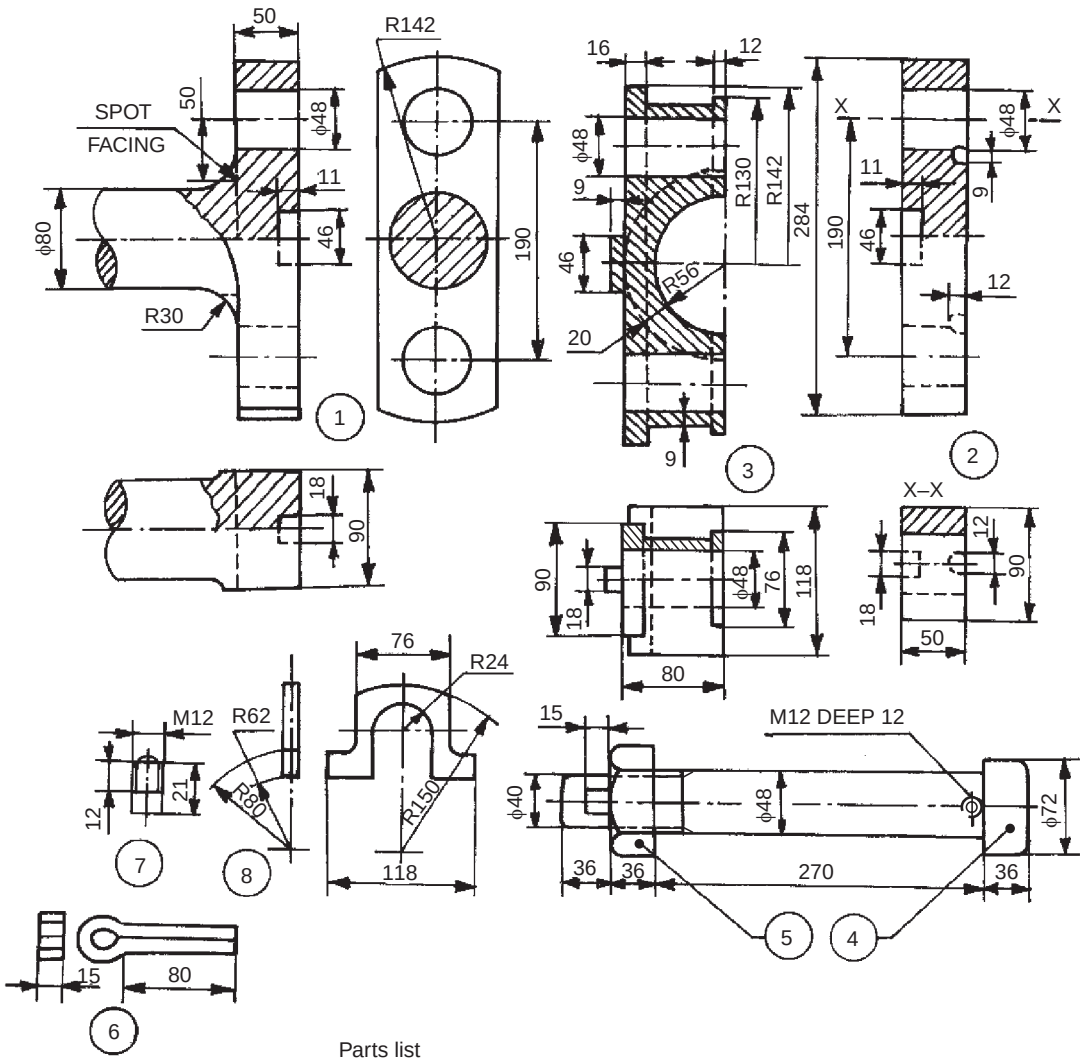

Parts list

Sl. No.	Name	Matl.	Qty.
1	Rod end	FS	1
2	Cover end	FS	1
3	Bearing brass	GM	2
4	Bolt	MS	2
5	Nut	MS	2
6	Split cotter	MS	2
7	Snug	MS	2
8	Leather packing	—	2

Fig. 18.5 Marine engine connecting rod end

www.EngineeringBooksPdf.com

Five piston rings 4 are positioned in the piston 1; four at the top and one at the bottom. The top piston rings, known as compression rings, prevent leakage of gases from combustion chamber into the crank case. The bottom one; oil or scraper ring, prevents the lubricating oil from entering the combustion chamber.

The piston is connected to the small end of the connecting rod, by means of the gudgeon or piston pin 2; the axial movement of which is prevented by piston plugs 3.

Exercise

Assemble the parts of the piston, shown in Fig. 18.6 and draw the following views:

(*i*) Sectional view from the front,

(*ii*) Half sectional view from the left, and

(*iii*) Sectional view from above.

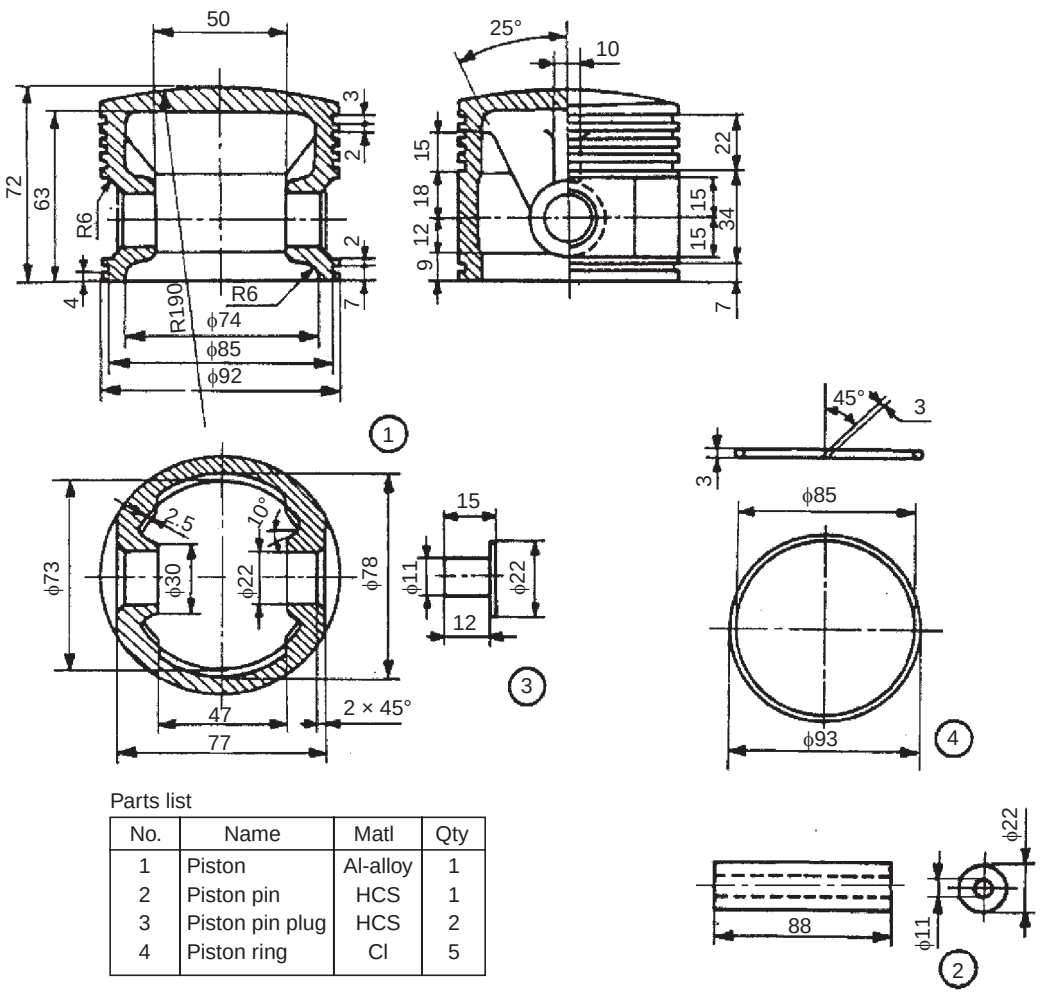

Parts list

No.	Name	Matl	Qty
1	Piston	Al-alloy	1
2	Piston pin	HCS	1
3	Piston pin plug	HCS	2
4	Piston ring	Cl	5

Fig. 18.6 Piston of a petrol engine

18.2.7 Radial Engine Sub-assembly

Radial engines are mainly used for aircraft applications and are air-cooled type. The radial engine employs a master connecting rod to which other connecting (articulated) rods are attached radially.

www.EngineeringBooksPdf.com

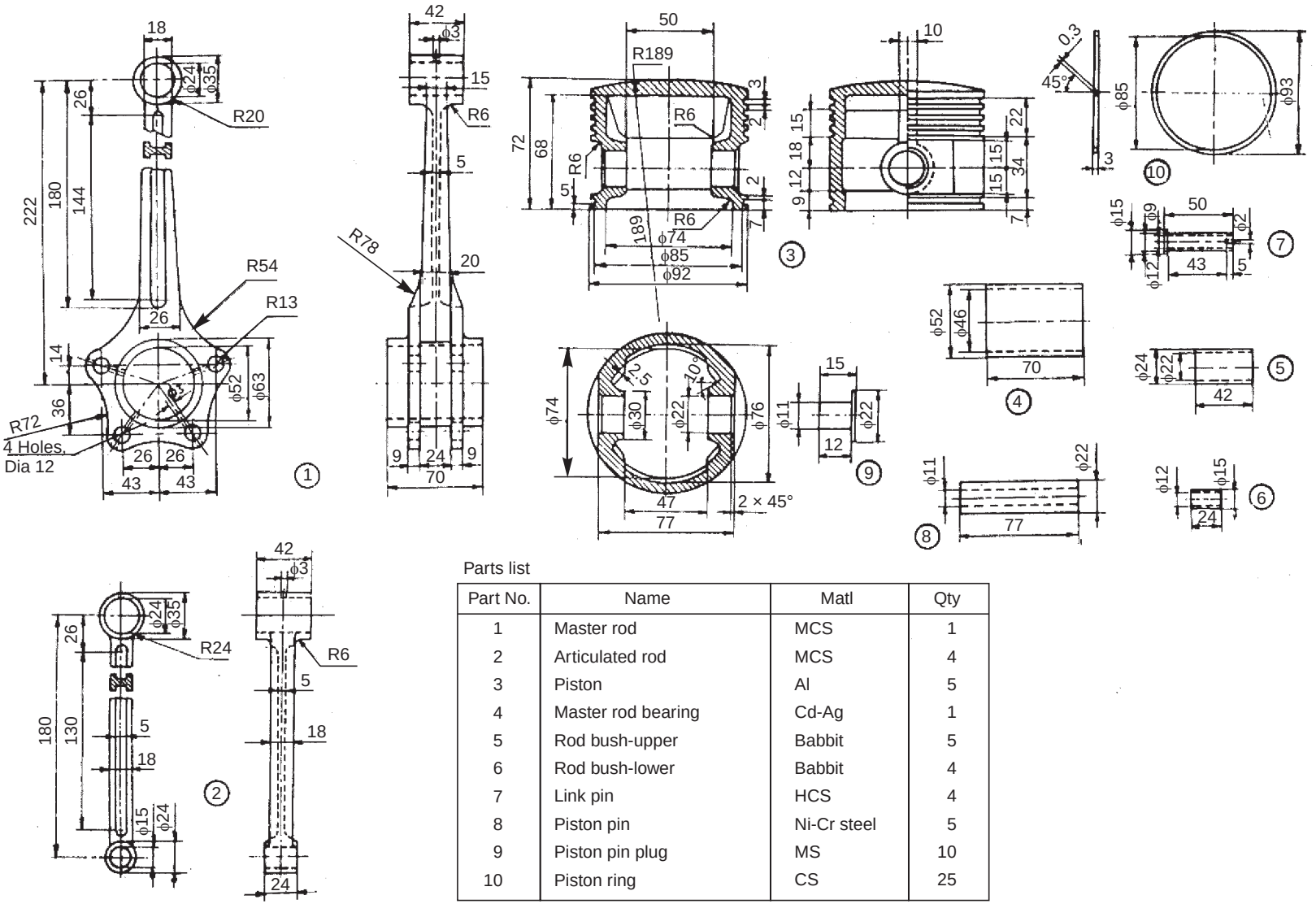

Parts list

Part No.	Name	Matl	Qty
1	Master rod	MCS	1
2	Articulated rod	MCS	4
3	Piston	Al	5
4	Master rod bearing	Cd-Ag	1
5	Rod bush-upper	Babbit	5
6	Rod bush-lower	Babbit	4
7	Link pin	HCS	4
8	Piston pin	Ni-Cr steel	5
9	Piston pin plug	MS	10
10	Piston ring	CS	25

Fig. 18.7 Radial engine sub-assembly

www.EngineeringBooksPdf.com

Figure 18.7 shows the radial engine sub-assembly of a five cylinder engine. The articulated rods 2 are connected to the master rod 1 by means of rod bush 6, and link pins 7. Aluminium pistons 3 are assembled with master and articulated rods using bushes 5, piston pins 8 and piston pin plugs 9. Five piston rings 10 are provided per piston. The bearing 4 is used at the big end of the master rod; the end of which is connected to the crank pin of the crankshaft.

Exercise

Prepare an assembly drawing of the radial engine sub-assembly, the details of which are shown in Fig. 18.7, showing one piston in full section.

18.2.8 Eccentric

It is used to provide a short reciprocating motion, actuated by the rotation of a shaft. Eccentrics are used for operating steam valves, small pump plungers, shaking screens, etc. The components of an eccentric are shown in isometric views (Fig. 18.8*a*) for easy understanding of their shapes. Rotary motion can be converted into a reciprocating motion with an eccentric, but the reverse conversion is not possible due to excessive friction between the sheave and the strap. The crank arrangement, in a slider crank mechanism however, allows conversion in either direction.

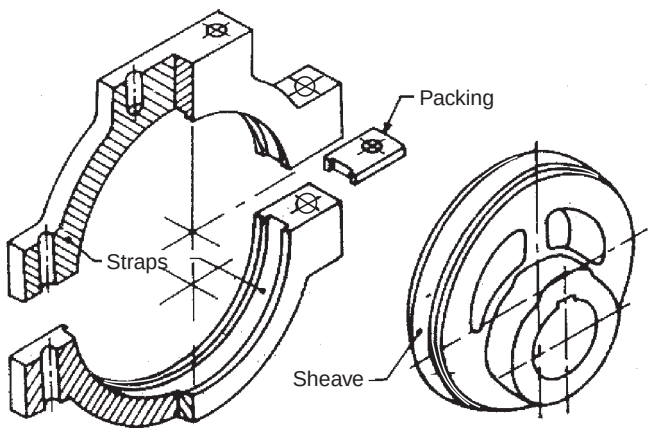

Fig. 18.8a Components of an eccentric in isometric view

Figure 18.8*b* shows the various parts of an eccentric. The sheave 2 which is in the form of a circular disc with a stepped rim is keyed on the shaft. When the shaft rotates, the sheave rotates eccentrically because of the eccentrically placed hole in it and imparts reciprocating motion to eccentric rod 6.

The straps 1 are semi-circular elements with an annular recess to accommodate the stepped rim of the sheave. These are held together on the sheave by means of strap bolts 4, with packing strips 3 placed between them. The eccentric rod is fixed to the eccentric strap by means of the studs and nuts 5.

Exercise

The details of an eccentric are shown in Fig. 18.8*b*. Assemble the parts and draw, (*i*) half sectional view from the front, with top half in section, (*ii*) view from the right and (*iii*) view from above.

18.2.9 Rotary Gear Pump

It is used to supply lubricating oil from the sump to the required places of an internal combustion engine, under pressure and is positive displacement type. Figure 18.9 shows the details of a rotary gear pump.

www.EngineeringBooksPdf.com

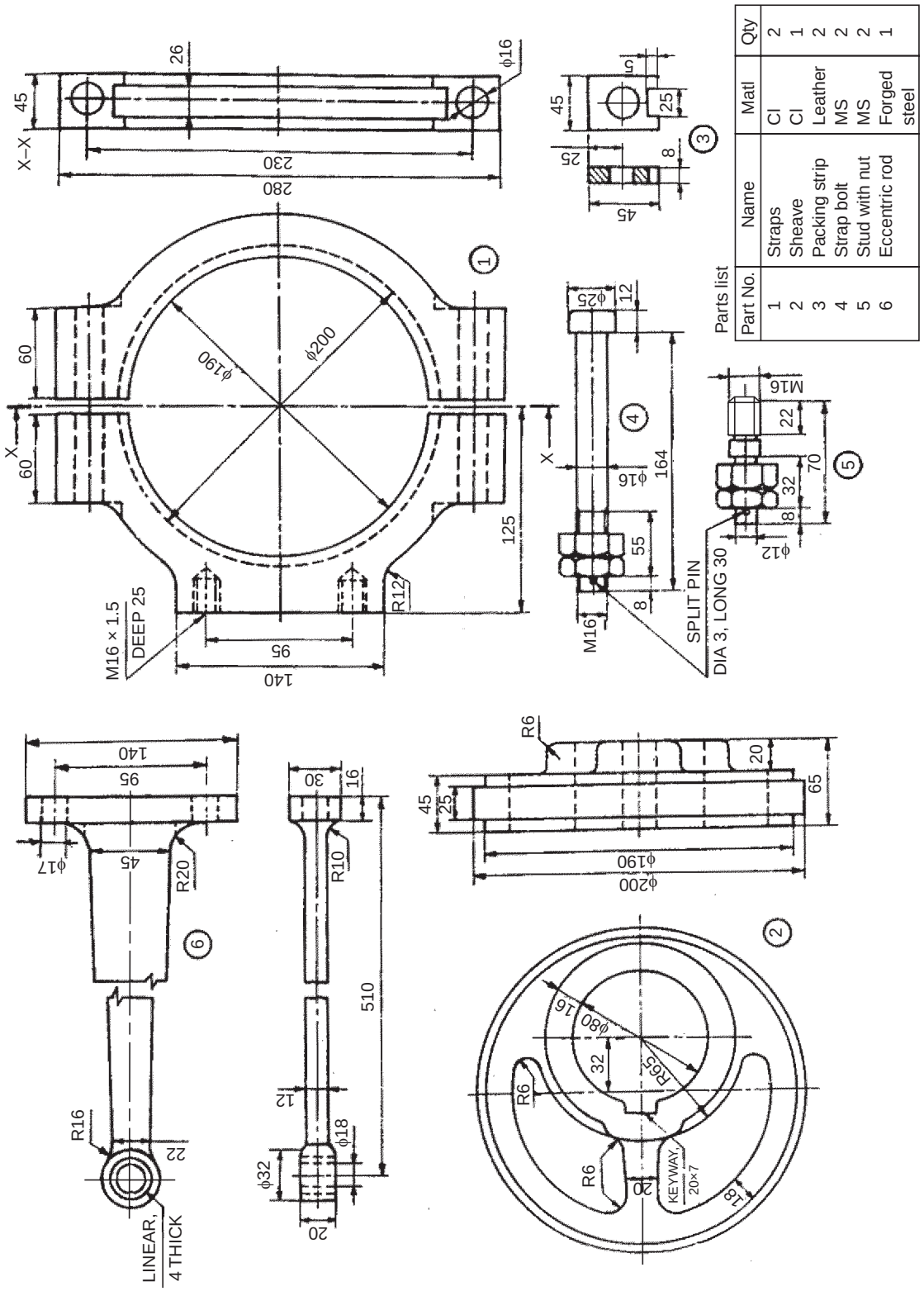

Parts list

Part No.	Name	Matl	Qty
1	Straps	CI	2
2	Sheave	CI	1
3	Packing strip	Leather	2
4	Strap bolt	MS	2
5	Stud with nut	MS	2
6	Eccentric rod	Forged steel	1

Fig. 18.8b Details of an eccentric

www.EngineeringBooksPdf.com

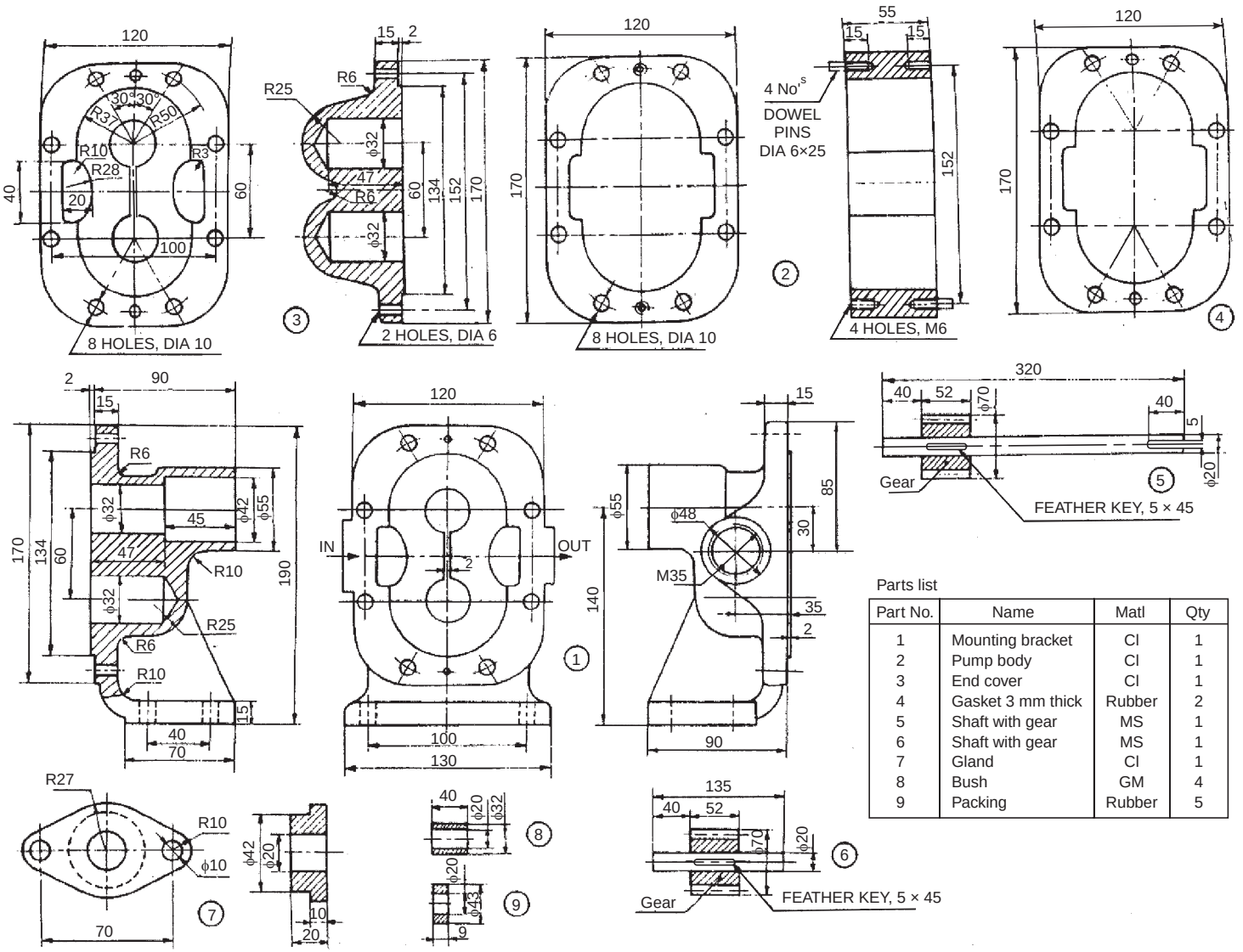

Parts list

Part No.	Name	Matl	Qty
1	Mounting bracket	CI	1
2	Pump body	CI	1
3	End cover	CI	1
4	Gasket 3 mm thick	Rubber	2
5	Shaft with gear	MS	1
6	Shaft with gear	MS	1
7	Gland	CI	1
8	Bush	GM	4
9	Packing	Rubber	5

Fig. 18.9 Rotary gear pump

www.EngineeringBooksPdf.com

The two gaskets 4 are placed; one on the end cover 3 and the other on the mounting bracket 1 in position. Two each of bushes 8 are placed on the end cover and mounting bracket to provide bearing surfaces for the gear shafts. End cover is connected to the pump body 2 after placing the dowel pins in the body. The shaft with gear 6 is placed in the bottom recess, whereas the shaft with gear 5 is located in the top recess of the end cover and pump body assembly. Finally, the mounting bracket is connected to the pump body after locating the dowels in the pump body. The gland 7 is placed on the mounting bracket, after locating the packing 9 between the mounting bracket and the shaft with gear 5.

The end cover, pump body and the mounting bracket are connected or fastened, using bolts and nuts (not shown). Similarly, the gland is fastened to the mounting bracket by using two studs and nuts (not shown). At the end, oil inlet and outlet connections are made through the mounting bracket.

Exercise

Assemble the parts of the rotary gear pump, shown in Fig. 18.9 and draw, (*i*) sectional view from the front and (*ii*) view from the right.

18.2.10 Air Valve

Air valve is used with a diesel engine to let-in air into the cylinder. Normally, the valve is in closed position under spring pressure. It is opened by means of a cam, actuating the rocker arm through a lever.

Figure 18.10 shows the details of an air valve. The valve 2 is introduced through the valve box 1 so that it fits into the valve seat. The spring 3 is slipped through the stem of the valve and made to sit at S-S in the box. The spring seat 4 is then placed on the valve and fixed in position by means of a hexagonal nut 5 with pin. The rocker arm 6 is fitted to the valve box at M by means of the pin 7. The lever 8 is placed in the rocker arm at N and positioned by pin 9.

Exercise

Figure 18.10 shows the complete details of air valve of a diesel engine. Assemble the parts and draw, (*i*) sectional view from the front and (*ii*) view from above. Use suitable scale.

18.2.11 Fuel Injector

The fuel injector is used on a diesel engine. It injects highly pressurised diesel, supplied by a fuel pump, into the combustion chamber of the engine cylinder.

The details of the fuel injector are shown in Fig. 18.11. The spring 7 is located in the body 1 above the distance piece 6. The nozzle pin 5 is placed inside the nozzle 2 and attached to the body by means of nozzle holder 3. The screw adjuster 8 is placed over the spring from the other side (top) of the body. The adjusting screw 9 is located in the cap 4 and it is held in position by the lock-nut 10.

The body has a narrow hole of 2 mm diameter, through which the pressurised diesel from the fuel pump enters the nozzle. When it exceeds the set pressure of the spring, the diesel is sprayed through the nozzle into the cylinder and as soon as the pressure falls back, the injection ceases. The excess oil left-over in the injector, flows back through the clearance around the distance piece into the over-flow exit, provided at location M6.

Exercise

Figure 18.11 shows the details of a fuel injector. Assemble the parts and draw, (*i*) half sectional view from the front and (*ii*) the view from above.

18.2.12 Single Plate Clutch

A clutch is a device through which power is transmitted from the engine or driving shaft to the driven shaft. Facility for disengaging the connection and stopping the power transmission as and when required is incorporated in all designs of clutches.

www.EngineeringBooksPdf.com

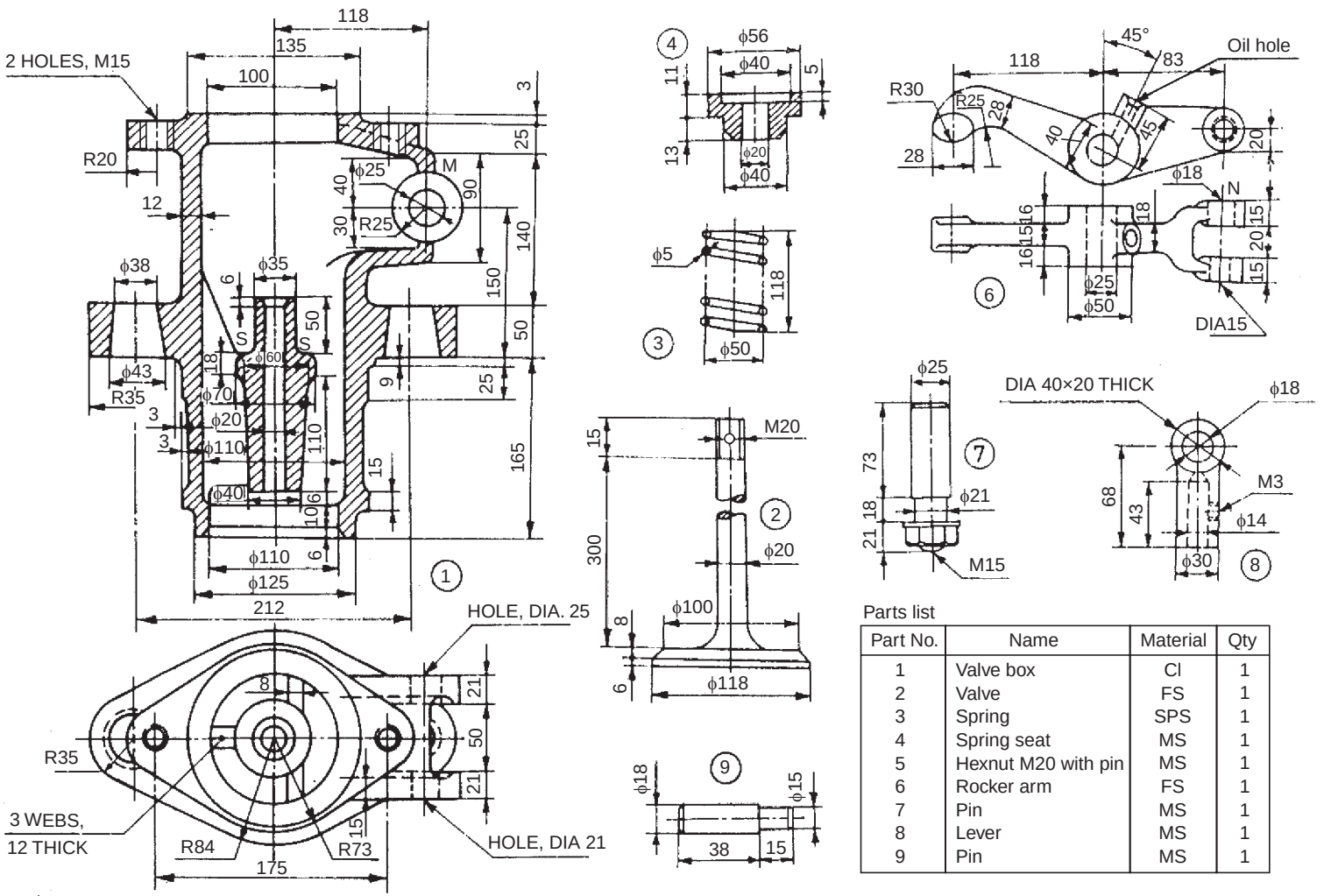

Parts list

Part No.	Name	Material	Qty
1	Valve box	CI	1
2	Valve	FS	1
3	Spring	SPS	1
4	Spring seat	MS	1
5	Hexnut M20 with pin	MS	1
6	Rocker arm	FS	1
7	Pin	MS	1
8	Lever	MS	1
9	Pin	MS	1

Fig. 18.10 Air valve

www.EngineeringBooksPdf.com

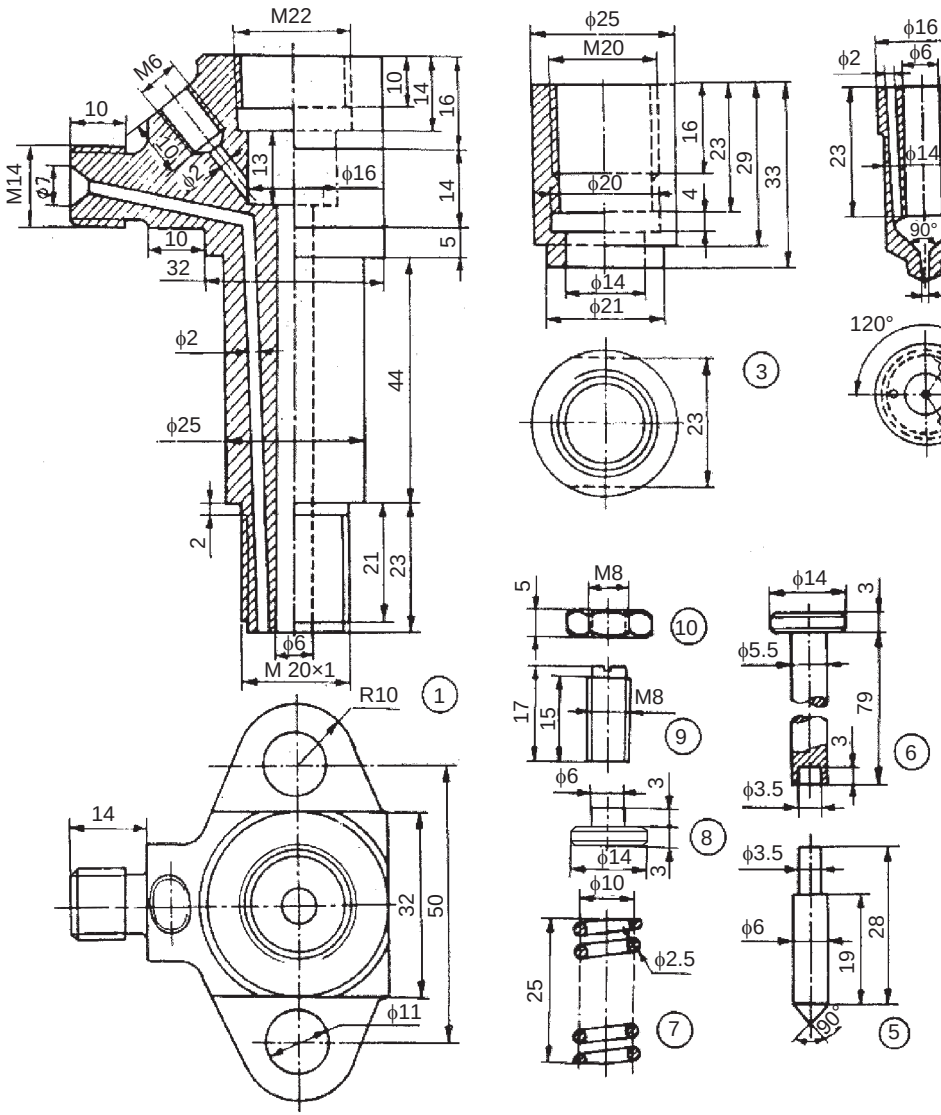

Parts list

Sl No.	Name	Matl	Qty
1	Body	Cl	1
2	Nozzle	Brass	1
3	Nozzle holder	MS	1
4	Cap	MS	1
5	Nozzle pin	Brass	1
6	Distance piece	MS	1
7	Spring	Spring steel	1
8	Screw adjuster	MS	1
9	Adjusting screw	MS	1
10	Lock nut	MS	1

Fig. 18.11 Fuel injector

www.EngineeringBooksPdf.com

Friction clutches which are in common use are of two categories—single plate/disc and multiplate/disc clutches. In a single plate clutch, only one plate with one or two friction surfaces is used. Figure 18.12*a* illustrates various parts of a single plate clutch. It consists of a flywheel 1 which provides one friction face. The flywheel is mounted on the driving shaft. The spring loaded friction plate 2 is mounted on the driven splined shaft 11. The clutch pressure plate 3 is connected to the cover 13 through clutch release levers 4, lever plate 5, lever fulcrum pin 6, by lever screw 7 and nut 8.

The driving flange 10 houses lever spring 9 along with the clutch pressure plate. The cover is bolted to the flywheel by means of screws 14. The friction facings are riveted to the segments of the spring loaded friction plate to give smooth engagement and prevent sticking.

When the clutch is engaged, the friction plate is sandwitched between the faces of the flywheel and the pressure plate, thus transmitting power to the driven shaft through the friction plate.

When disengaging, the clutch springs 12 act through the release levers and force the pressure plate away from the friction plate, thus disengaging the driven shaft. Figure 18.12*b* shows an isometric view of the assembly drawing of the single plate clutch.

Exercise

Figure 18.12 a illustrates the details of a single plate clutch. Assemble the parts and draw, (*i*) the view from the front and (*ii*) sectional view from the right.

18.2.13 Multiplate Friction Clutch

In a multiplate friction clutch, a number of discs or plates with frictional surfaces on either side are located alternately on the driving and driven shafts. By bringing these, close together by external pressure, power can be transmitted from the driving to the driven shaft. Multiplate clutches are normally wet type, whereas, single plate clutches are dry. The multiplate clutch is located on the driving shaft. The pulley/wheel mounted on the shell serves as a driven member. There is no driven shaft.

Figure 18.13*a* illustrates various parts of a multiplate clutch. The serrations on the internal diameter of the shell 1, receive the alternate friction discs called the outside plates 3. The shell along with a bush is mounted freely on the driving shaft, has provision to receive the driven pulley or wheel. A centre boss 5 is keyed onto the driving shaft. The serrations on the centre boss receive the alternate friction discs called the inside plates 4.

The front cover 2, is fixed to the shell by means of six small set screws 12. The front cover is able to either slide or rotate freely on the driving shaft with the bush provided. The sliding sleeve 9, rotates freely on the driving shaft and is connected to the front cover through three jaw levers 7, and three L-levers 8. The last outside plate called a stud carrier 6, is provided with the arrangement to carry three studs 10, which are operated by the sliding sleeve through the L-lever.

The sliding sleeve rotates with the clutch body, *i.e.*, the shell. The sleeve can be moved forward by an operating lever (not shown) in order to exert pressure on the studs. The plates will then get pressed together and the drive is completed. Figure 18.13*b* shows the assembly drawing of the multiplate clutch.

Exercise

Assemble all parts of the multiplate friction clutch shown in Fig. 18.13 (*a*) and draw, (*i*) the half sectional view from the front, with top half in section and (*ii*) the view from the right.

www.EngineeringBooksPdf.com

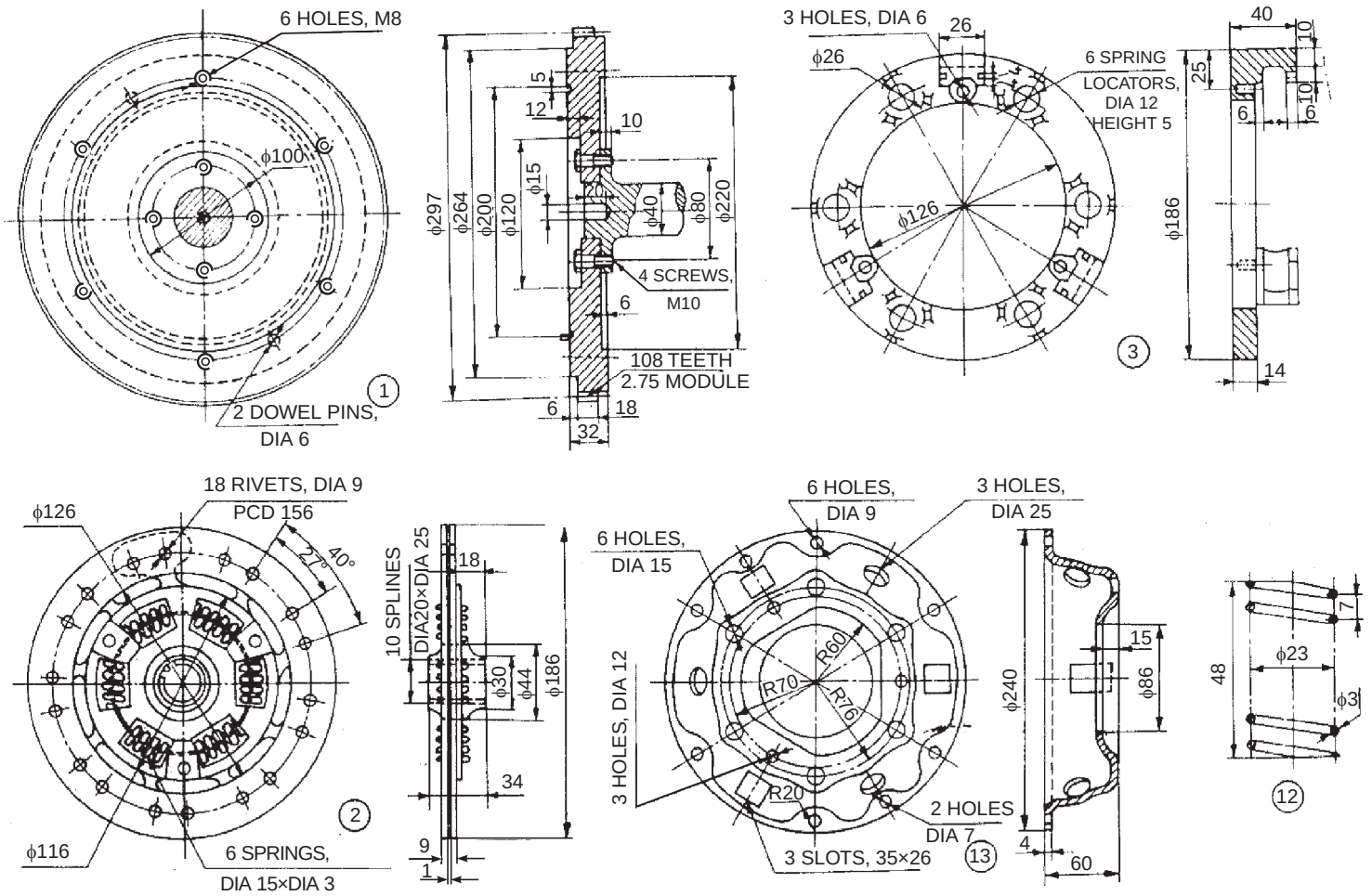

Fig. 18.12 Single plate clutch (*contd.)*

www.EngineeringBooksPdf.com

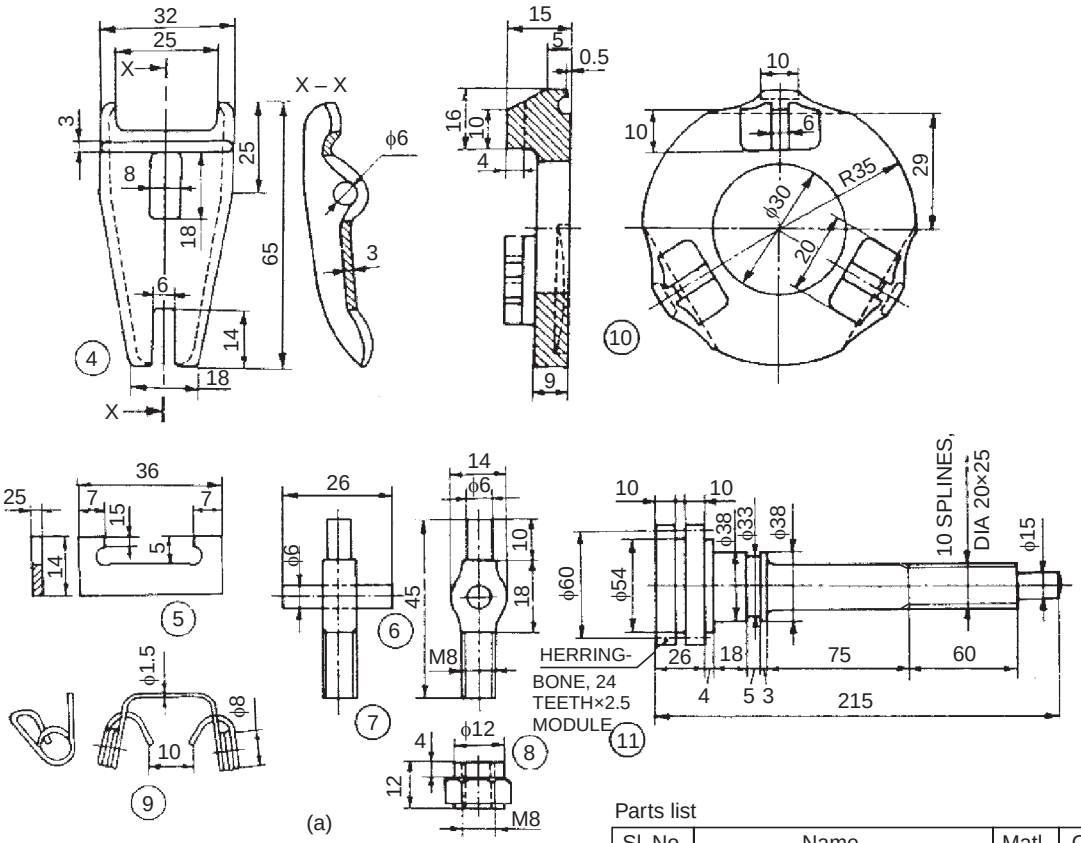

(a)

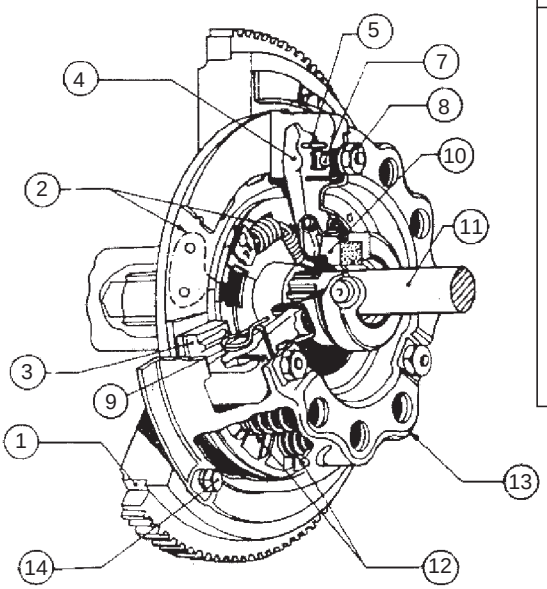

(b)

Parts list

Sl. No.	Name	Matl	Qty
1	Flywheel with driving shaft	FS	1
2	Spring loaded friction plate	—	1
3	Clutch pressure plate	FS	1
4	Clutch release levers	MS	3
5	Lever plate	MS	3
6	Lever fulcrum pin	MS	3
7	Lever screw	MS	3
8	Nut	—	3
9	Lever spring	Sp.S	3
10	Driving flange	FS	1
11	Driven shaft	FS	1
12	Clutch spring	Sp.S	6
13	Cover	MS	1
14	Hexagonal headed screws, M8	—	6

Fig. 18.12 Single plate clutch

www.EngineeringBooksPdf.com

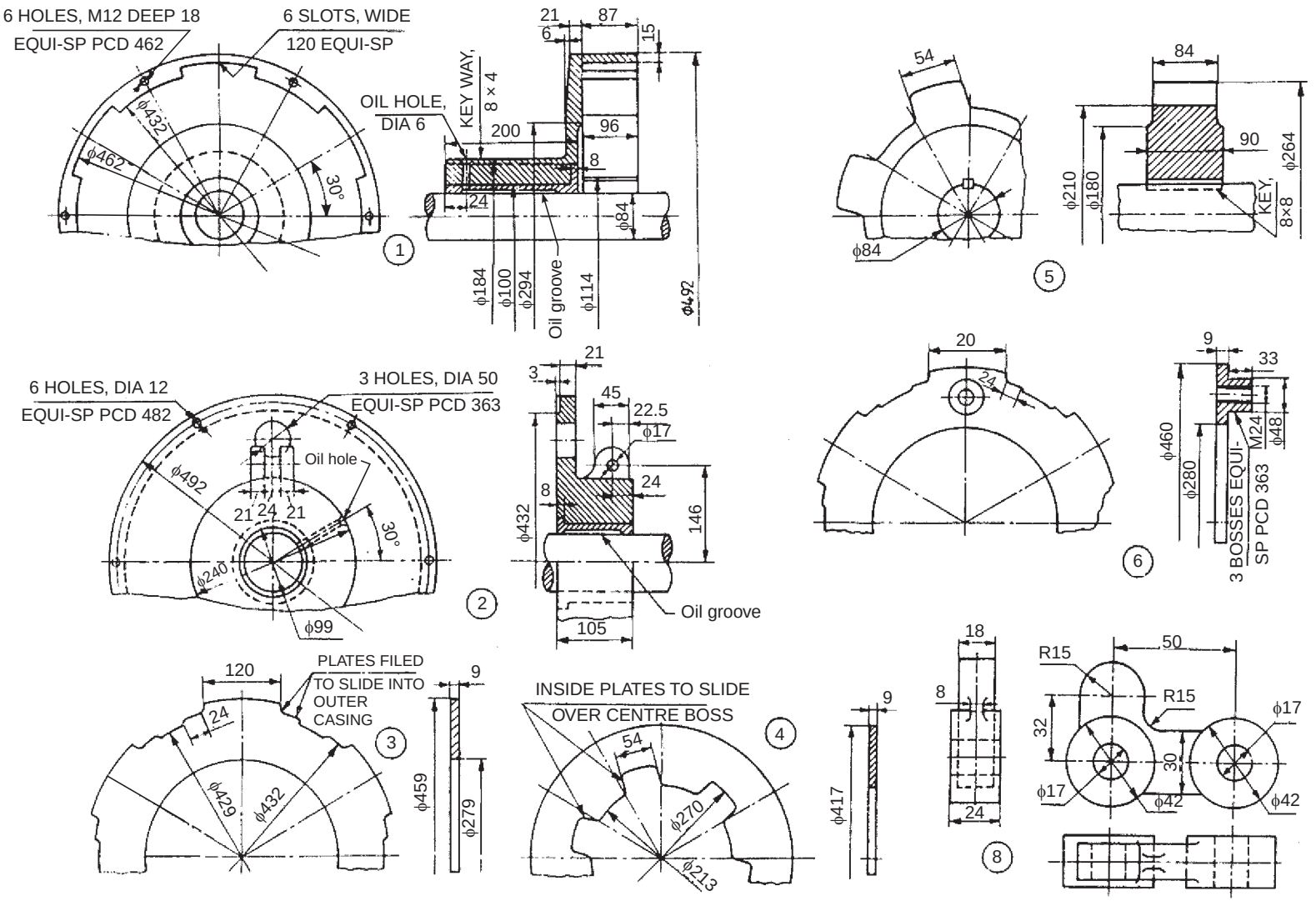

Fig. 18.13a Details of multiplate friction clutch (*contd.)*

www.EngineeringBooksPdf.com

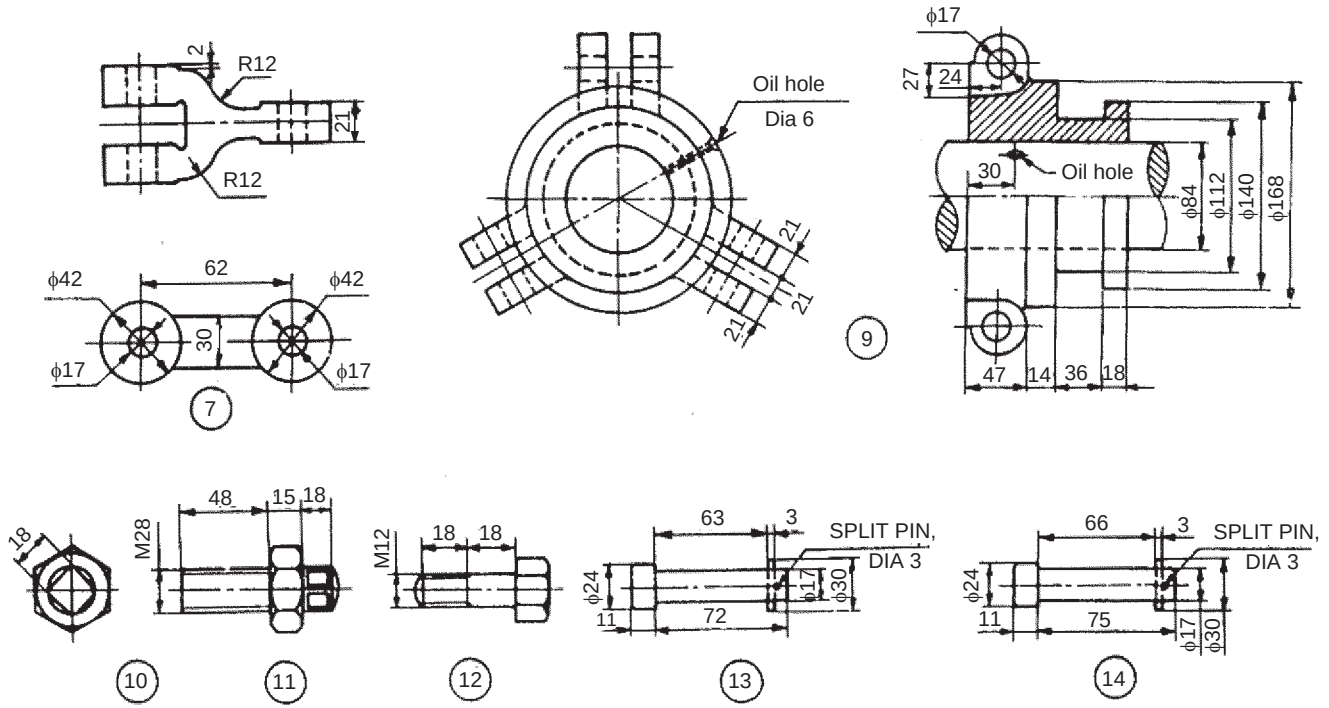

Parts list

Sl No.	Name	Matl	Qty	Sl No.	Name	Matl	Qty
1	Shell	Cl	1	8	L-Lever	MS	3
2	Front cover	Cl	1	9	Sliding sleeve	Cl	1
3	Outside plate	Cl	3	10	Stud	MS	3
4	Inside plate	Cl	4	11	Nut	MS	3
5	Centre boss	Cl	1	12	Set screw	MS	6
6	Stud carrier	Cl	1	13	Sleeve pin	MS	3
7	Jaw lever	MS	3	14	Jaw lever and front cover pin	MS	6

Fig. 18.13a Details of multiplate friction clutch

www.EngineeringBooksPdf.com

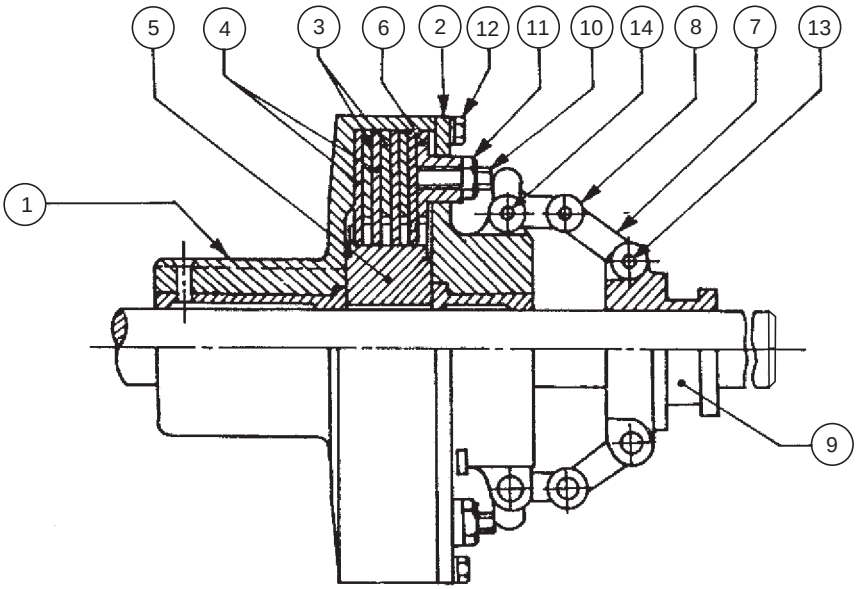

Fig. 18.13b Multiplate friction clutch

18.3 MACHINE TOOL PARTS AND ACCESSORIES

18.3.1 Single Tool Post

Tool posts of several designs are available to support and hold the cutting tools in lathe machines. Figure 18.14 shows the part drawings of a single tool post, which supports one cutting tool at a time and is used on small sized lathes. This unit is fixed on the compound rest of the lathe carriage.

The single tool post consists of a circular body 1 with a collar at one end and a threaded hole at the other. A vertical slot is provided in the body to accommodate the tool/tool holder. The body is slid through the square block 5, which is finally located in the T-slot, provided in the compound rest. The design permits rotation of the body about the vertical axis. A circular ring 4 having spherical top surface is slid over the body and the wedge 3 is located in the vertical slot.

The tool / tool holder is placed over the wedge. By sliding the wedge on the ring, the tool tip level can be adjusted. The tool is clamped in position by means of the square headed clamping screw 2, passing through the head of the body. Figure 19.8 shows the assembly drawing of a single tool post.

Exercise

Assemble the parts of a lathe single tool post, shown in Fig. 18.14 and draw, (*i*) half sectional view from the front and (*ii*) view from the right.

18.3.2 Square Tool Post

This is used to hold four different tools at a time. The tool holder may be rotated and clamped to facilitate the use of any one of the tools at a time. The details of the square tool post are shown in Fig. 18.15.

The tool holder 1 is located on the base plate 2 by means of the stud 3. It can be fixed to the base plate in any position rigidly by the clamping nut 4 and handle 5. The knob 6 is fitted to the handle for smooth operation. The tools are held in the tool post by means of the set screws 7. Each

www.EngineeringBooksPdf.com

tool can be indexed readily by rotating the tool holder on the base plate and located in the correct position by the spring 9 and the ball 10. The ball is seated in the V-groove, provided for this purpose in the base plate.

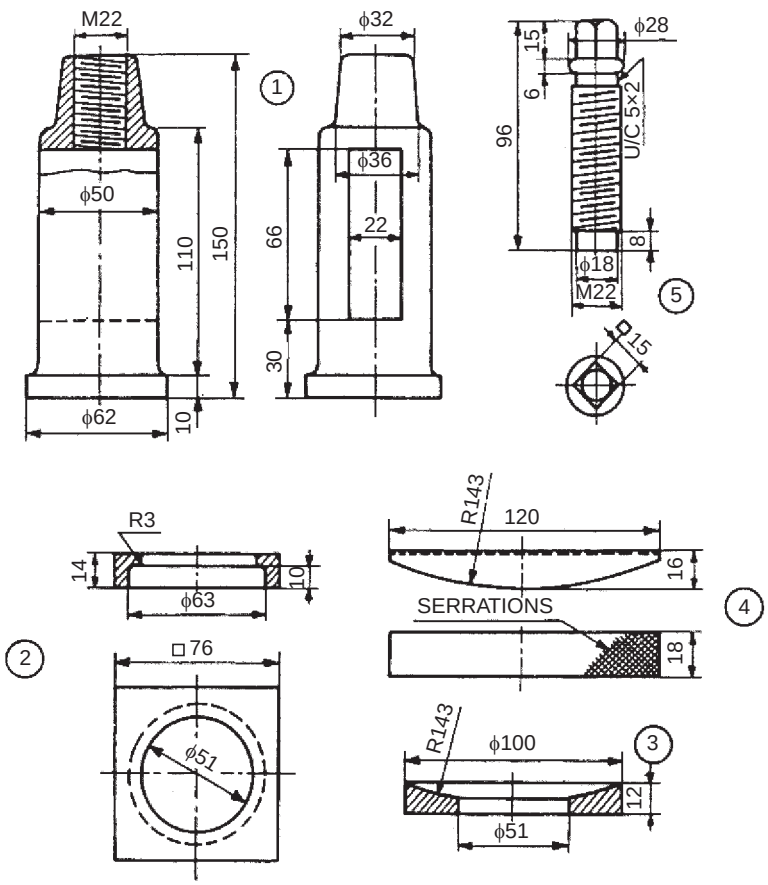

Parts list

No.	Name	Matl	Qty
1	Piller	MCS	1
2	Block	MCS	1
3	Ring	MS	1
4	Wedge	MCS	1
5	Screw	TS	1

Fig. 18.14 Single tool post

Exercise

The details of a lathe square tool post are shown in Fig. 18.15. Assemble the parts and draw, (*i*) sectional view from the front and (*ii*) view from above.

18.3.3 Clapper Block

It is a sub-assembly of the tool head of a shaping machine. It is used for holding the shaper cutting tool. The design of the clapper block is such that it relieves the tool during the return stroke.

www.EngineeringBooksPdf.com

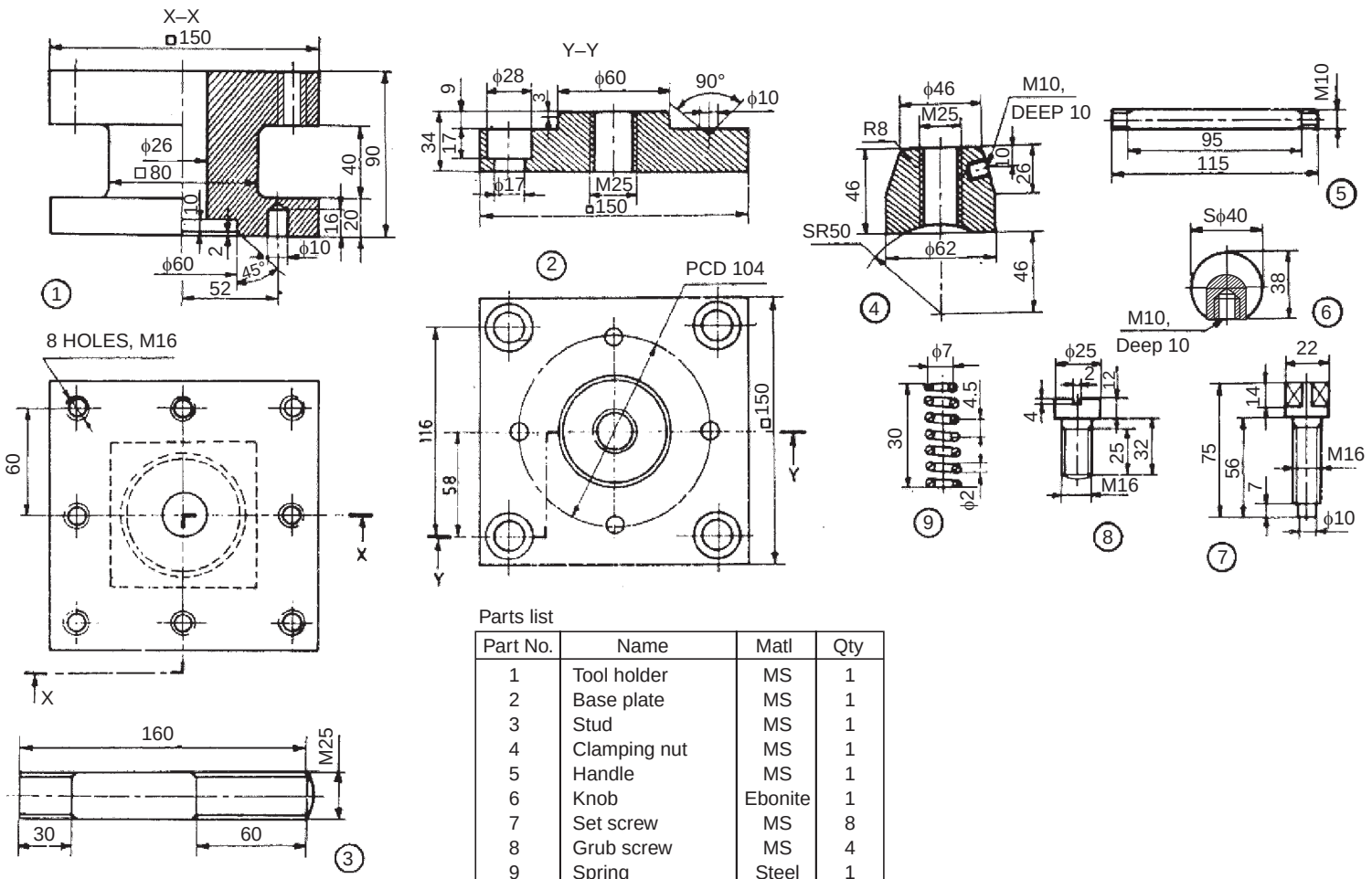

Parts list

Part No.	Name	Matl	Qty
1	Tool holder	MS	1
2	Base plate	MS	1
3	Stud	MS	1
4	Clamping nut	MS	1
5	Handle	MS	1
6	Knob	Ebonite	1
7	Set screw	MS	8
8	Grub screw	MS	4
9	Spring	Steel	1
10	Ball ϕ9	MS	1

Fig. 18.15 Square tool post

www.EngineeringBooksPdf.com

Figure 18.16 shows the details of a clapper block. This consists of a swivel plate 1, attached to the vertical slide of the tool head (Fig. 18.17) of the shaping machine. The drag release plate 2 relieves the tool during the return stroke. The drag release plate carries the tool holder 4 and the tool is fixed in it by means of the tool clamping screw 5. The washer 6 is used over the drag release plate for providing even bearing surface to the tool.

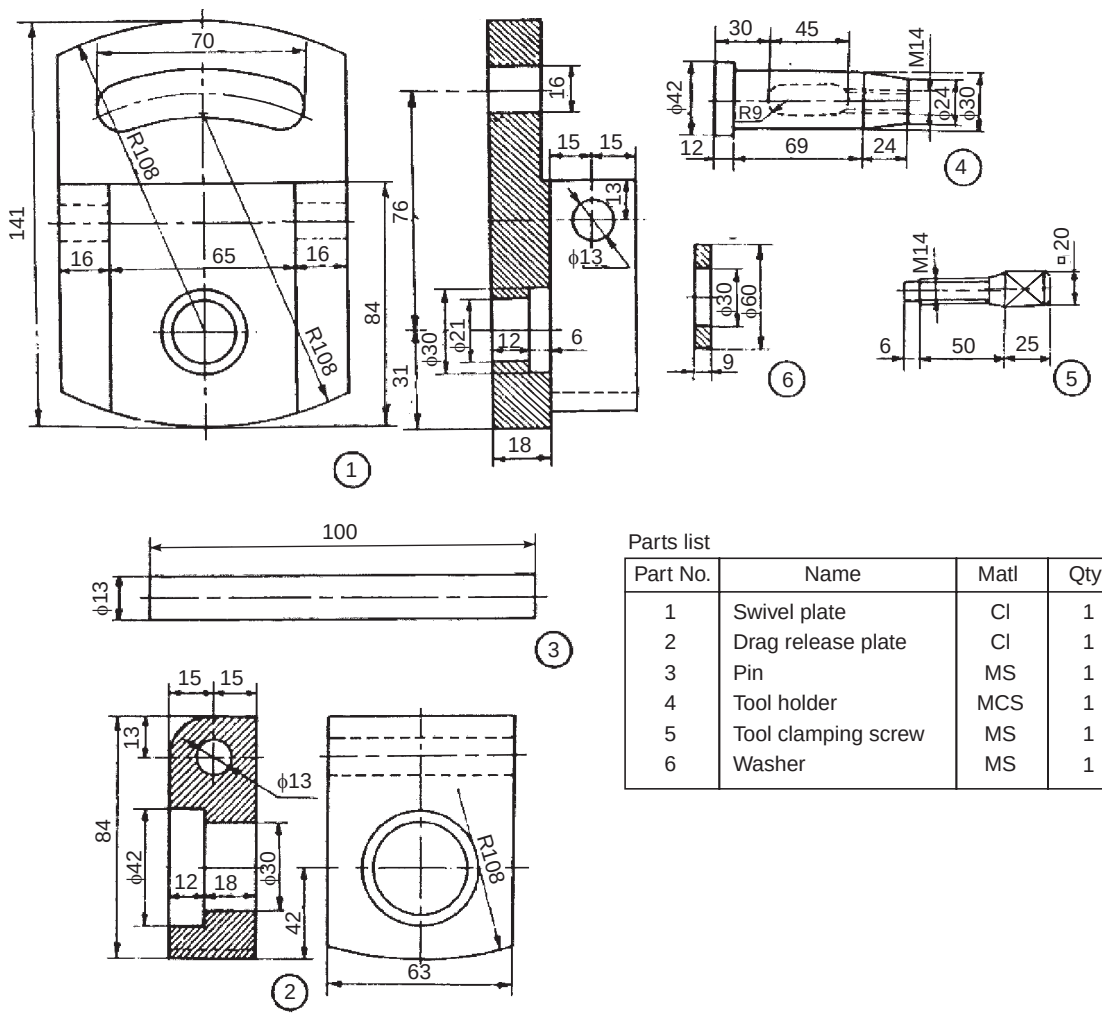

Parts list

Part No.	Name	Matl	Qty
1	Swivel plate	CI	1
2	Drag release plate	CI	1
3	Pin	MS	1
4	Tool holder	MCS	1
5	Tool clamping screw	MS	1
6	Washer	MS	1

Fig. 18.16 Clapper block

Exercise

Figure 18.16 shows the details of a shaper clapper block. Assemble the parts and draw, (*i*) the view from the front and (*ii*) sectional view from the left.

18.3.4 Shaper Tool Head Slide

The shaper tool is fixed to the tool head through a tool holder and a clapper block. Figure 18.17 shows the details of a shaper tool head slide. The back plate 2 is attached to the front face of the

www.EngineeringBooksPdf.com

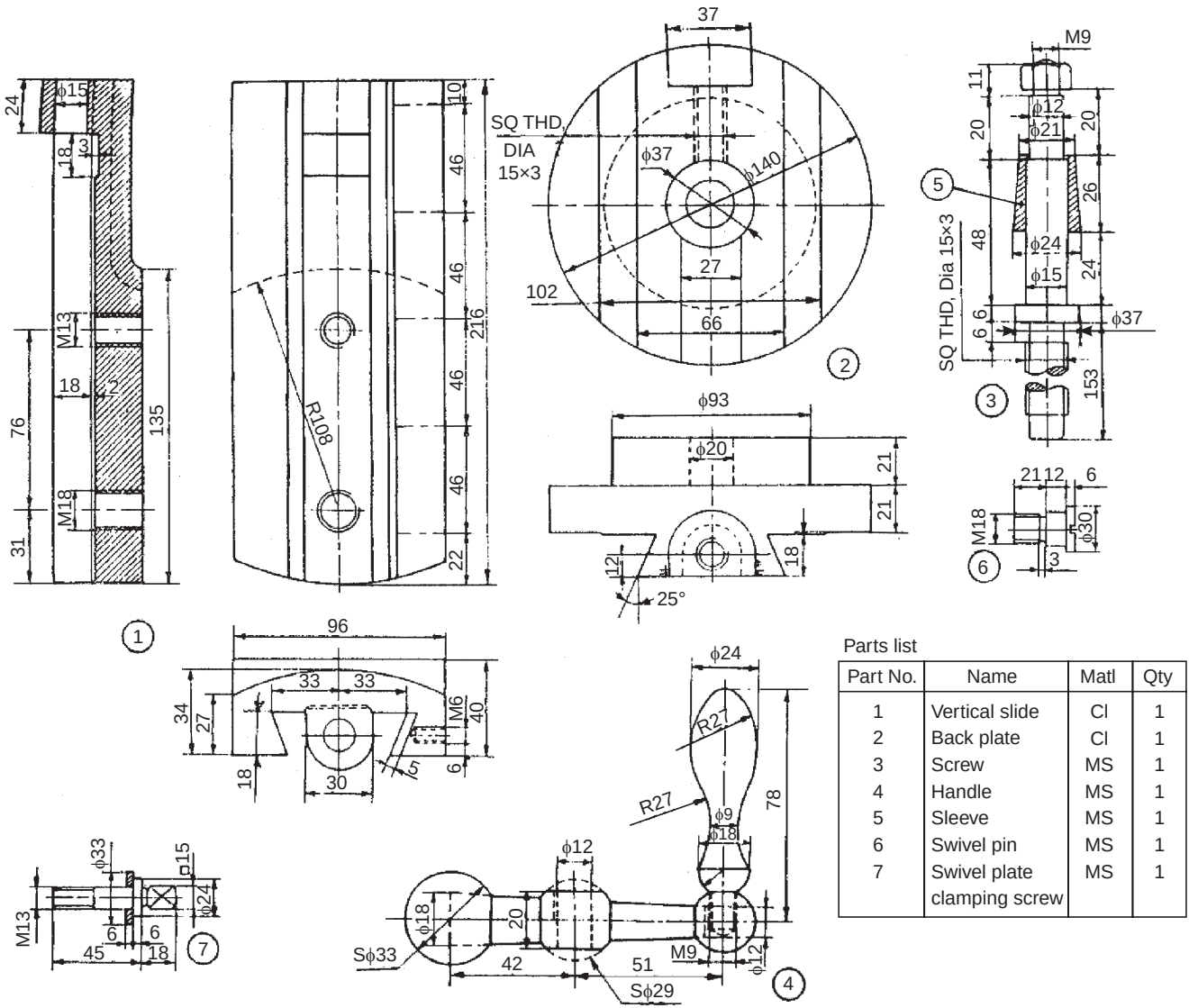

Parts list

Part No.	Name	Matl	Qty
1	Vertical slide	CI	1
2	Back plate	CI	1
3	Screw	MS	1
4	Handle	MS	1
5	Sleeve	MS	1
6	Swivel pin	MS	1
7	Swivel plate clamping screw	MS	1

Fig. 18.17 Shaper tool head slide

www.EngineeringBooksPdf.com

reciprocating ram of the shaper. The vertical slide 1 is fitted to the back plate through the guide-ways and it is positioned on the screw 3 by means of sleeve 5 and the handle 4. When the screw is operated, the vertical slide moves along with the screw. As the slide is rigidly fixed to the screw and permitted to slip, when the screw is rotated, the slide is restricted to have only reciprocating movement. By rotating the back plate about a horizontal axis, the slide can be made to traverse at any desired angle to the vertical, for shaping inclined surfaces. The swivel plate (Fig. 18.16) is pivoted to the slide by the swivel pin 6 and clamped at the desired position by the clamping screw 7.

Exercise

The details of a shaper tool head slide are shown in Fig. 18.17. Using a suitable scale, draw, (*i*) view from the front and (*ii*) sectional view from the right.

18.3.5 Lathe Tail-stock

It is a part of a lathe machine and is used to support lengthy jobs. To accommodate works of different lengths between centres, the tail-stock may be moved on the lathe bed to the required position and clamped by means of a clamping bolt.

Figure 18.18 shows various parts of a tail-stock. The barrel 2 is fitted into the bore of the tail-stock body 1 and is prevented from rotation by the feather key 9 placed underneath of it. The barrel has a threaded portion at its end and the spindle 3 is inserted into the barrel through this. The hand wheel 6 is mounted on the spindle by a key and is retained in position by a nut. The spindle bearing 5 is placed between the hand wheel and the tail-stock body. A tapered hole provided at the front end of the barrel, receives the dead centre 4 or a tapered shank of the drill or reamer.

When the hand wheel is operated, the barrel is made to move in or out of the tail-stock body. In the required position of the barrel, clamping may be made by means of the clamping lever 7 and stud 8 which is fitted to the tail-stock body. The spindle bearing is fixed to the body by means of the screws 10.

Exercise

Figure 18.18 shows the details of a lathe tail-stock. Assemble the parts and draw to a suitable scale, (*i*) sectional view from the front and (*ii*) view from the left.

18.3.6 Milling Machine Tail-stock

Jobs requiring milling operations in relation to their axes of rotation, are usually supported between the centres of the dividing head and adjustable centre provided in the tail-stock. The parts of a milling machine tail-stock are shown in Fig. 18.19. This is similar to the lathe tail-stock.

The screw 4 is introduced into the threaded hole of body 1. Centre 2 is inserted into the body such that, the hole provided in it enters onto the screw 4. Hand wheel 3 is mounted on the screw 4, by using the key 8 and fixed in position by using washer 6 and nut 7.

By operating the hand wheel, the centre can be given the required movement/fine adjustment, while clamping the job between the centres. After adjustment, the centre can be locked by the screw 5, which is introduced into the body, prior to the location of the centre in the body. Figure 19.11 shows the assembly drawing.

Exercise

Assemble the parts of the milling machine tail-stock, shown in Fig. 18.19 and draw, (*i*) sectional view from the front and (*ii*) view from the right.

www.EngineeringBooksPdf.com

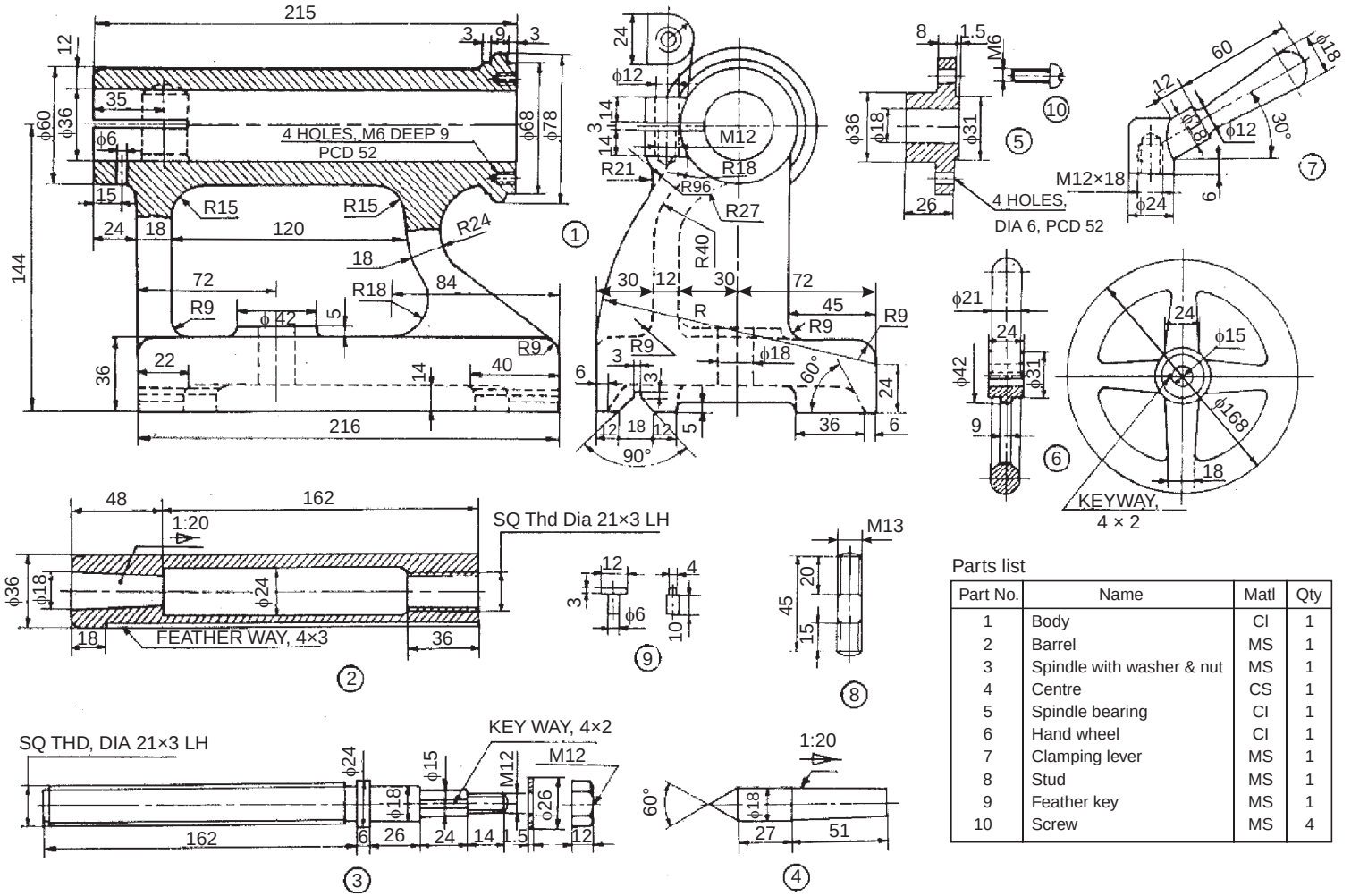

Parts list

Part No.	Name	Matl	Qty
1	Body	CI	1
2	Barrel	MS	1
3	Spindle with washer & nut	MS	1
4	Centre	CS	1
5	Spindle bearing	CI	1
6	Hand wheel	CI	1
7	Clamping lever	MS	1
8	Stud	MS	1
9	Feather key	MS	1
10	Screw	MS	4

Fig. 18.18 Lathe tail-stock

www.EngineeringBooksPdf.com

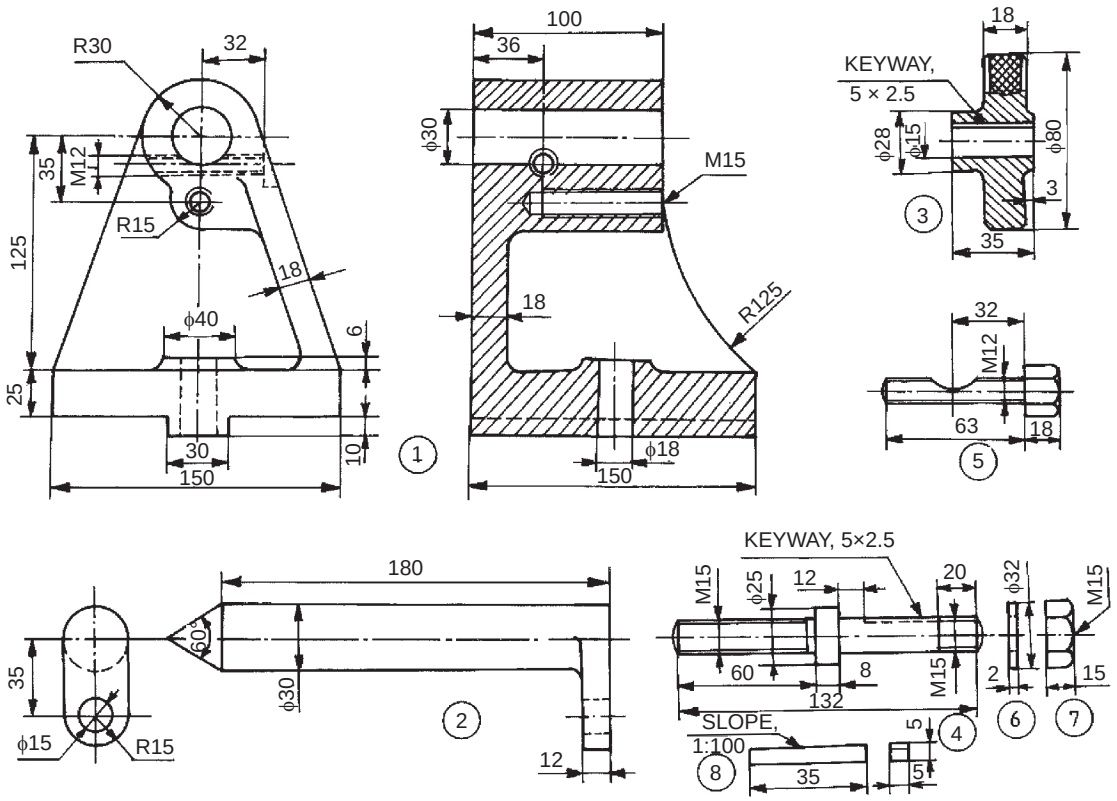

Parts list

Sl. No.	Name	Matl.	Qty.
1	Body	CI	1
2	Centre	Case hardened alloy steel	1
3	Hand wheel	Cast steel	1
4	Screw	MS	1
5	Screw	MS	1
6	Washer	MS	1
7	Nut	MS	1
8	Key	MS	

Fig. 18.19 Milling machine tail-stock

18.3.7 Revolving Centre

When long bars are machined on a lathe, they are suppported on two centres. one of which is called a live centre and the other, a dead centre, fixed in the tail-stock. The live centre fits into the main spindle and revolves with the work it supports. Because of the relative motion between the work piece and the dead centre in the tail-stock barrel, over-heating and wear of the centre takes place in the long run. To eliminate this, the dead centre is replaced with a live or anti-friction bearing centre, which revolves with the work like a live centre.

Figure 18.20 shows the details of a revolving centre using antifriction bearings. The radial bearing 6 and thrust bearing 7 used in the design are meant for resisting the possible radial and axial loads respectively. The sleeve 4 is press fitted in the barrel 1 to provide end support to the

www.EngineeringBooksPdf.com

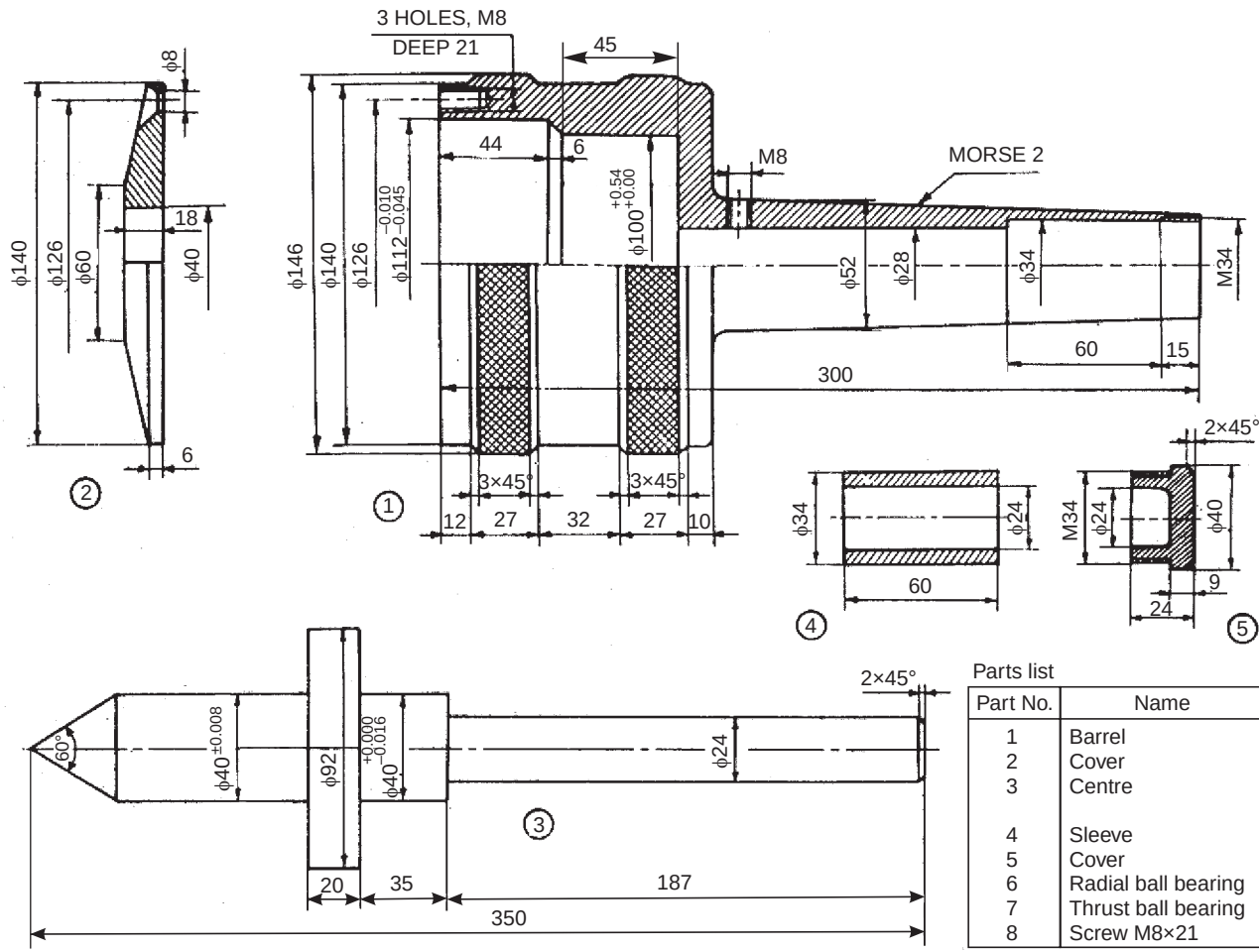

Parts list

Part No.	Name	Matl	Qty
1	Barrel	MS	1
2	Cover	MS	1
3	Centre	Alloy steel	1
4	Sleeve	MS	1
5	Cover	MS	1
6	Radial ball bearing	208	1
7	Thrust ball bearing	308	1
8	Screw M8×21	MS	3

Fig. 18.20 Revolving centre

www.EngineeringBooksPdf.com

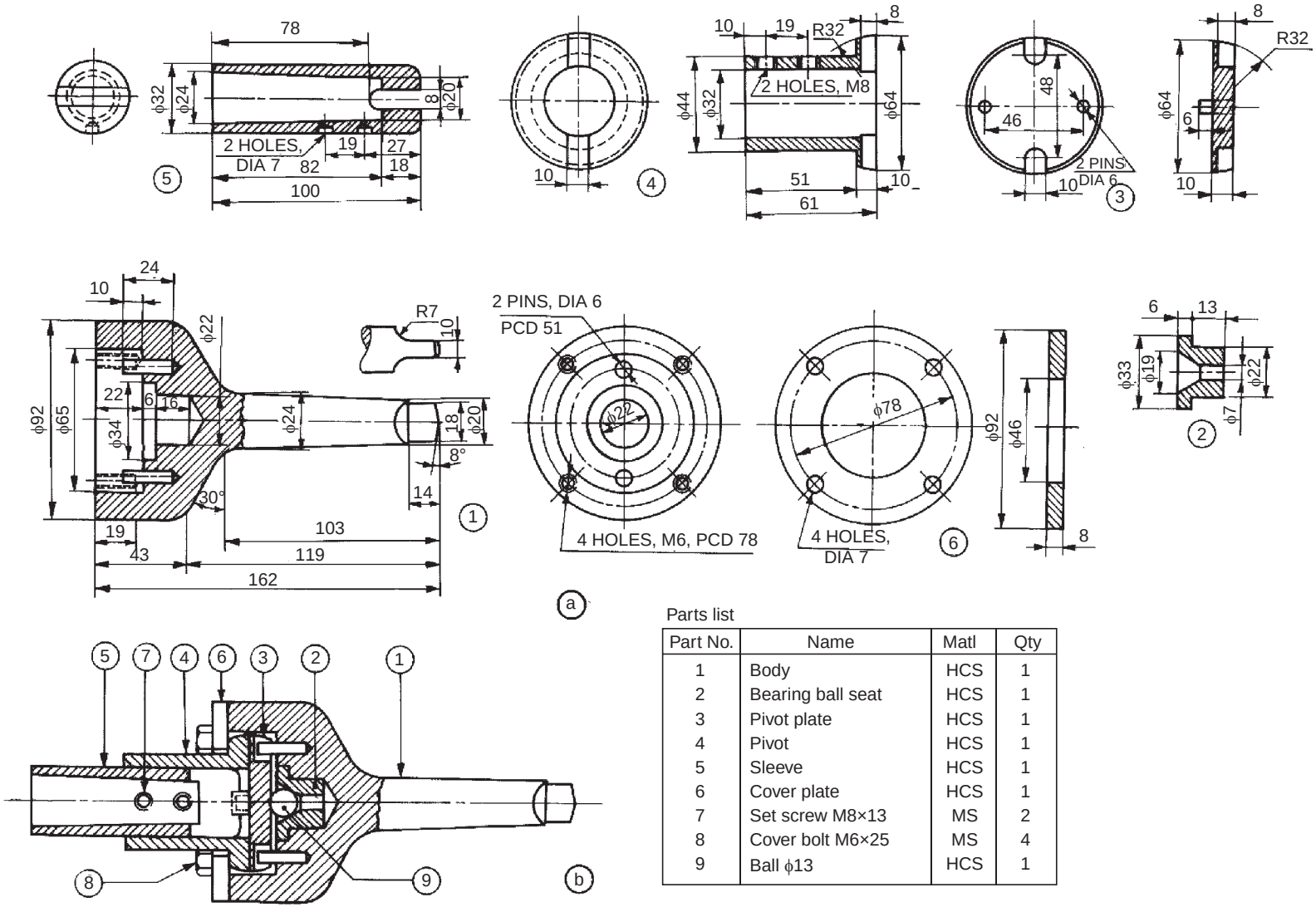

Parts list

Part No.	Name	Matl	Qty
1	Body	HCS	1
2	Bearing ball seat	HCS	1
3	Pivot plate	HCS	1
4	Pivot	HCS	1
5	Sleeve	HCS	1
6	Cover plate	HCS	1
7	Set screw M8×13	MS	2
8	Cover bolt M6×25	MS	4
9	Ball ϕ13	HCS	1

Fig. 18.21 Floating reamer holder

www.EngineeringBooksPdf.com

centre 3. The sleeve is positioned in the barrel by the cover 5. Another cover 2 is fixed on the front side of the barrel by means of the screws 8 to retain the radial bearing in position.

Exercise

Assemble the parts of the revolving centre, shown in Fig. 18.20 and draw a half sectional view from the front.

18.3.8 Floating Reamer Holder

A reamer provides a ready means of sizing and finishing a hole after drilling or boring. However, greater accuracy is ensured when the reamer is carried in a holder, which allows it to float or to have a certain latitude of free movement. If the reamer is rigidly held and if there is any small error in the alignment, the reamer will be unable to follow the bored hole, resulting in inaccuracy. The floating reamer holder, by permitting a certain amount of freedom, allows the reamer to follow the axis of the hole it is reaming.

The details of a floating reamer holder are shown in Fig. 18. 21*a*. The sleeve 5 is rigidly fixed in the pivot 4 by the set screws 7. This assembly is fitted into the body 1, by making use of the pivot plate 3, bearing ball seat 2 and the steel ball 9. This ensures floating condition for the reamer holder. This assembly is held in place by the cover plate 6 to the body of the holder. Figure 18.21*b* shows the assembly drawing of the floating reamer holder.

Exercise

The details of a floating reamer holder used on a lathe are shown in Fig. 18.21*a*. Assemble the parts and draw the following views to a suitable scale:

(*i*) Half sectional view from the front, with top half in section, and

(*ii*) View from the left.

18.3.9 Machine Vice

The details of a plain machine vice are shown in Fig. 18.22. It consists of the base 1 which is clamped to the machine table using two T-bolts. The sliding block 3 is fixed in the centre slot of the base by means of the guide screw 4. The movable jaw 2 is fixed to the sliding block with four screws 8 and 7. One of the serrated plates 5 is fixed to the jaw of the base by means of screws 6 and the other to the movable jaw by the screws 7. One end of the guide screw is fixed to the base by means of the washer 9 and nut 10 (not shown in figure). The movable jaw is operated by means of a handle (not shown) which fits onto the square end of the guide screw.

Exercise

Figure 18.22 shows the details of a machine vice. Assemble the parts and draw, (*i*) sectional view from the front, (*ii*) view from above and (*iii*) view from the left. Use suitable scale.

18.3.10 Swivel Machine Vice

A machine vice is a work holding device, used in machines such as drilling, milling, etc. A swivelling type machine vice permits swivelling about its vertical axis, so that the work may be clamped at any angular position required in the machining operation. T-bolts (not shown) are used through the base plate, to fix the vice to the machine table.

Figure 18.23 shows the details of a swivel machine vice. It consists of the swivel body 1 which is fixed to the base plate 3 by two bolts 6. The heads of the bolts are so shaped, that they can slide freely in the circular T-slot of the base plate. The graduations marked in degrees on the flange of the base plate, facilitate setting of the swivel body at any desired angle.

The swivel body has a fixed jaw at one end. The movable jaw 2 is mounted on the swivel body by the screw 4. After the screw is inserted fully, it is held in position by a nut and pin to prevent its axial motion. Thus, when the screw is turned, the movable jaw slides on the swivel body guide ways. Steel jaw plates 5 are fitted to jaws by machine screws.

www.EngineeringBooksPdf.com

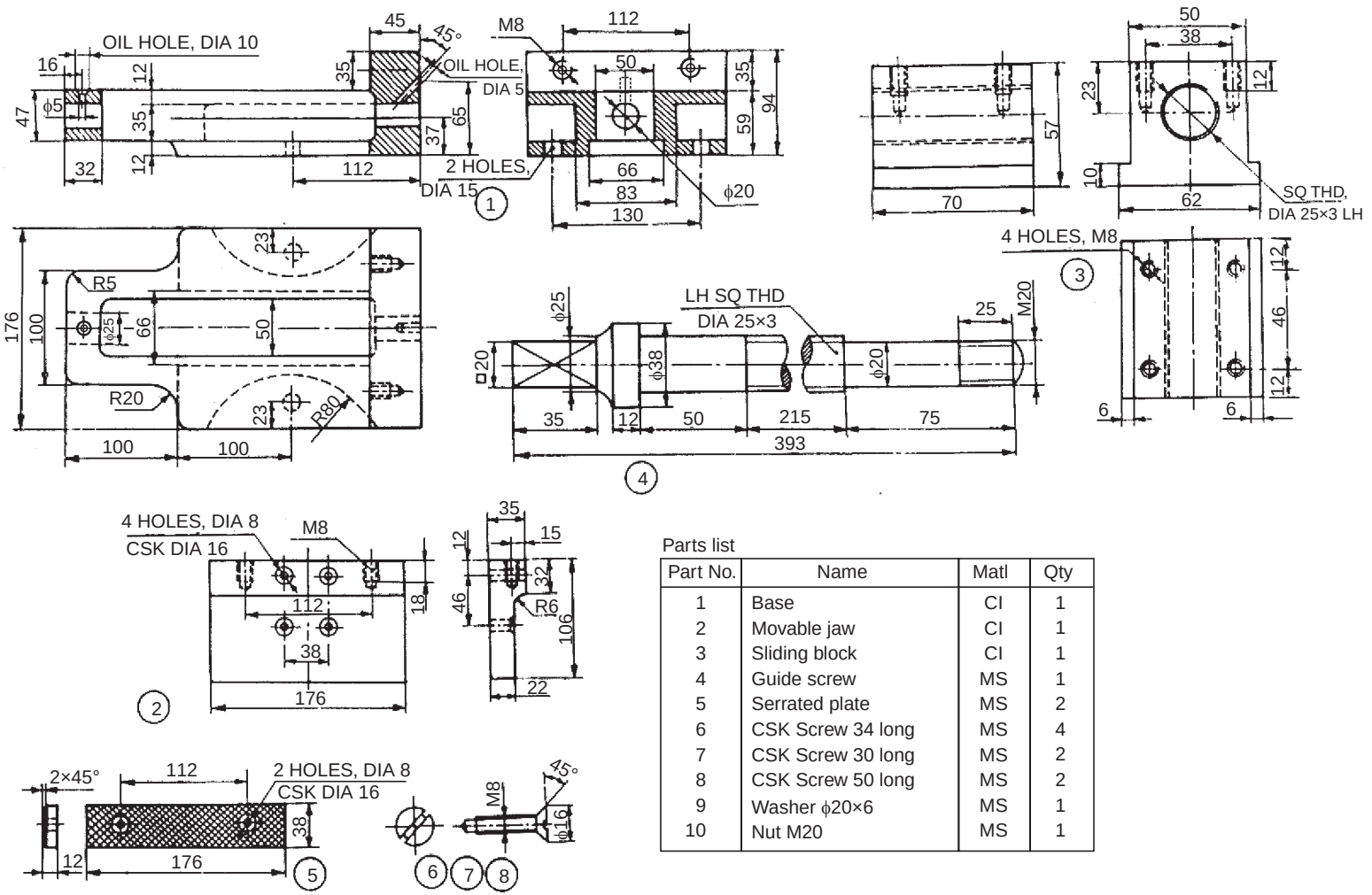

Parts list

Part No.	Name	Matl	Qty
1	Base	CI	1
2	Movable jaw	CI	1
3	Sliding block	CI	1
4	Guide screw	MS	1
5	Serrated plate	MS	2
6	CSK Screw 34 long	MS	4
7	CSK Screw 30 long	MS	2
8	CSK Screw 50 long	MS	2
9	Washer ϕ20×6	MS	1
10	Nut M20	MS	1

Fig. 18.22 Machine vice

www.EngineeringBooksPdf.com

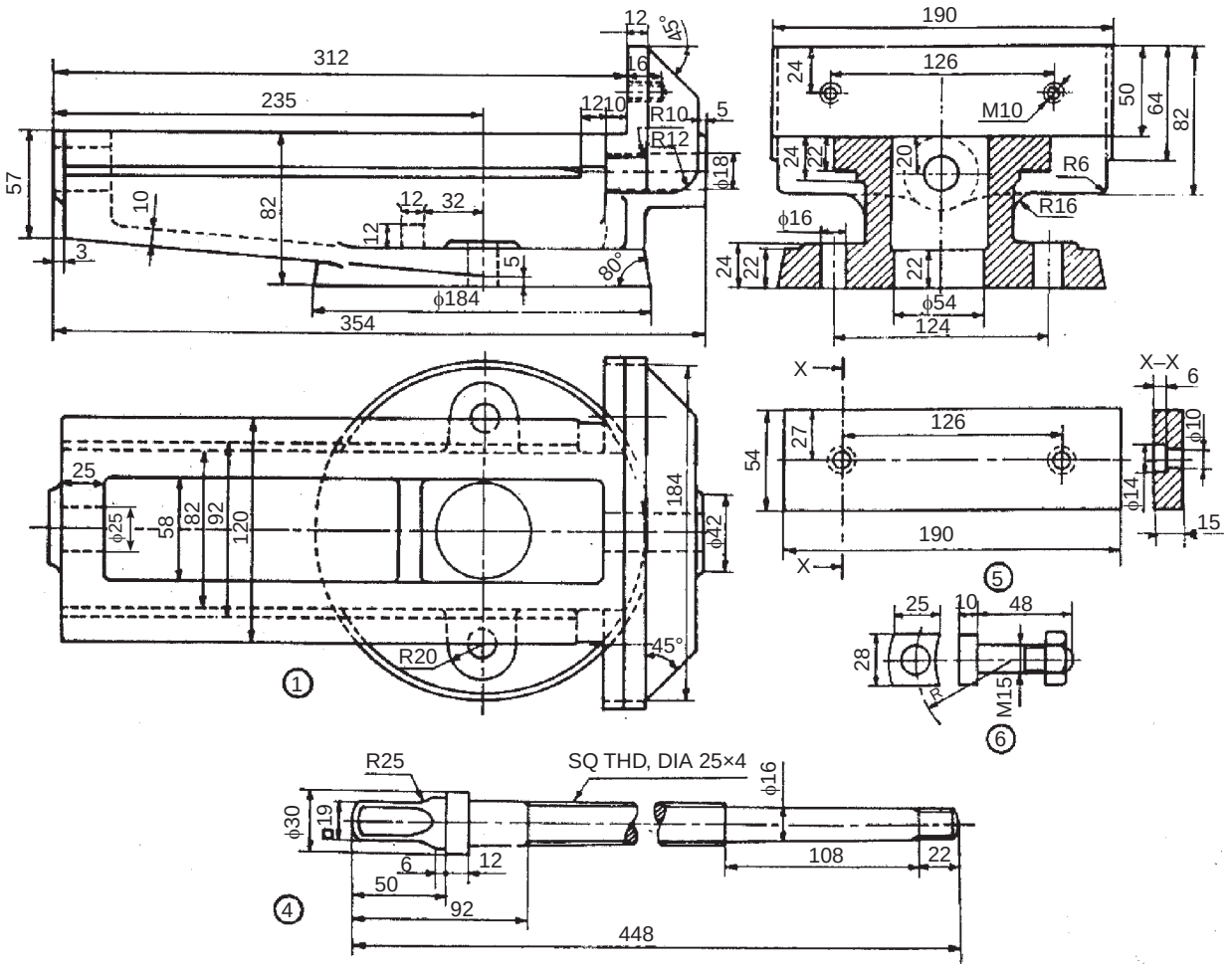

Fig. 18.23 Swivel machine vice (*contd.)*

www.EngineeringBooksPdf.com

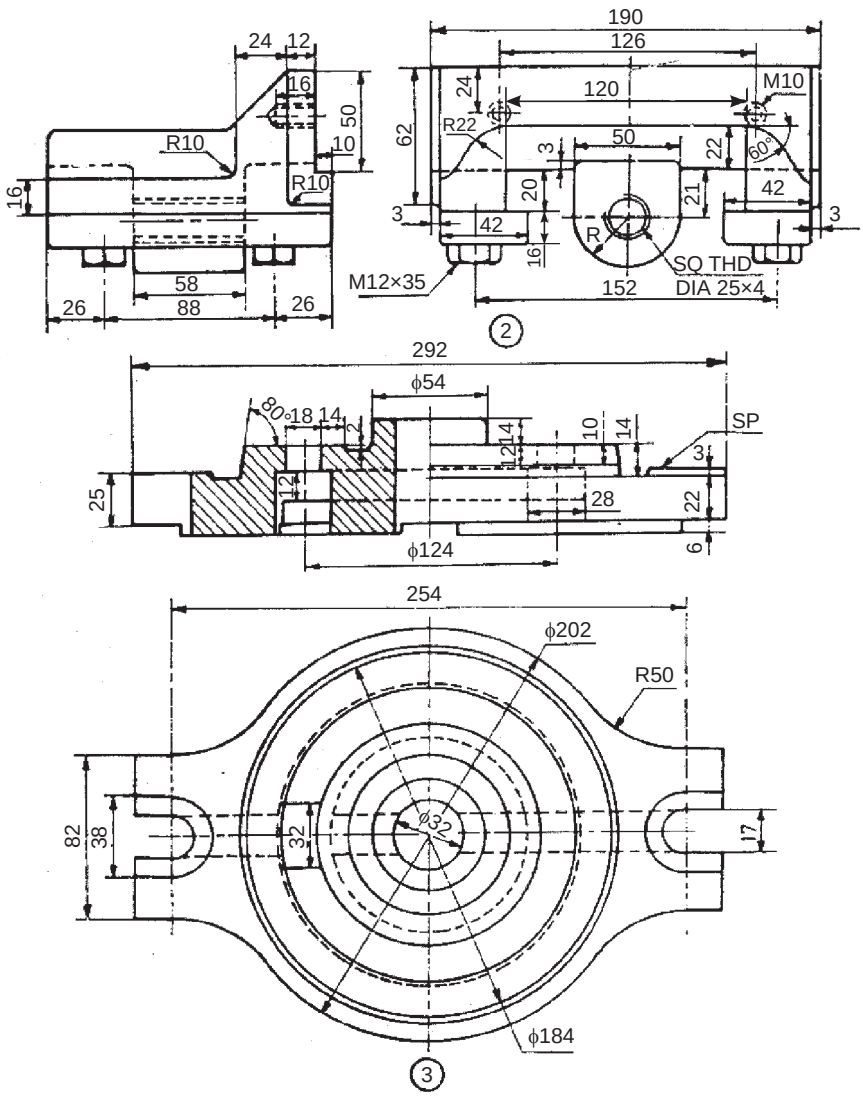

Parts list

Part No.	Name	Matl	Qty
1	Body	CS	1
2	Moving jaw	CS	1
3	Swivel base	CI	1
4	Screw rod	MS	1
5	Jaw plate	HCS	2
6	Clamping bolt	MS	2

Fig. 18.23 Swivel machine vice

www.EngineeringBooksPdf.com

Exercise

Figure 18.23 represents the details of a swivel machine vice. Assemble the parts and draw, (*i*) sectional view from the front, (*ii*) view from above and (*iii*) sectional view from the left, with cutting plane passing through the axis of the clamping bolts.

18.3.11 Drill Jig

A jig is a work holding and tool guiding device which may be used for drilling, reaming, boring and similar operations in mass production.

Figure 18.24 shows the details of a drill jig used to produce six holes, spaced equally in a circular flange. The design allows for quick loading and unloading of work pieces. For unloading, the top nut 6 is loosened, the latch washer 8 swivelled out of zone and then the jig plate 3 is lifted to remove the work piece from its seating.

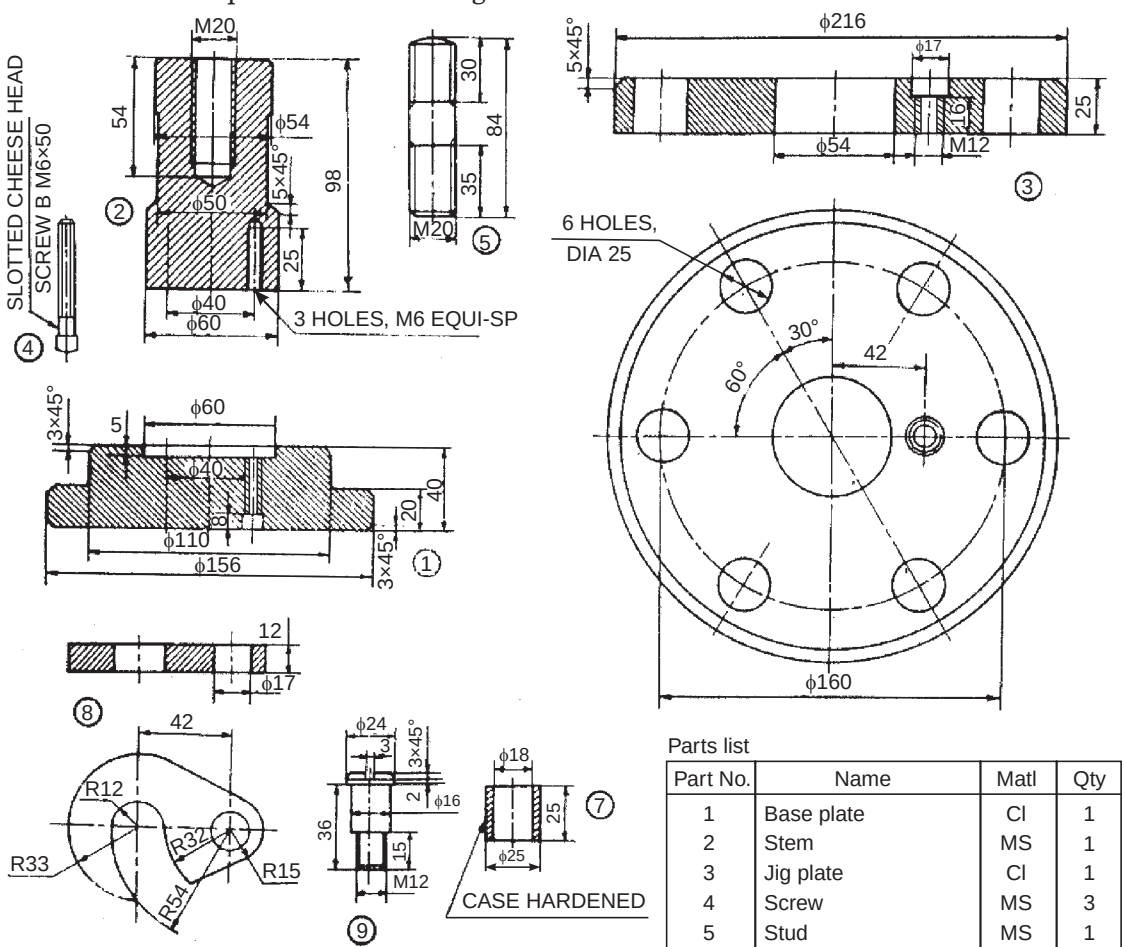

Parts list

Part No.	Name	Matl	Qty
1	Base plate	CI	1
2	Stem	MS	1
3	Jig plate	CI	1
4	Screw	MS	3
5	Stud	MS	1
6	Nut M20	MS	1
7	Bush case hardened	Steel	6
8	Latch washer	MS	1
9	Screw	MS	1

Fig. 18.24 Drill jig

It may be noted that the jig plate is so designed, that the nut overall size is less than the size of the central hole. This makes the loading and unloading easy, without totally removing the

www.EngineeringBooksPdf.com

nut from the stud 5. It may further be noted that the work piece is machined at the required surface before loading in the jig. This is so, because, certain machined surfaces of the work piece may be used for locating it in the jig.

Exercise

Assemble the parts of the drill jig shown in Fig. 18.24 and draw, (*i*) sectional view from the front and (*ii*) view from above.

18.3.12 Indexing Drill Jig

Figure 18.25 shows the details of an indexing drill jig used to drill six holes in the work piece (13).

The jig consists of the bracket 1, on the top of which is fixed the jig plate 2. The plain drill bush 6 and the slip bush 7 are located in the jig plate. The plain bush is fixed with interference fit in the plate, whereas the slip bush is provided with sliding fit in the plate and is removed to facilitate loading of the job. The job is located in the jig by means of the locater 3 which is fastened to the bracket 1 by means of the nut 11. Quick loading and unloading of the job is carried out by means of the quick acting knob 4. Two holes are drilled on the job through the bushes 6 and 7. The location of the remaining holes, which are at 90° intervals is obtained by the simple indexing mechanism provided by the ball catch assembly 5. The ball catch assembly consists of a M.S plate which is fastened to the bracket by means of the socket headed screws 10. The required indexing is obtained by means of the spring 9, loaded ball 8, which is a part of the ball catch assembly. After the first operation, when the job is rotated in clockwise direction, the ball catch assembly facilitates location of the job at intervals of 90° rotation.

Exercise

The details of an indexing drill jig are given in Fig. 18.25. Draw, (*i*) sectional view from the front, (*ii*) view from above and (*iii*) view from the right.

18.3.13 Self-centring Chuck

The self-centring chuck is a work holding device mounted on the headstock spindle of a lathe. It automatically centres the workpiece by the three jaws, moving simultaneously to and from the centre. Regular shaped objects such as rounds and hexagons are quickly held and centred in three jaw self-centring chucks.

Figure 18.26*a* shows the two views of a self-centring lathe chuck. The details of the assembly are given in Fig. 18.26*b*. It consists of a face plate 1, and the scroll plate 3 is fitted into the circular recess at the back of the face plate. Three pinions 4 are mounted in position in the face plate such that, their teeth engage with those on the back of the scroll plate. The back plate 2 is fastened to the face plate by six screws 7. This assembly is fastened to the flange 5 by three socket headed screws 8. The three jaws 6 are then engaged with the scroll plate. By rotating any one pinion by a chuck key (not shown), the three jaws move in the radial direction either to or from the centre. The threaded hole in the flange facilitates the mounting of the chuck in the threaded headstock spindle.

Exercise

Figure 18.26*b* shows the details of a self-centring lathe chuck. Assemble the parts and draw to 1 : 1 scale, the following:

(*i*) The view from the front, as seen from the side of the jaws, and

(*ii*) The half sectional view from the right. Consider suitable local section for showing other details.

18.3.14 Four Jaw Chuck

Four jaw chuck is a device used to hold jobs accurately on a lathe. Unlike three jaw self-centring chuck, it can hold both regular and irregular shapes of objects.

www.EngineeringBooksPdf.com

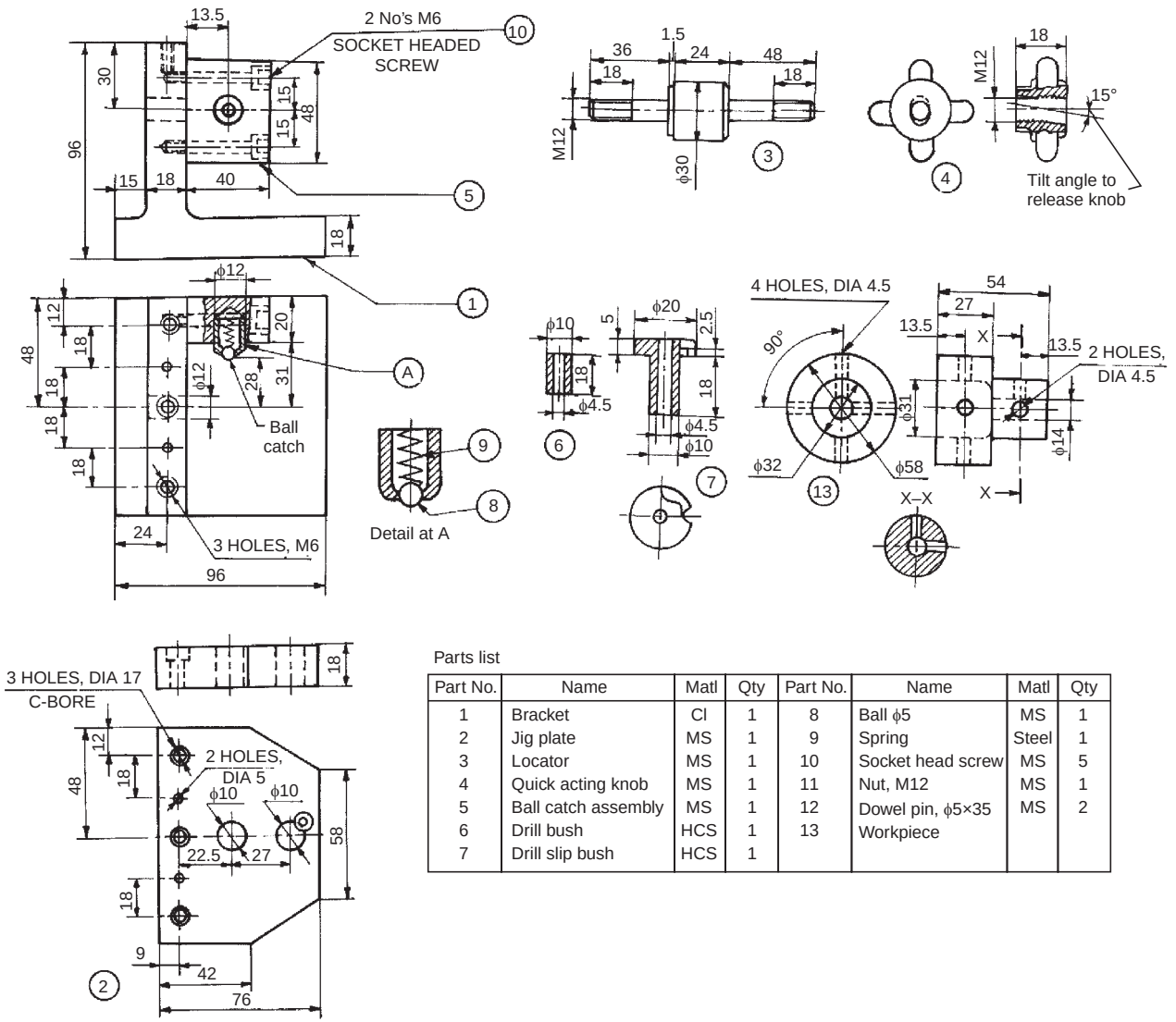

Parts list

Part No.	Name	Matl	Qty	Part No.	Name	Matl	Qty
1	Bracket	CI	1	8	Ball ϕ5	MS	1
2	Jig plate	MS	1	9	Spring	Steel	1
3	Locator	MS	1	10	Socket head screw	MS	5
4	Quick acting knob	MS	1	11	Nut, M12	MS	1
5	Ball catch assembly	MS	1	12	Dowel pin, ϕ5×35	MS	2
6	Drill bush	HCS	1	13	Workpiece		
7	Drill slip bush	HCS	1				

Fig. 18.25 Indexing drill jig

www.EngineeringBooksPdf.com

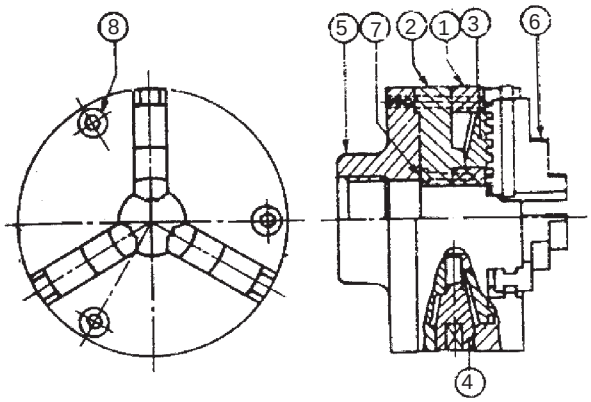

Parts list

Part No.	Name	Matl	Qty
1	Face plate	MS	1
2	Back plate	MS	1
3	Scroll plate	MCS	1
4	Pinion	MCS	3
5	Flange	Cl	1
6	Jaw	MCS	3
7	Socket head screw	—	6
8	Socket head screw	—	3

Fig. 18.26a Self centring chuck

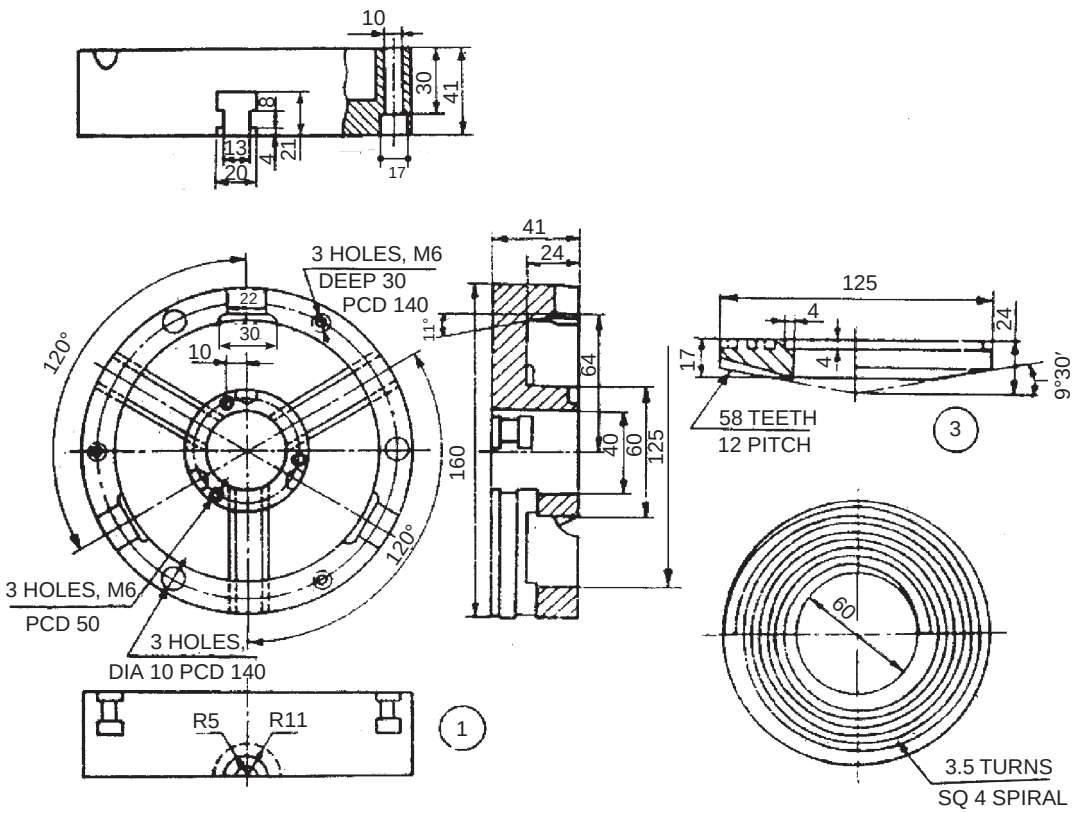

Fig. 18.26b Details of self centring chuck (*contd.)*

www.EngineeringBooksPdf.com

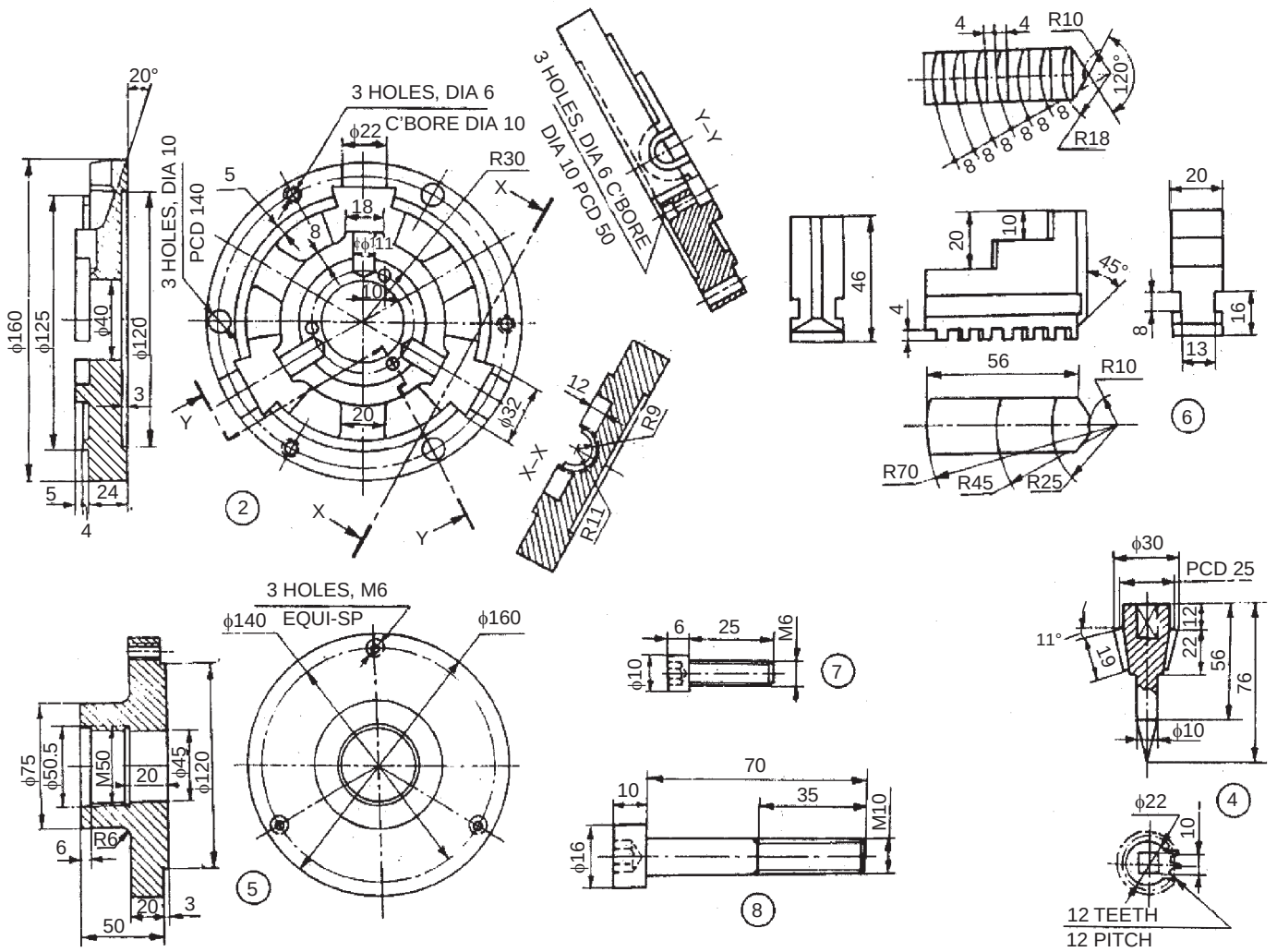

Fig. 18.26b Details of self centring chuck

www.EngineeringBooksPdf.com

The isometric view of a four jaw chuck is shown in Fig. 18.27*a*. It consists of a cast iron body 1, in which is located the screws 3 and the jaws 2 which engage with each other with square threads. The screws are held in position by the locators 4 which prevent their axial movement as well. When the screws are operated by means of a chuck key (not shown), the jaws move towards or away from the centre. Thus, the four jaws can be moved independently to grip the job firmly. The locators are fixed to the body by means of screws 5. The body of the chuck is fixed to the back plate by means of four M 18 bolts. The details of the chuck are illustrated in Fig. 18.27*b*.

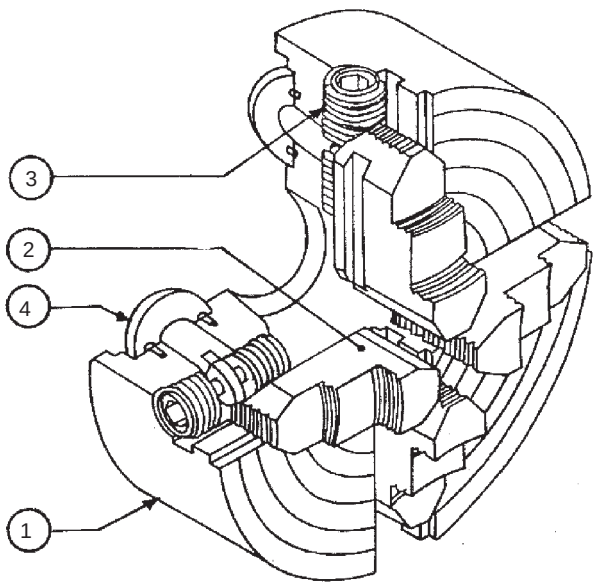

Fig. 18.27a Four jaw chuck

Exercise

The details of a four aw chuck are shown in Fig. 18.27*b*. Assemble the parts and draw, (*i*) the view from the front, as seen from the side of the jaws and (*ii*) the half sectional view from left.

Also consider suitable local section for showing other details.

18.4 VALVES AND BOILER MOUNTINGS

18.4.1 Gate Valve

A valve is used on a fluid line to check or control the fluid flow. It may be operated by the pressure of the fluid or by hand. A number of designs of valves are available; however the gate valve permits the whole area of the passage for the flow of fluid, when fully opened. This minimizes any energy loss in the fluid flow.

Figure 18.28 shows the details of a gate valve. The wedge valve 4 in this design is guided by the control screw 5. When fully opened, the wedge valve clears-off the passage in the valve body 1 for the flow of fluid. The inside union 8 is slipped onto the stem from below. This is placed in the union 2 and screwed. The wedge valve is threaded on the stem and the assembly is placed in the valve body and screwed. The gland is placed from the top of the stem so that it enters the union. It is fixed in position by the union ring 3. Finally, the hand wheel 6 is placed on the square end of the screw and fixed in position by means of a nut (not shown). The gate valve may be fixed for any direction of the fluid flow.

www.EngineeringBooksPdf.com

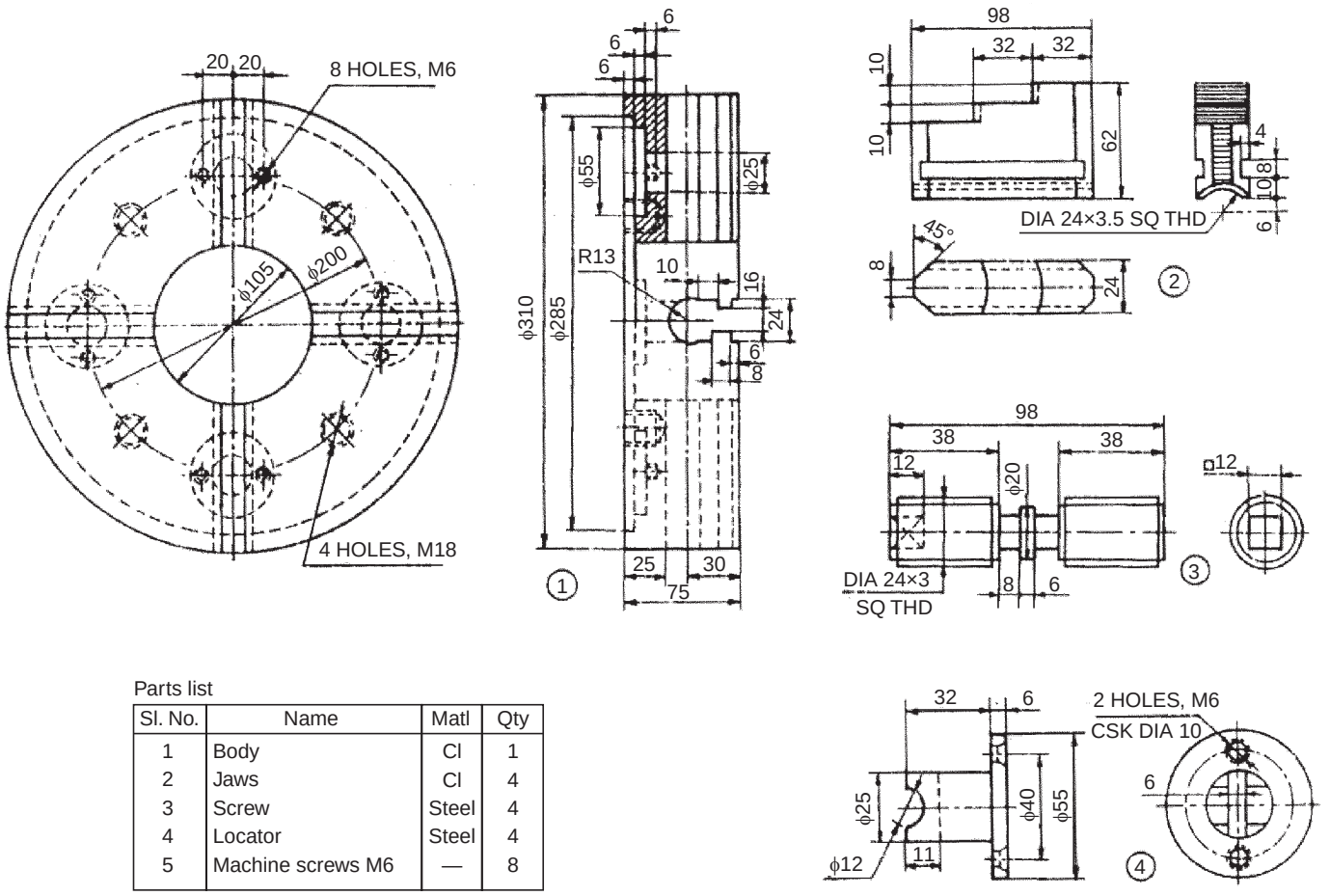

Parts list

Sl. No.	Name	Matl	Qty
1	Body	Cl	1
2	Jaws	Cl	4
3	Screw	Steel	4
4	Locator	Steel	4
5	Machine screws M6	—	8

Fig. 18.27b Details of four jaw chuck

www.EngineeringBooksPdf.com

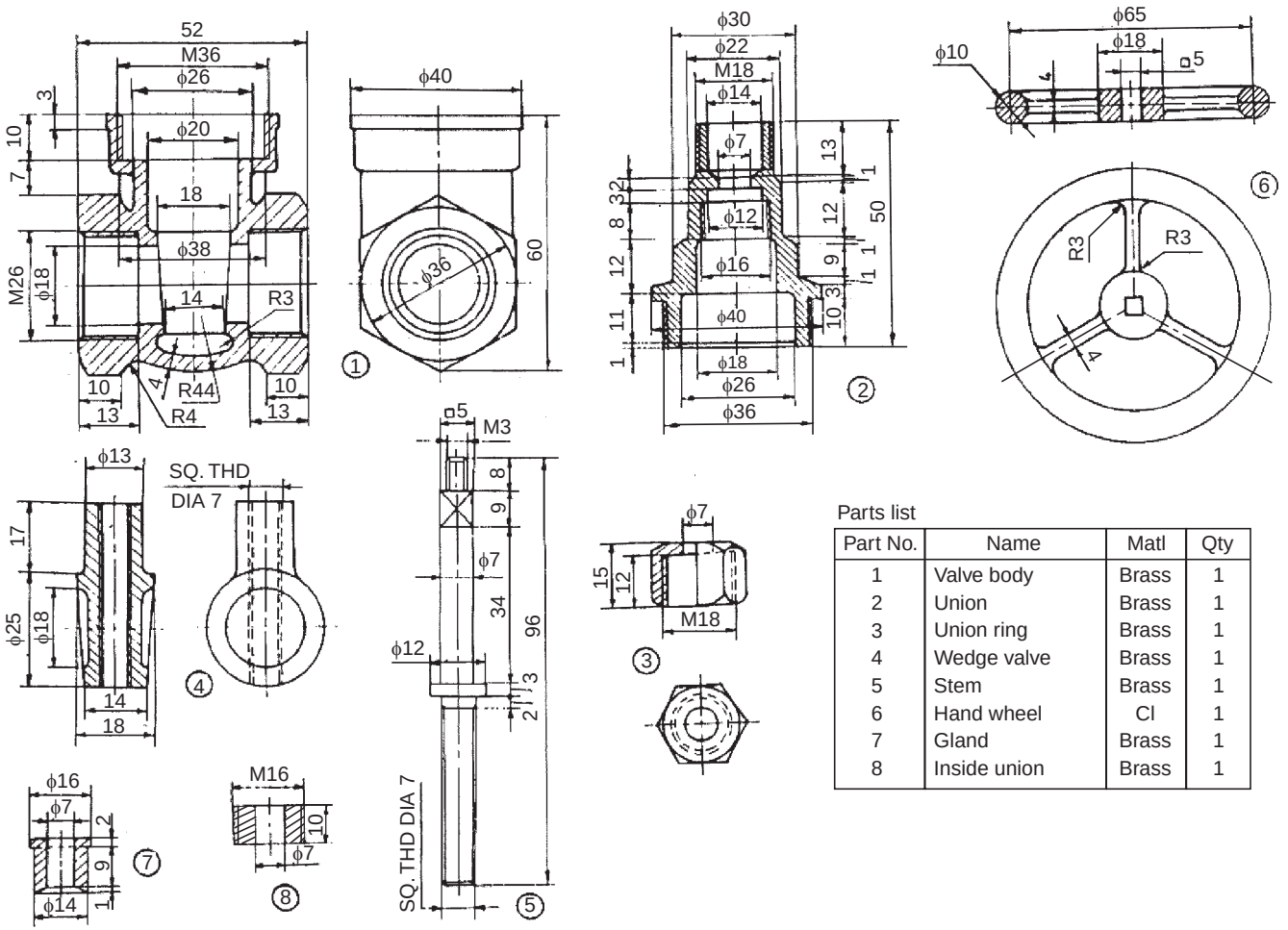

Parts list

Part No.	Name	Matl	Qty
1	Valve body	Brass	1
2	Union	Brass	1
3	Union ring	Brass	1
4	Wedge valve	Brass	1
5	Stem	Brass	1
6	Hand wheel	CI	1
7	Gland	Brass	1
8	Inside union	Brass	1

Fig. 18.28 Gate valve

www.EngineeringBooksPdf.com

Exercise

Figure 18.28 shows the details of a gate valve. Assemble the parts and draw to full scale, (*i*) sectional view from the front, (*ii*) the view from above and (*iii*) the view from the left.

18.4.2 Screw Down Stop Valve

Similar to any other valve, this valve is also used in a fluid line to control the fluid flow. In the fully open position, valve gets lifted by 5 mm from the seat to allow the fluid flow from left to right.

Figure 18.29 shows the details of the screw down stop valve. The sleeve 5 is mounted on the stem 8 by means of actuating screw 9. Valve seat 11 is attached to the collar 6 with the screw 12 and then the collar 6 is screwed onto the sleeve 5, completing the valve assembly. Screwed sleeve 10 is located in the bonnet 2 and this assembly is screwed onto the valve body 1 after slipping onto the stem assembly. Gland 4 is located on the bonnet through the stem and packing 7 (not shown in figure) is used between the bonnet and gland, to stop any leakage of fluid. Gland is secured by the cap nut 3. Hand wheel 13 is mounted on the stem, using the nut 14.

During operation of the hand wheel, the screw 9 either lifts the vlave, opening the fluid passage or screws down the valve, closing the fluid passage. Hence, the name actuating screw.

Exercise

Figure 18.29 shows the details of a screw down stop valve. Assemble the parts and draw, (*i*) sectional view from the front and (*ii*) view from above.

18.4.3 Non-return Valve (light duty)

Valve is a device used for regulating the flow of fluid. In the non-return valve, the pressure of the fluid allows the flow in one direction only.

When the inlet pressure of the fluid is greater than the pressure at the top of the valve, it gets lifted and allows the fluid to flow past. However, as the fluid pressure builds-up more at the top; the flow ceases and the fluid will not be permitted in the reverse direction, due to shutting of the valve automatically. It is used in boiler feed water system.

Figure 18.30 shows the details of a non-return valve. The fluid enters at the bottom of the valve and leaves from the side. It consists of a body 1 with flanges at right angle, for the purpose of mounting the same. The valve seat 3 is introduced into the body from top and secured in place by set-screw 6. The valve 4 is also introduced from top and located in the valve seat. The valve seat allows free sliding of the valve in it. The studs 5 are first screwed into the body and after placing the cover 2, it is tightened with nuts.

As water with pressure enters at the bottom of the valve, the valve gets lifted in the valve seat, allowing free flow of water through the exit. However, the amount of lift of the valve is controlled by the cover.

Exercise

The part drawings of a non-return valve are shown in Fig. 18.30. Assemble the parts and draw, (*i*) half sectional view from the front, (*ii*) view from the left and (*iii*) view from above.

18.4.4 Non-return Valve

When a valve is operated by the pressure of a fluid, it is called a non-return valve, because, due to the reduction in the pressure of the fluid, the valve automatically shuts-off, ensuring non-return of the fluid. Figure 18.31*a* shows a brass/gun metal valve with a bevelled edge on the valve seat. The isometric view of the inverted valve shows the details of the webs. However, in the non-return valve, a separate valve seat is not provided.

www.EngineeringBooksPdf.com

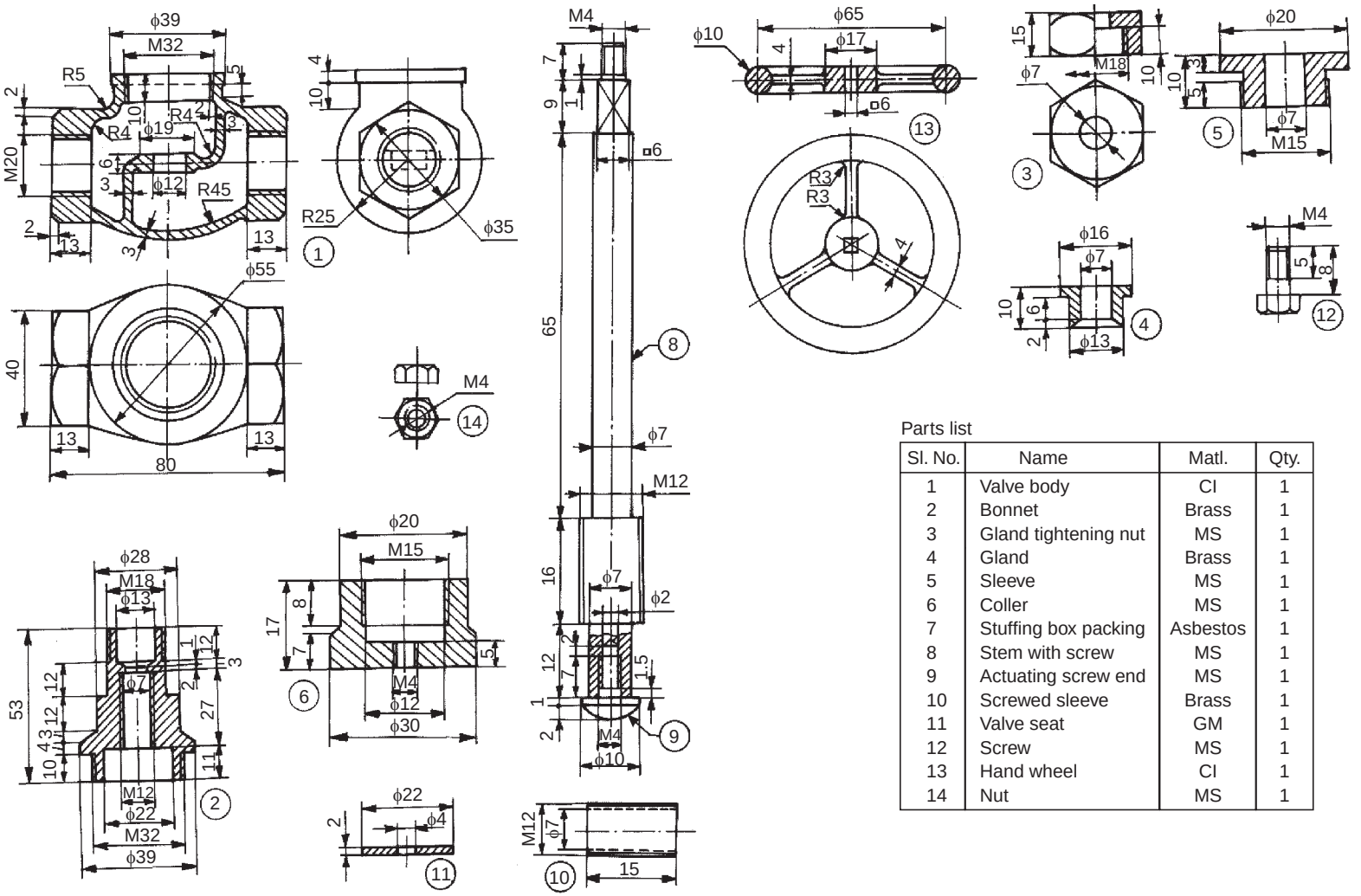

Parts list

Sl. No.	Name	Matl.	Qty.
1	Valve body	CI	1
2	Bonnet	Brass	1
3	Gland tightening nut	MS	1
4	Gland	Brass	1
5	Sleeve	MS	1
6	Coller	MS	1
7	Stuffing box packing	Asbestos	1
8	Stem with screw	MS	1
9	Actuating screw end	MS	1
10	Screwed sleeve	Brass	1
11	Valve seat	GM	1
12	Screw	MS	1
13	Hand wheel	CI	1
14	Nut	MS	1

Fig. 18.29 Screw down stop valve

www.EngineeringBooksPdf.com

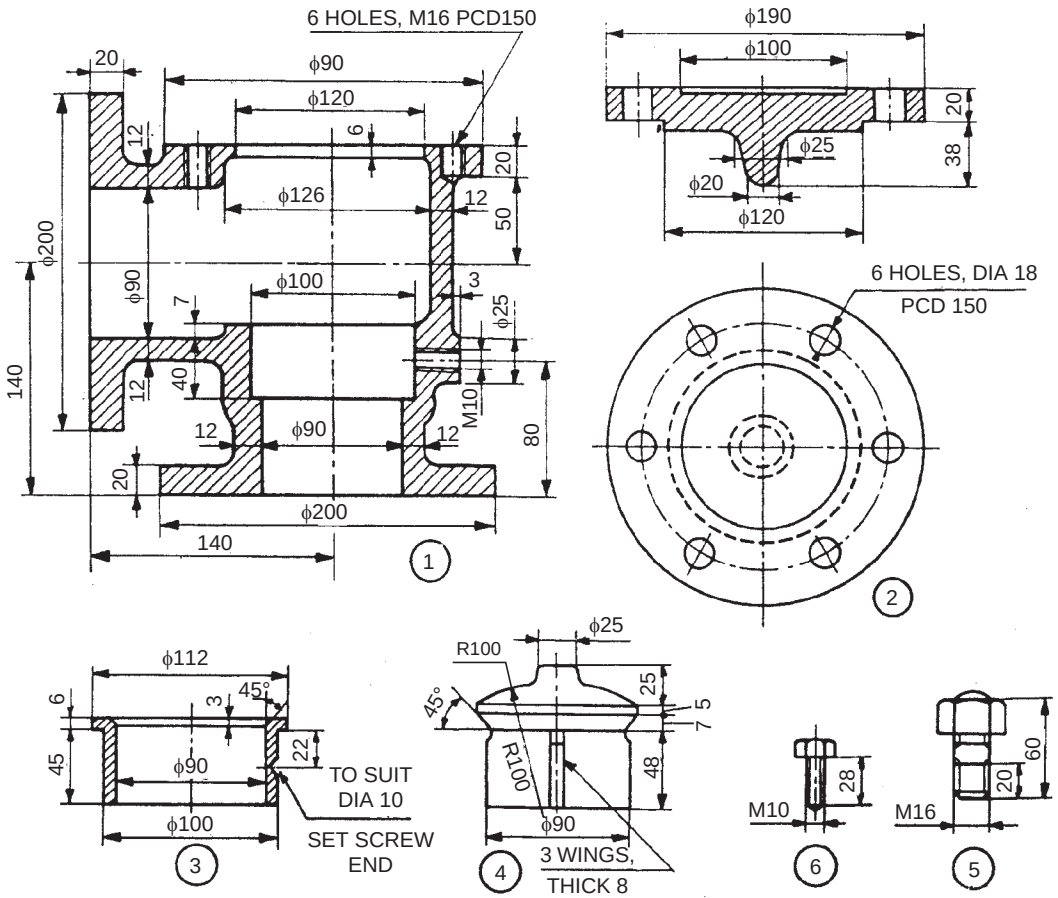

Parts list

No.	Name	Matl	Qty
1	Body	Brass	1
2	Cover	Brass	1
3	Valve seat	Bronze	1
4	Valve	Brass	1
5	Stud with nut	MS	6
6	Set screw	MS	1

Fig. 18.30 Non-return valve (Light duty)

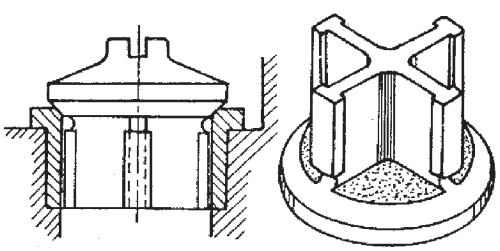

Fig. 18.31a Valve and the seat

www.EngineeringBooksPdf.com

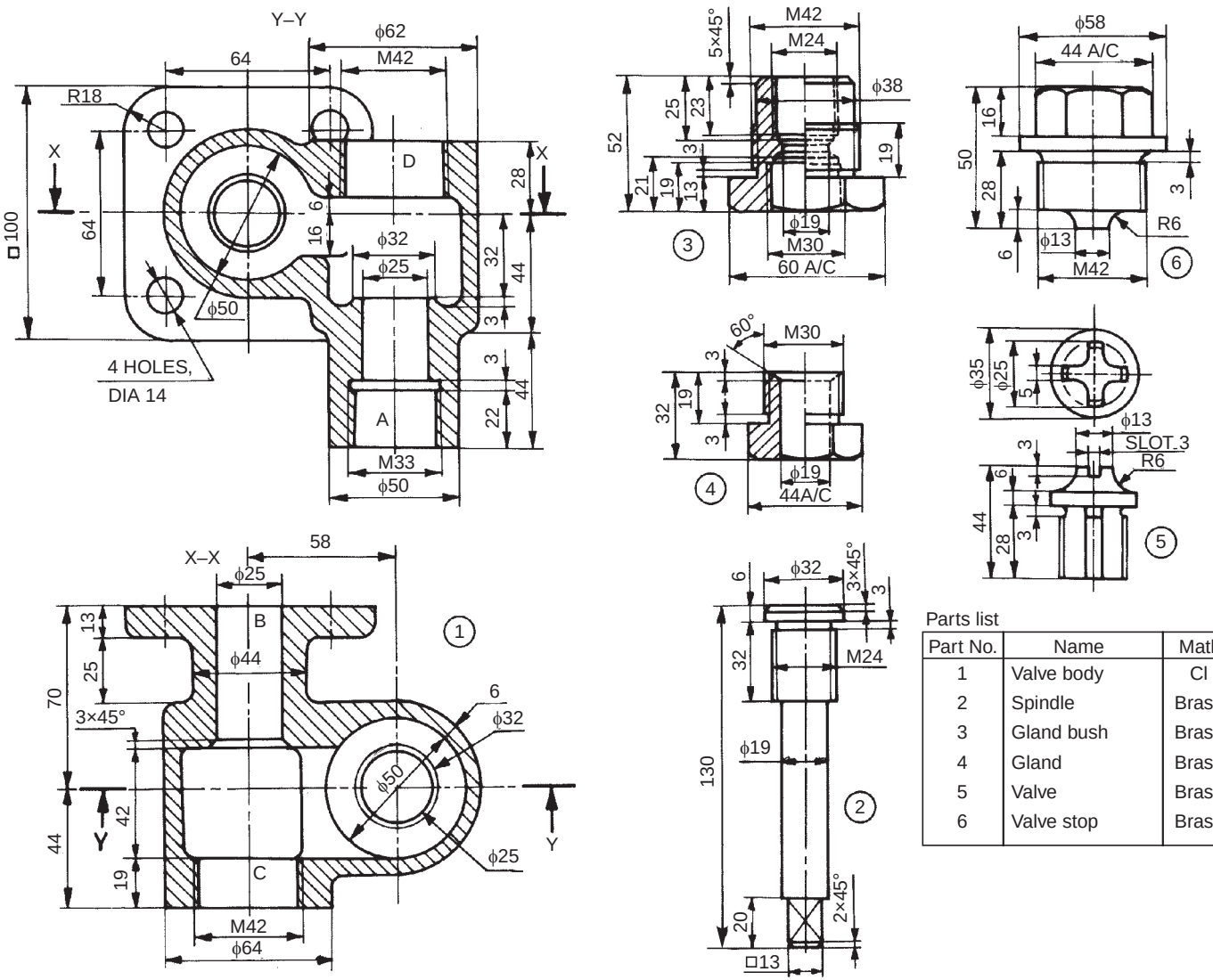

Parts list

Part No.	Name	Matl	Qty
1	Valve body	Cl	1
2	Spindle	Brass	1
3	Gland bush	Brass	1
4	Gland	Brass	1
5	Valve	Brass	1
6	Valve stop	Brass	1

Fig. 18.31b Non-return valve

www.EngineeringBooksPdf.com

Figure 18.31*b* shows the details of a non-return valve. Fluid flow enters the valve at A (inlet) and leaves the valve at B (outlet). The gland bush 3 and the gland 4 are first assembled and screwed onto the spindle 2 and assembled into the valve body 1 at C. By operating the spindle, the fluid outlet B is either closed or kept open. The valve 5 is positioned in the body through the passage D and it is kept floating. The valve stop 6 is screwed into the body at D and is used to control the amount of lift of the valve. The fluid inlet connection to the valve is made at A.

When the spindle is operated and the outlet is open; due to the pressure of the inlet fluid, valve is lifted and passage is established from A through B. When the pressure of the incoming fluid is reduced, the valve automatically shuts-off the inlet passage, ensuring non-return of the fluid in the opposite direction.

Exercise

The details of a non-return valve are shown in Fig. 18.31*b*. Assemble the parts and draw the following veiws to a suitable scale:

(*i*) Sectional view from the front, taking the section through Y-Y, and,

(*ii*) Sectional view from above, considering section through X-X.

18.4.5 Air Cock

This valve is used to control air or gas supply. The details of an air cock are shown in Fig. 18.32. It consists of a plug 2 which is inserted into the body 1, from the bottom. The rectangular sectioned spring 4 is placed in position at the bottom of the plug and seated over the screw cap 3. The screw cap is operated to adjust the spring tension. Lever 5 with square hole is used to operate the cock. By a mere 90° turn, the cock is either opened or closed fully.

Exercise

The details of an air cock are shown in Fig. 18.32. Assemble the parts and draw, (*i*) half sectional view from the front, (*ii*) view from the right and (*iii*) the view from above.

18.4.6 Blow-off Cock

The blow-off cock is fitted at the lowest part of the boiler, to remove the sediments collected. When operated, water and sediments rush through the side flange of the cock (due to pressure in the boiler) and escape through the bottom flange. Figure 18.33 shows the parts of a blow-off cock. It consists of a hollow conical body 1 into which the cock 2 is located. Both the cock and body have vertical slots and when they are aligned, water gushes through the cock. Gland 3 is fastened to the body by means of studs 4. To prevent leakage, packing material is placed between the cock and gland. Figure 19.17 shows the assembly drawing of the blow-off cock.

Exercise

The part drawings of a blow-off cock are shown in Fig. 18.33. Asemble the parts and draw, (*i*) sectional view from the front and (*ii*) view from above.

18.4.7 Feed Check Valve

It is used in boilers to regulate the supply of feed water and to maintain the water level. It is fitted close to the boiler shell and in the feed pipe line. Figure 18.34 shows the details of a feed check valve. The valve prevents water from being returned to the supply line, due to steam pressure in the boiler. Hence, it functions like a non-return valve.

It consists of a body with two flanges at right angle and feed water enters at the bottom and enters the boiler through the side opening. The valve seat 5 is introduced into the body of the valve from the top opening. The valve 4 is located in the valve seat, which guides the movement of the

www.EngineeringBooksPdf.com

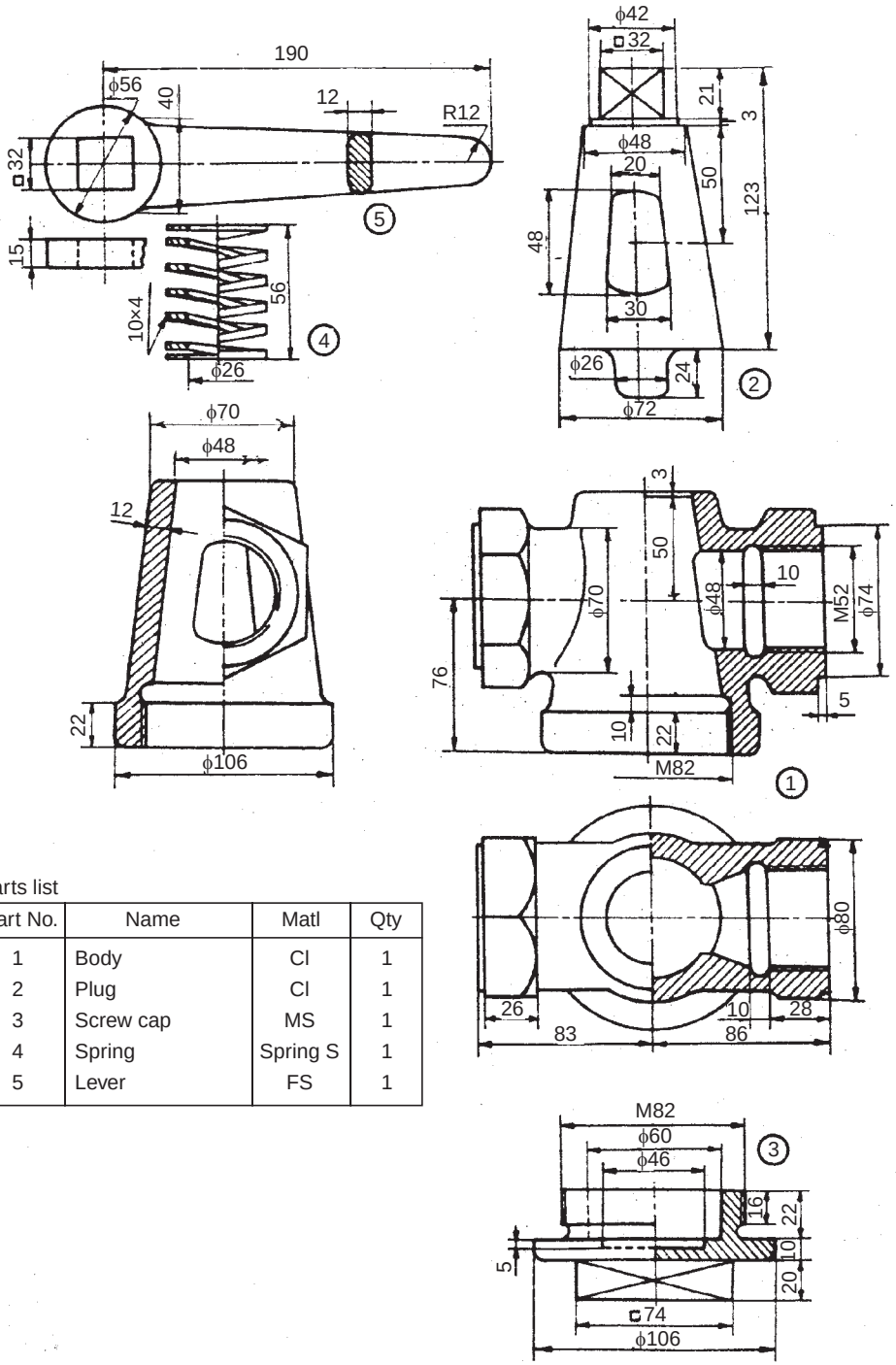

Parts list

Part No.	Name	Matl	Qty
1	Body	CI	1
2	Plug	CI	1
3	Screw cap	MS	1
4	Spring	Spring S	1
5	Lever	FS	1

Fig. 18.32 Air cock

www.EngineeringBooksPdf.com

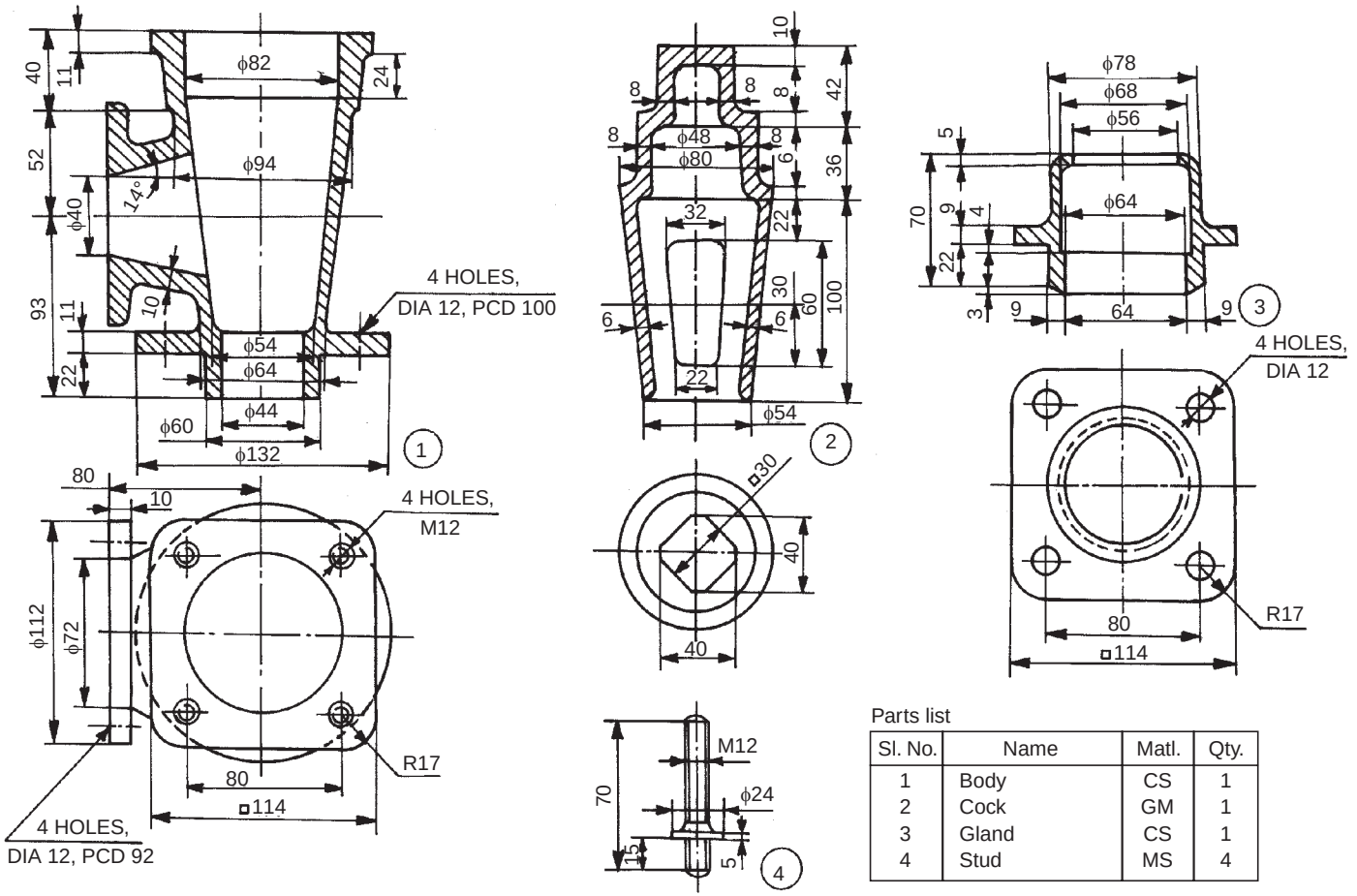

Parts list

Sl. No.	Name	Matl.	Qty.
1	Body	CS	1
2	Cock	GM	1
3	Gland	CS	1
4	Stud	MS	4

Fig. 18.33 Blow-off cock

www.EngineeringBooksPdf.com

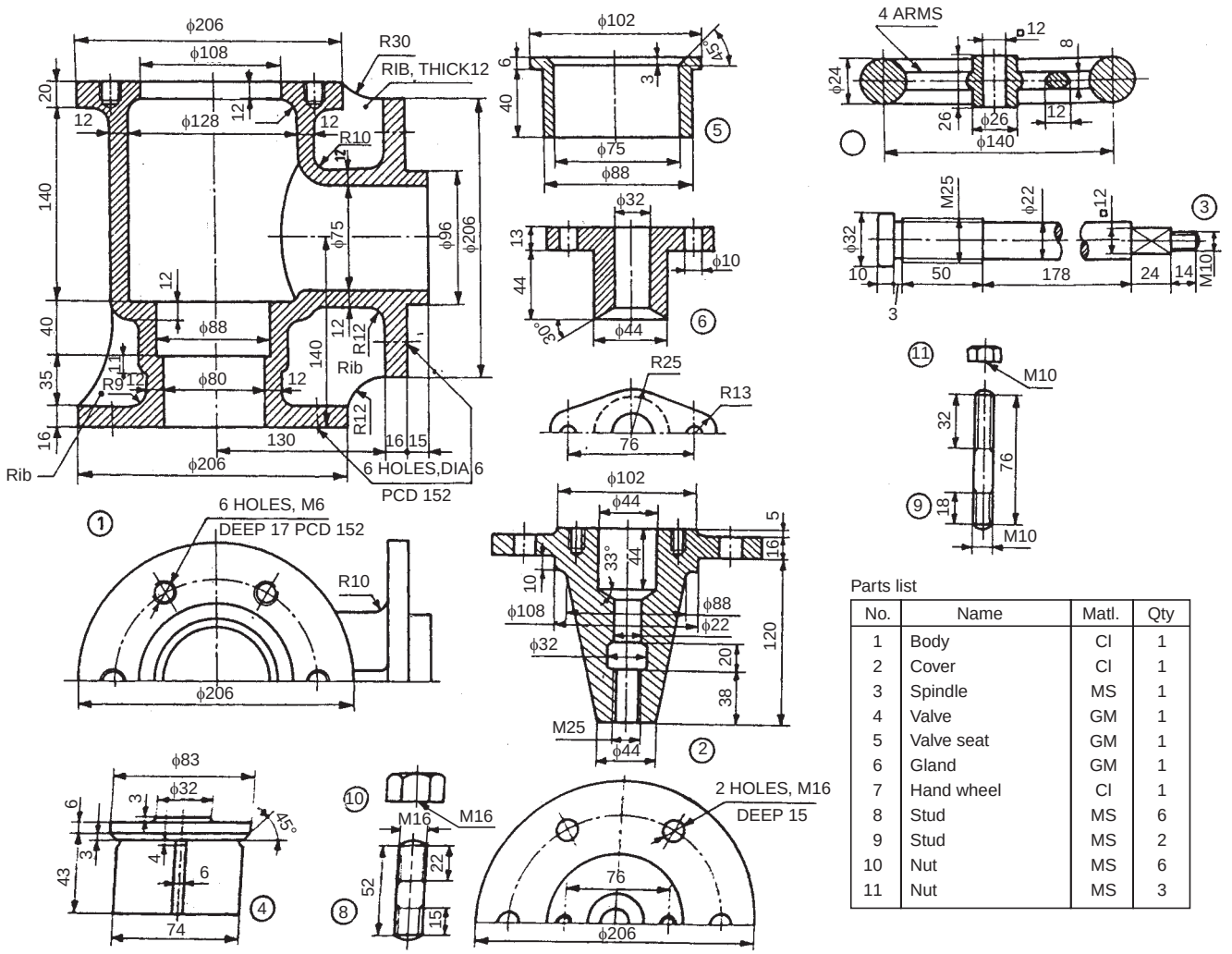

Parts list

No.	Name	Matl.	Qty
1	Body	CI	1
2	Cover	CI	1
3	Spindle	MS	1
4	Valve	GM	1
5	Valve seat	GM	1
6	Gland	GM	1
7	Hand wheel	CI	1
8	Stud	MS	6
9	Stud	MS	2
10	Nut	MS	6
11	Nut	MS	3

Fig. 18.34 Feed check valve

www.EngineeringBooksPdf.com

valve. The spindle 3 is screwed from bottom of the cover 2 such that, the square end of the spindle projects out through the cover. Studs 8 are screwed to the body and the spindle and cover assembly is fastened to the body by nuts 10. Studs 9 are screwed to the cover and the gland 6 is inserted into the cover and tightened by nuts 11. To prevent the leakage of water through the cover, packing material is introduced between the cover and gland. Hand wheel 7 is located on the spindle such that, the square hole in the hand wheel meshes with the square portion of spindle. The hand wheel is fixed to the spindle by nut 11.

By operating the hand wheel, the spindle permits the valve to get lifted from the valve seat and allows feed water to enter the boiler.

Exercise

Assemble the parts of the feed check valve, shown in Fig. 18.34 and draw, (*i*) sectional view from the front, (*ii*) view from the right and (*iii*) view from above.

18.4.8 Pressure Relief Valve

This valve is used in a pipe line to relieve the excess pressure in the line and safeguard the installation. The details of a pressure relief valve are shown in Fig. 18.35. The valve is connected such that, the inlet of the fluid flow is attached to the port A and outlet to the port B. When the line pressure goes beyond the set value, the fluid is let-off through the port C. The required line pressure may be set by changing the spring pressure accordingly.

The valve member 2 is placed in the body through D and spring 11 is introduced into the valve member. The sealed adapter 4 is then screwed into the body so that it touches the spring. Whenever there is an increase in the line pressure, the valve member is lifted-off from its seat. However, this lift may be adjusted by the adjusting screw 3 which reaches the valve member through sealed adapter and spring. The washer 9 of correct thickness '*t*' is used between the body and the sealed adapter, not only to adjust the spring pressure but also to act as seal. To prevent leakage of oil between the adjusting screw and the adapter, seal 10 is placed in the adapter. The adjusting screw is locked in position by means of the lock-nut 12.

For the manual method of pressure relief, the following parts of the assembly are used: The seal 10 is placed in the groove provided in the body through E. Control rod 7 is slipped through the oil seal and the adapter 6 is screwed into the body at E. The position of the control rod may be varied by the control screw 5 screwed through the adapter. Finally, the control knob 8 is screwed onto the control screw and fixed to it by means of a pin.

When the knob is operated so that the control rod forces the valve member away from its seat, the fluid passes through the port C. The washer 9 is placed between the body and the adapter and it not only acts as an oil seal but also controls the travel of control rod. When the knob is operated in the opposite direction, the valve member is returned to its seat by its spring pressure and the control rod is returned by the influence of the oil pressure.

Exercise

Figure 18.35 shows the details of a pressure relief valve. Assemble the parts and draw to full size, (*i*) the view from the front and (*ii*) sectional view from above.

www.EngineeringBooksPdf.com

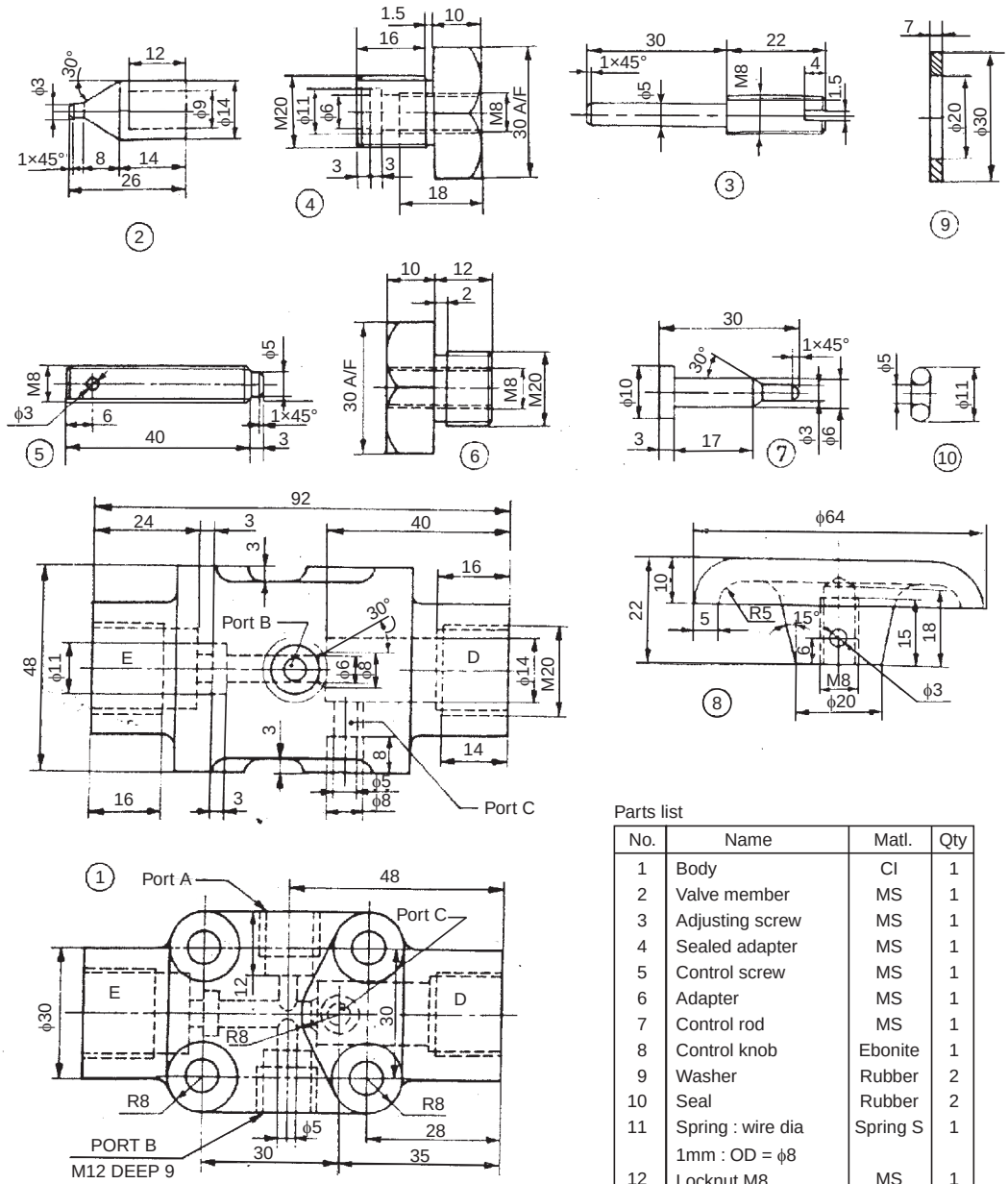

Parts list

No.	Name	Matl.	Qty
1	Body	CI	1
2	Valve member	MS	1
3	Adjusting screw	MS	1
4	Sealed adapter	MS	1
5	Control screw	MS	1
6	Adapter	MS	1
7	Control rod	MS	1
8	Control knob	Ebonite	1
9	Washer	Rubber	2
10	Seal	Rubber	2
11	Spring : wire dia 1mm : OD = ϕ8	Spring S	1
12	Locknut M8	MS	1

Fig. 18.35 Pressure relief valve

18.4.9 Lever Safety Valve

Safety valves are used to release some of the steam from the boiler when the pressure rises higher than the safe limit.

In a lever safety valve, a load is applied through a lever, by placing a suitable weight at some distance from the centre line of the valve to counter-balance the steam pressure in the boiler. The distance can be adjusted by moving the weight along the lever for adjusting the blowing-off pressure. The lever safety valves are suitable for stationery boilers.

www.EngineeringBooksPdf.com

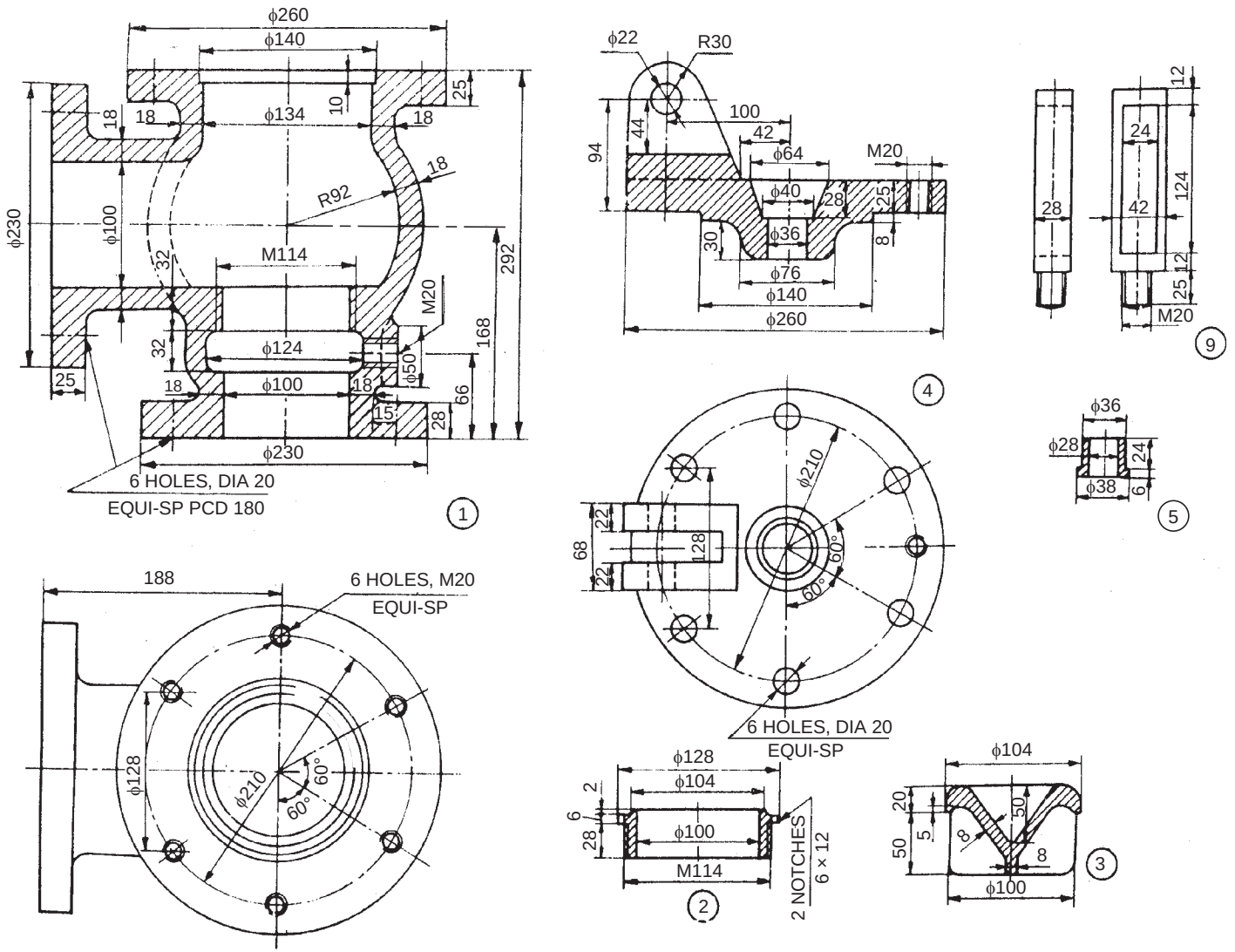

Fig. 18.36 Lever safety valve (*contd.*)

www.EngineeringBooksPdf.com

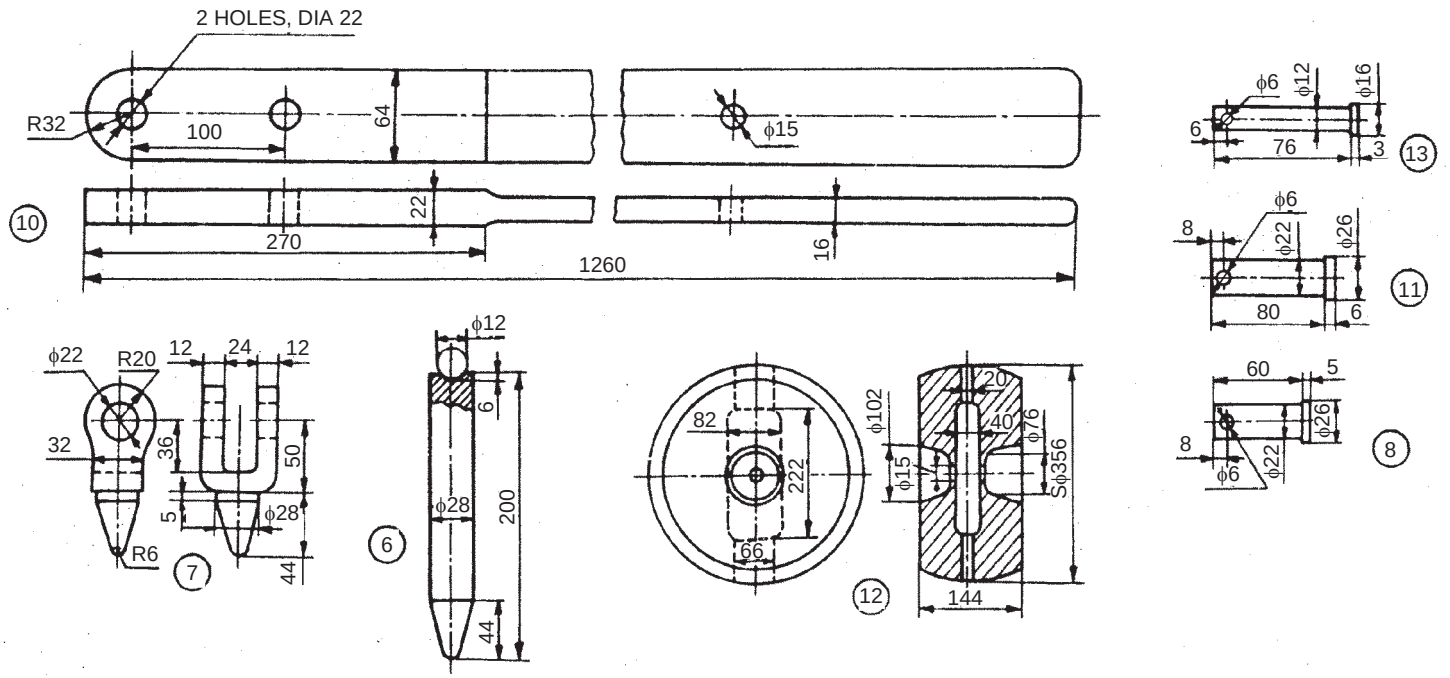

Parts list

Part No.	Name	Matl	Qty	Part No.	Name	Matl	Qty
1	Body	Cl	1	8	Toggle-pin	MS	1
2	Valve seat	GM	1	9	Lever guide	MS	1
3	Valve	GM	1	10	Lever	FS	1
4	Cover	Cl	1	11	Fulcrum pin	MS	1
5	Cover bush	Brass	1	12	Weight	Cl	1
6	Spindle	MS	1	13	Lever pin	MS	1
7	Toggle	MS	1	14	Stud with nut M20	—	6

Fig. 18.36 Lever safety valve

www.EngineeringBooksPdf.com

The details of a simple lever safety valve are shown in Fig. 18.36. In this, valve seat 2 is screwed in the valve body 1. The spindle 6 and toggle 7 together keeps the valve 3 pressed against the seat. The top of the valve body is closed with a cover 4 with the help of six studs 14. A cover bush 5 is used to prevent the leakage through the central hole of the cover. A lever guide 9 is screwed to the cover in order to restrict the lever movement. The weight 12 is attached to the lever 10 by means of lever pin 13. The toggle is held in position by means of toggle pin 8. Fulcrum pin 11 is used to connect the lever and the cover, to act as the fulcrum.

Exercise

The details of a lever safety valve are shown in Fig. 18.36. Assemble the details and draw,

(*i*) The sectional view from the front, and

(*ii*) The view from above.

18.4.10 Spring Loaded Relief Valve

Safety or relief valves are used as boiler mountings and they let off steam from inside the boiler whenever the pressure exceeds the set value. Thus, these valves safe guard the boilers. The pressure may be set by using a dead weight or a tension spring with tension adjustment arrangement.

Figure 18.37 shows the details of a spring loaded relief valve in which a tension spring is used to set a pre-determined value for the steam pressure in the boiler. Valve 3 is placed vertically inside the valve body 1 and the valve seat is an integral part of the valve body, in the design considered. Stem 6 is located in the valve, with pointed end entering into the valve. Flange 7 is now placed over this assembly and fastened to the valve body by fulcrum bolt 4. Lever 2 is attached to the fulcrum bolt by using the fulcrum pin 5 such that, the lever rests on the stem 6. One end of the tension spring 8 is attached to the lever and the other end to the tension adjusting bolt 9. The tension adjusting bolt is attached to a base and the spring tension can thus be adjusted to any required value.

Exercise

Assemble the parts of a spring loaded relief valve, shown in Fig. 18.37 and draw the following views:

(*i*) Sectional view from the front, and

(*ii*) View from the right.

18.4.11 Ramsbottom Safety Valve

It is a boiler mounting and a safety device which protects the boiler against building-up of excess pressure. The spring used in the safety valve is set to act when the steam pressure exceeds the set value and allows the steam to escape. Thus, only the permissible value of steam pressure is allowed inside the boiler.

Figure 18.38 shows the details of Ramsbottom safety valve. It consists of housing 1 with two valve chests. The valve seats 3 are screwed into the housing and valves 2 are located in the valve seats. The eye bolt 8 is fastened to the bridge of the housing, by means of washer 9 and both the nuts 10 and 11. Pivot 4 is pinned to the lever 5 and it is placed over the valves and held in position by safety links 7 and spring 6. The safety links 7 are fixed at one end to the lever and the other end to the eye bolt 8 by pins 12 and split pins 13. The required rigidity is provided to this

www.EngineeringBooksPdf.com

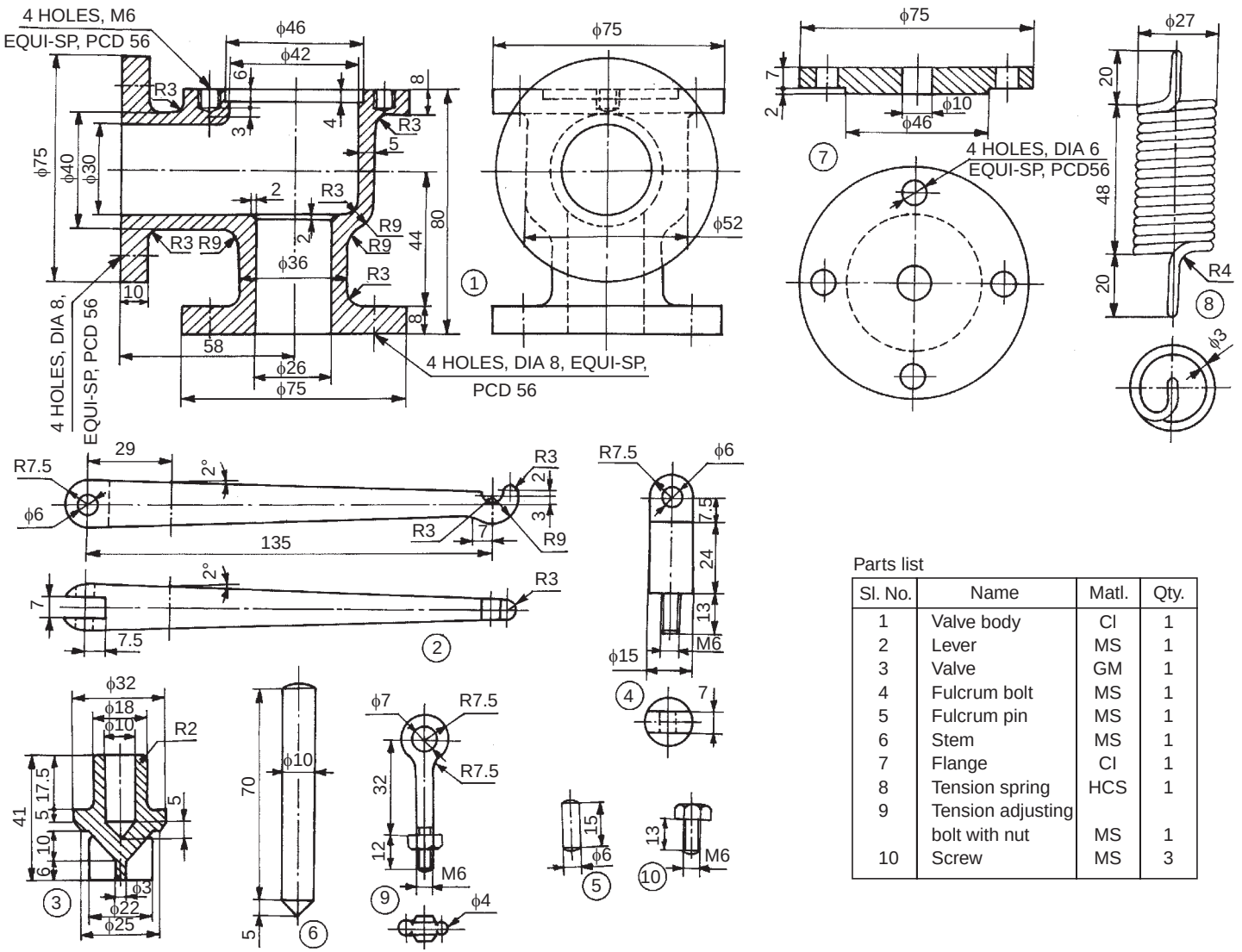

Parts list

Sl. No.	Name	Matl.	Qty.
1	Valve body	CI	1
2	Lever	MS	1
3	Valve	GM	1
4	Fulcrum bolt	MS	1
5	Fulcrum pin	MS	1
6	Stem	MS	1
7	Flange	CI	1
8	Tension spring	HCS	1
9	Tension adjusting bolt with nut	MS	1
10	Screw	MS	3

Fig. 18.37 Spring loaded relief valve

www.EngineeringBooksPdf.com

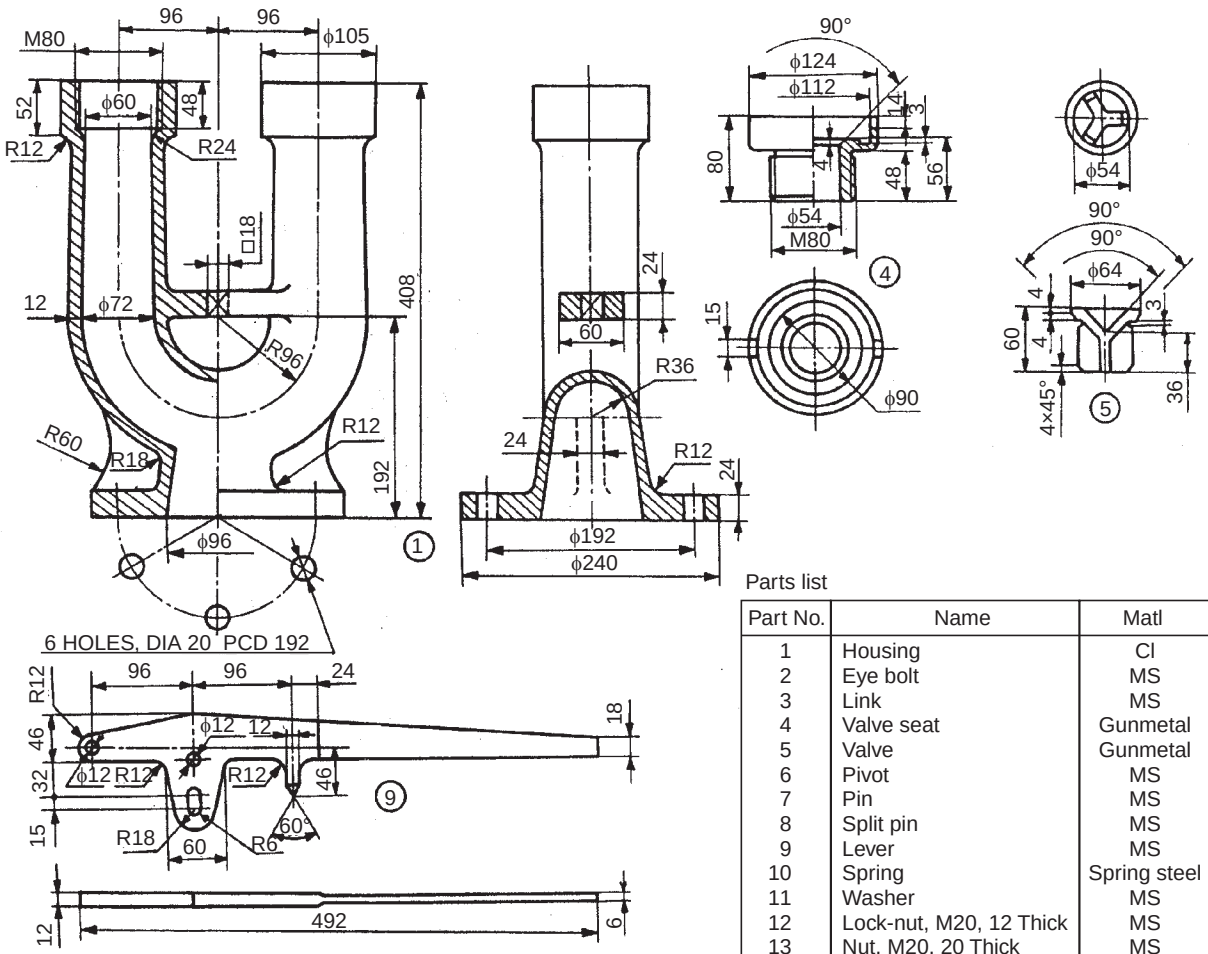

Parts list

Part No.	Name	Matl	Qty
1	Housing	CI	1
2	Eye bolt	MS	1
3	Link	MS	2
4	Valve seat	Gunmetal	2
5	Valve	Gunmetal	2
6	Pivot	MS	1
7	Pin	MS	3
8	Split pin	MS	3
9	Lever	MS	1
10	Spring	Spring steel	1
11	Washer	MS	1
12	Lock-nut, M20, 12 Thick	MS	1
13	Nut, M20, 20 Thick	MS	1

Fig. 18.38 Ramsbottom safety valve (*contd.*)

www.EngineeringBooksPdf.com

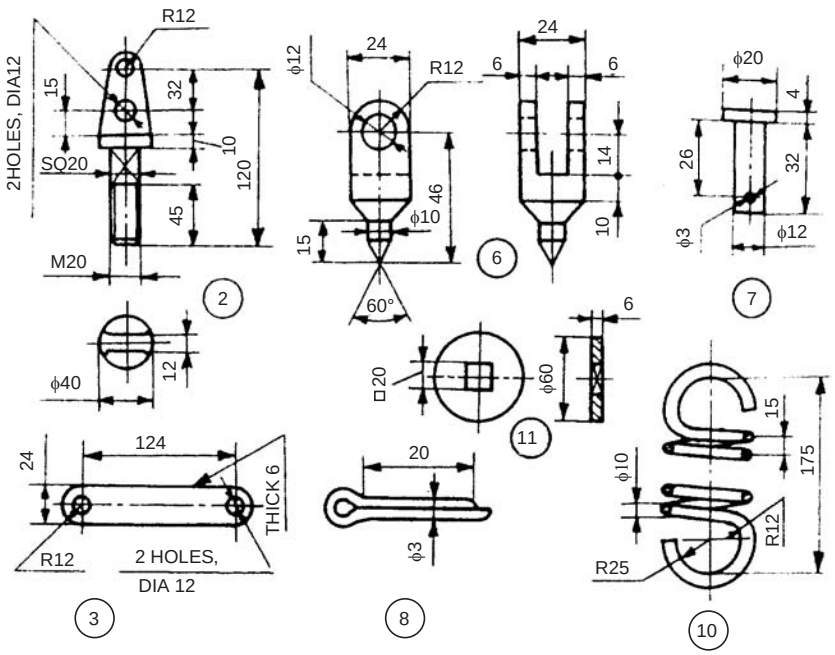

Fig. 18.38 Ramsbottom safety valve

assembly by fixing the spring 6 between the eye bolt and the lever (holes are provided in the lever and eye bolt for this purpose). When the set value of the pressure exceeds in the boiler, the lever moves and allows the valves to get lifted from the seats concerned. The movement of the lever is permitted due to the slot provided centrally in it and returns to the original position due to spring action. Figure 19.19 shows the assembled views of the Ramsbottom safety valve.

Exercise

Assemble the parts of the Ramsbottom safety valve, shown in Fig. 18.38 and draw, (*i*) sectional view from the front and (*ii*) sectional left side view.

18.5 MISCELLANEOUS PARTS

18.5.1 Socket and Spigot Joint

This joint is used to connect two circular rods and subjected to axial loads. For this purpose, the ends of the rods are shaped suitably to form a socket at one end while the other rod end as a spigot and slots are made.

Figure 18.39 shows the details of a socket and spigot joint. The spigot end of the rod 2 is inserted into the socket end of the rod 1. After aligning the socket and spigot ends, the cotter 3 is driven-in, forming the joint. Figure 6.13 shows the assembly drawing of the socket and spigot joint.

www.EngineeringBooksPdf.com

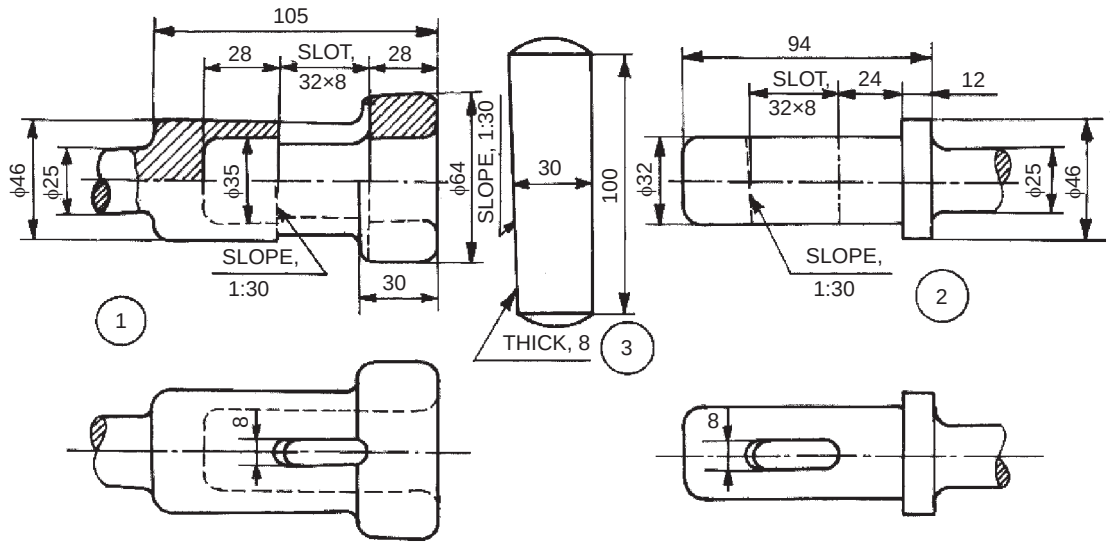

Parts list

Sl. No.	Name	Matl.	Qty.
1	Socket end	MS	1
2	Spigot end	MS	1
3	Cotter	HCS	1

Fig. 18.39 Socket and spigot joint

Exercise

Assemble the parts of a socket and spigot joint, shown in Fig. 18.39 and draw the following views:

(*i*) Half sectional view from the front, with top half in section, and

(*ii*) View from the right.

18.5.2 Knuckle Joint

This is a pin joint and is used to connect two circular rods subjected to axial loads. Compared to a socket and spigot joint, wherein the axes of both the rods should be in the same plane; in the knuckle joint, one of the rods can be swiveled through some angle about the connecting pin, *i.e.*, the axes of the two rods could be inclined to each other.

Figure 18.40 shows the details of a knuckle joint. The eye end of the rod 2 is inserted into the fork end 1 of the other rod. Then, pin 3 is inserted through the holes in the ends of the rods and held in position by the collar 4 and taper pin 5. Figure 6.15 shows the assembly drawing.

Exercise

Assemble the parts of a knuckle joint, shown in Fig. 18.40 and draw, (*i*) sectional view form the front and (*ii*) view from above.

www.EngineeringBooksPdf.com

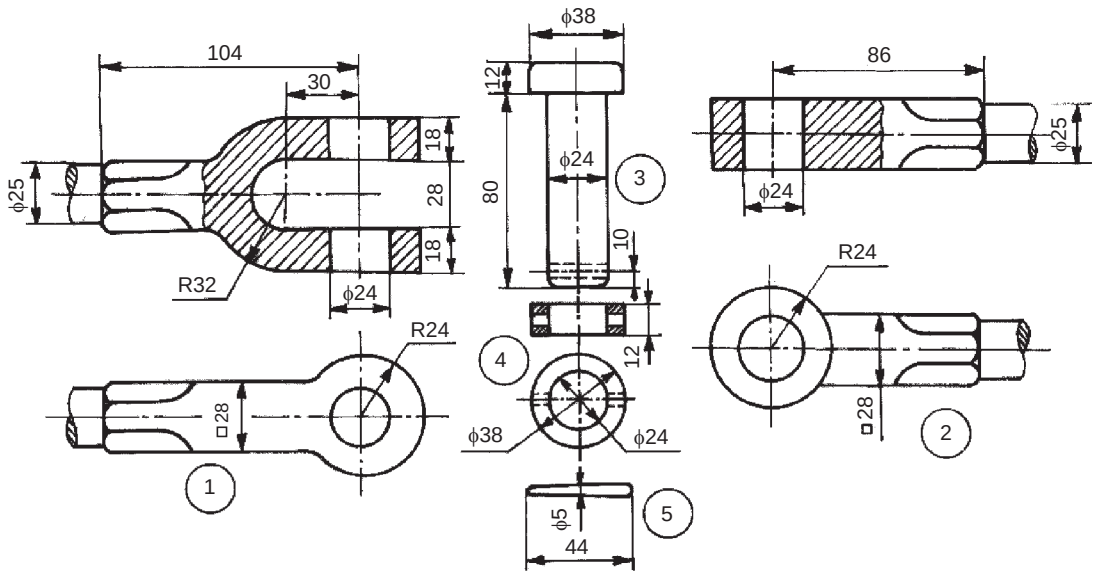

Parts list

Sl. No.	Name	Matl.	Qty.
1	Fork end	Forged steel	1
2	Eye end	Forged steel	1
3	Pin	Mild steel	1
4	Collar	Mild steel	1
5	Taper pin	Mild steel	1

Fig. 18.40 Knuckle joint

18.5.3 Protected Flanged Coupling

Couplings are used to join two shafts so that they act as a single unit during rotation and power can be transmitted from one shaft to the other. The protected flanged coupling is a rigid shaft coupling, the axes of the shafts being collinear. Figure 18.41 shows the various parts of a protected flanged coupling. The flanges 2 and 3 are mounted at the ends of two shafts 1 by means of keys 5. Later, the two flanges are connected to each other by means of bolts with nuts 4. In this rigid coupling, the bolt heads and nuts are located in the annular recesses provided on the flanges and so are not exposed. Hence, the name protected flanged coupling. Figure 7.5 shows the assembly drawing.

Exercise

Assemble the parts of a protected flanged coupling shown in Fig. 18.41 and draw the following views:

(*i*) Half sectional view from the front, with top half in section, and

(*ii*) View from the right.

18.5.4 Bushed-pin Type Flanged Coupling

This coupling is also used to join two circular shafts. However, this is not a rigid coupling, but a flexible one. Flexible couplings are preferred to rigid ones, as perfect alignment of two shafts is difficult to achieve; which is the requisite condition for rigid couplings.

www.EngineeringBooksPdf.com

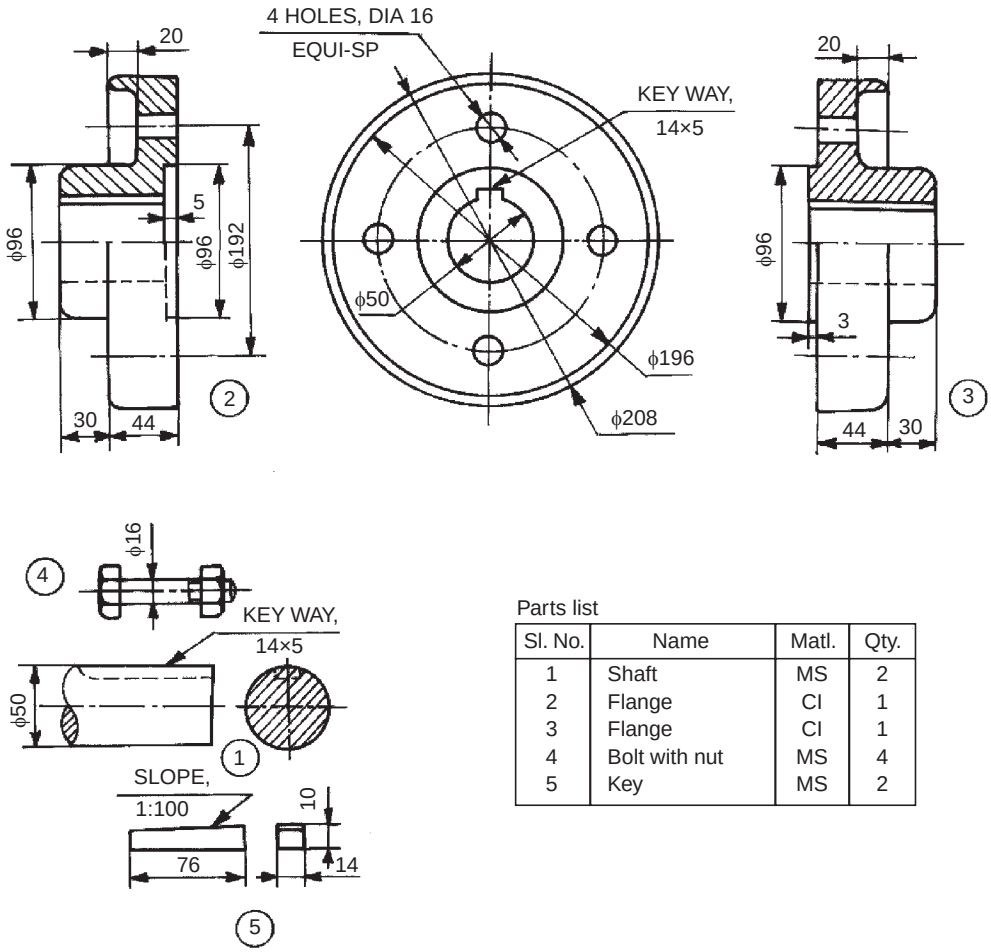

Parts list

Sl. No.	Name	Matl.	Qty.
1	Shaft	MS	2
2	Flange	CI	1
3	Flange	CI	1
4	Bolt with nut	MS	4
5	Key	MS	2

Fig. 18.41 Protected flanged coupling

Figure 18.42 shows various components of a bushed-pin type flanged coupling. Flanges 1 and 2 are mounted on the ends of shafts 3 by using sunk keys 5. The smaller ends of pins 4 are rigidly fixed to the flange 2 by means of nuts, whereas the enlarged ends, covered with flexible bushes 6, are positioned in the flange 1. The flexible medium takes care of mis-alignment if any, and also acts as a shock absorber. These couplings are used to connect prime mover or an electric motor and a centrifugal pump, electric motor and a reduction gear, etc. Figure 7.7 shows the assembly drawing.

Exercise

Assemble the parts of the bushed pin type flanged coupling shown in Fig. 18.42 and draw, (*i*) half sectional view from the front, with top half in section and (*ii*) view from the right.

18.5.5 Oldham Coupling

This coupling is known as a non-aligned coupling and is used to connect two parallel shafts, whose axes are at a small distance apart. Figure 18.43 shows various parts of a Oldham coupling.

www.EngineeringBooksPdf.com

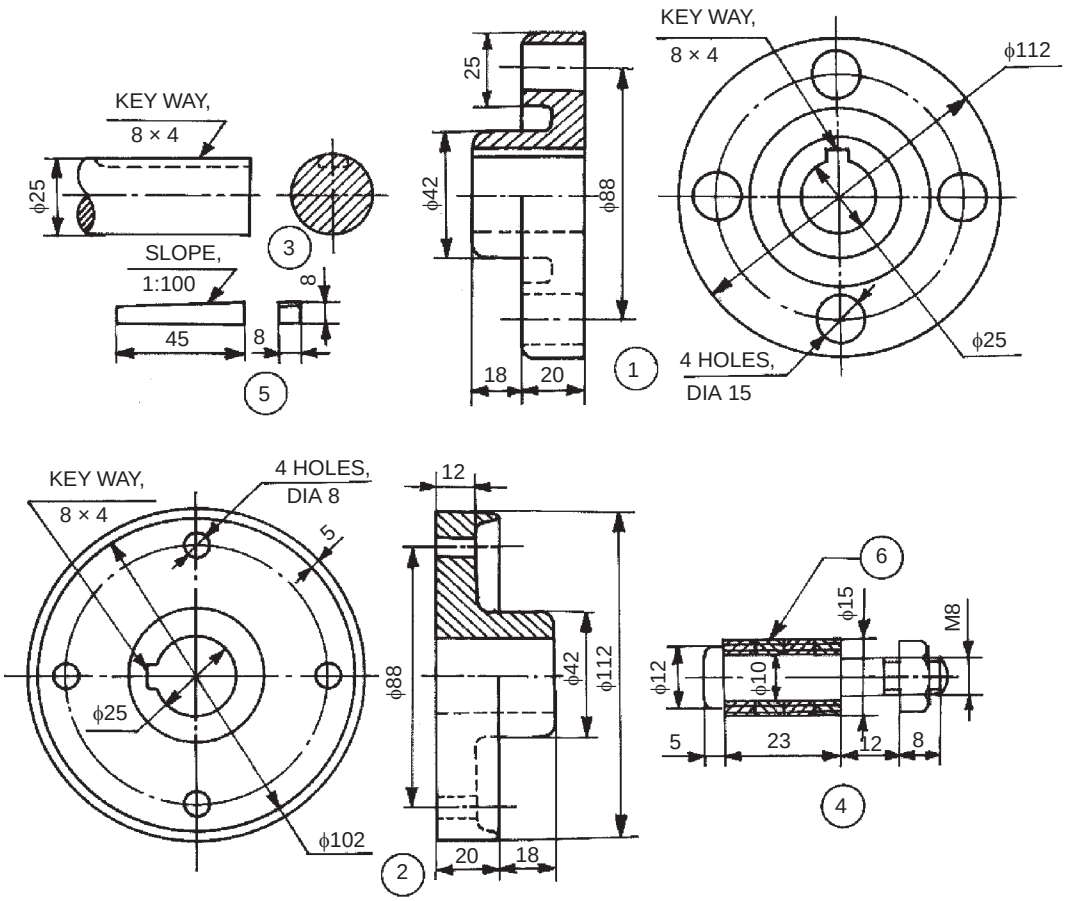

Parts list

Sl. No.	Name	Matl.	Qty.
1	Flange	CI	1
2	Flange	CI	1
3	Shaft	MS	2
4	Pin with nut	MS	4
5	Feather key	MS	2
6	Bush	Nylon	16

Fig. 18.42 Bushed-pin type flanged coupling

www.EngineeringBooksPdf.com

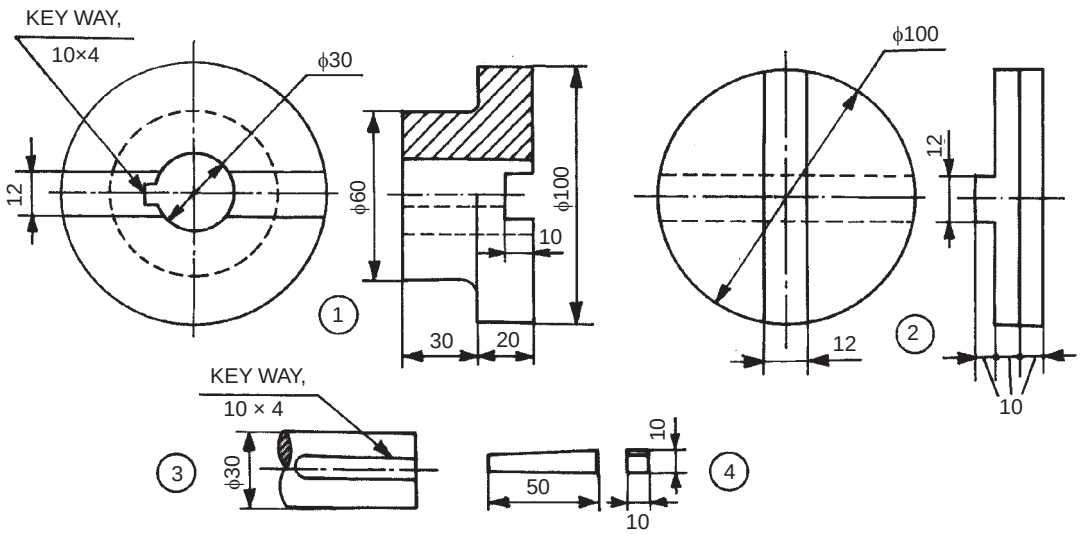

Parts list

Sl. No.	Name	Matl.	Qty.
1	Flange	MS	2
2	Disc	MS	1
3	Shaft	MS	2
4	Key	MS	2

Fig. 18.43 Oldham coupling

The two flanges 1 are mounted on the ends of shafts 3 by means of sunk keys 4. The flanges are having rectangular slots in them. These flanges are set such that, the slots in them are at right angle to each other. The circular disc 2 is now positioned in-between them so that the projections in the circular disc, enter into the corresponding slots of the flanges. During rotation of the shafts, the central disc slides in the slots of the flanges. Figure 7.12*b* shows the assembly drawing.

Exercise

Assemble the parts of the Oldham coupling shown in Fig. 18.43 and draw, (*i*) sectional view from the front and (*ii*) view from the left.

18.5.6 Universal Coupling

This is a rigid coupling and is used to connect two shafts, whose axes intersect if extended.

www.EngineeringBooksPdf.com

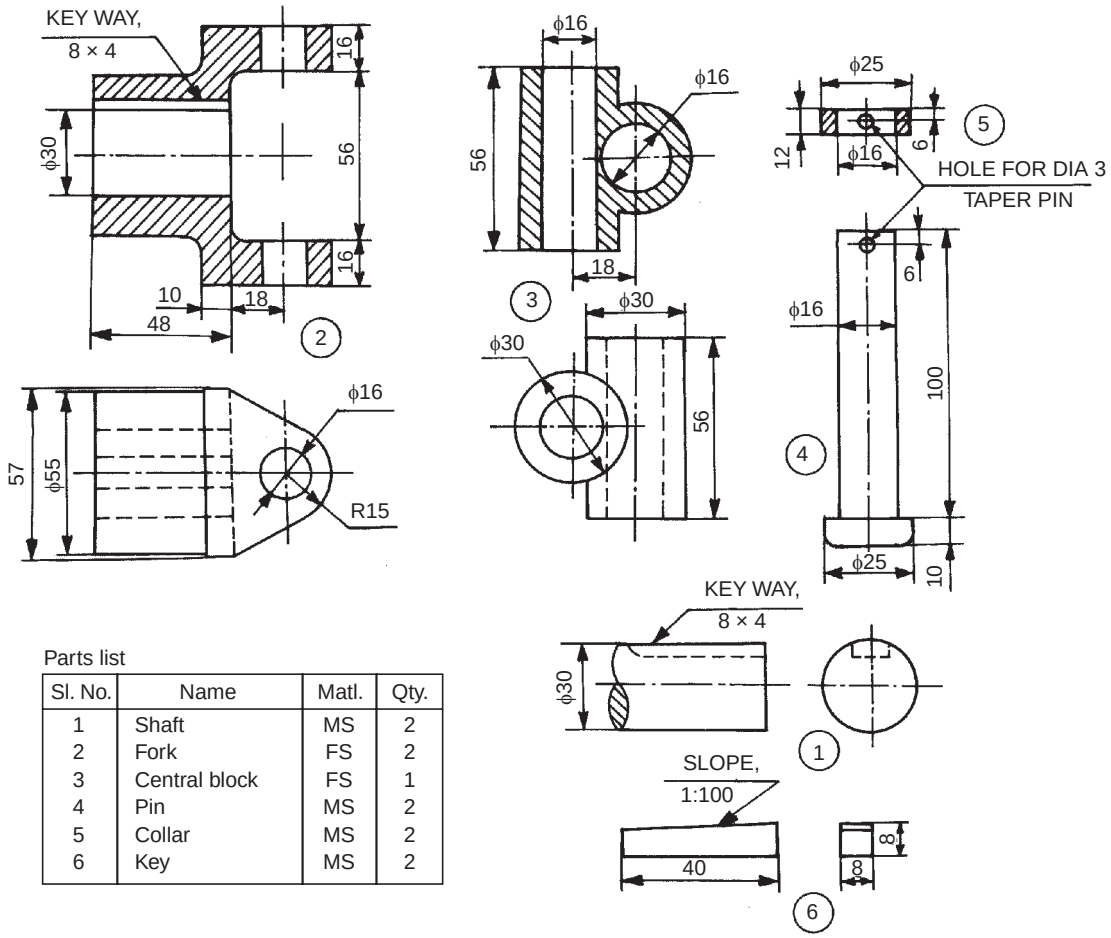

Parts list

Sl. No.	Name	Matl.	Qty.
1	Shaft	MS	2
2	Fork	FS	2
3	Central block	FS	1
4	Pin	MS	2
5	Collar	MS	2
6	Key	MS	2

Fig. 18.44 Universal coupling

Figure 18.44 shows the details of universal coupling. The forks 2 are mounted at the ends of two shafts 1, making use of sunk keys 6. The central block 3, having two arms at right angle to each other, is placed between the forks and connected to both of them by using pins 4 and collars 5. A taper pin (not shown) is used to keep the pins 4 in position. During rotation of shafts, the angle between them can be varied. Figure 7.11*b* shows the assembly drawing.

Exercise

Assemble the parts of universal coupling and, shown in Fig. 18.44 and draw, (*i*) sectional view from the front and (*ii*) view from the right.

18.5.7 Plummer Block

This bearing is used for long shafts, requiring intermediate support, especially when the shaft cannot be introduced into the bearing, end-wise.

www.EngineeringBooksPdf.com

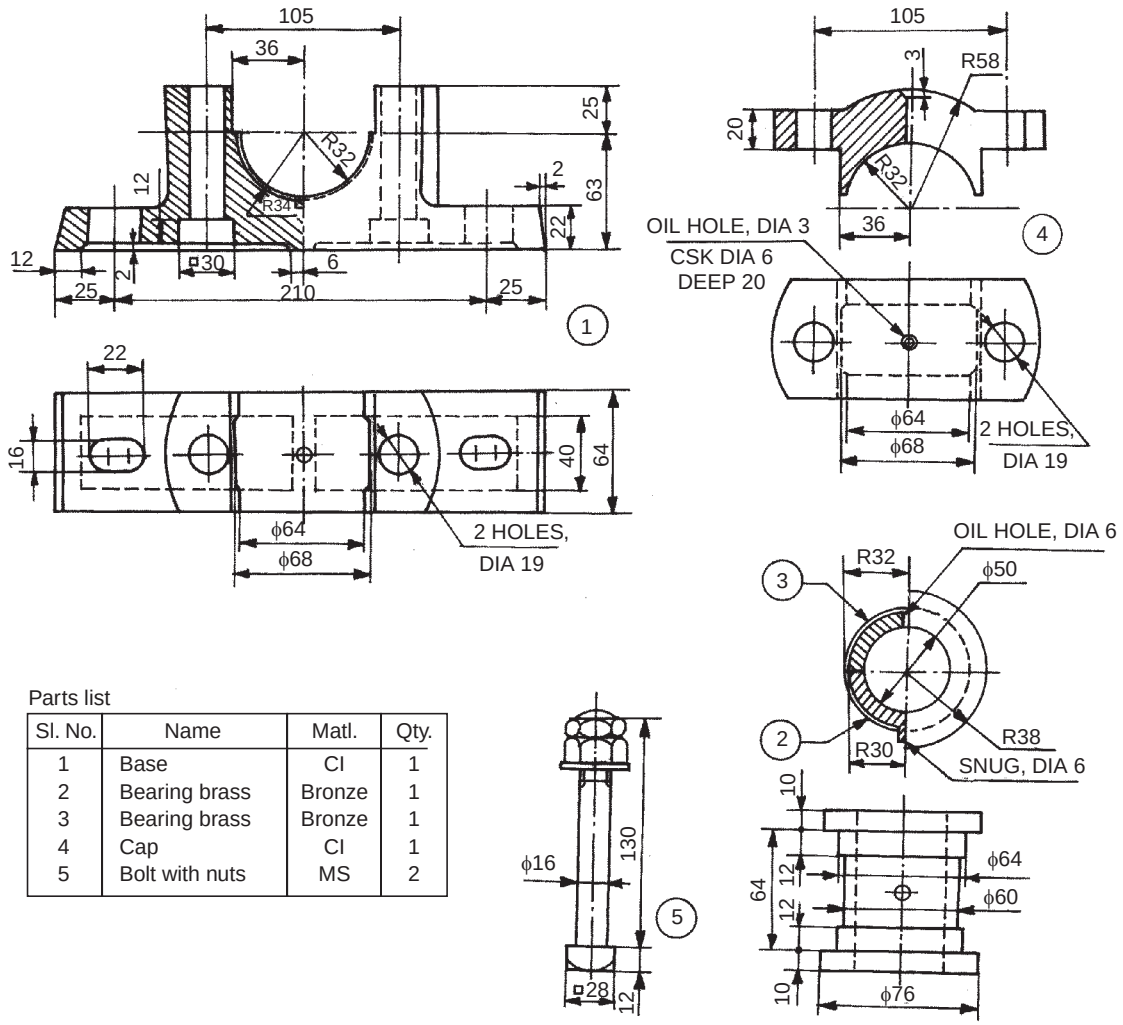

Parts list

Sl. No.	Name	Matl.	Qty.
1	Base	CI	1
2	Bearing brass	Bronze	1
3	Bearing brass	Bronze	1
4	Cap	CI	1
5	Bolt with nuts	MS	2

Fig. 18.45 Plummer block

Figure 18.45 shows the details of a plummer block/pedestal bearing. The bottom half 2 of the bearing brass is placed in the base 1 such that, the snug of the bearing enters into the corresponding recess in the base; preventing rotation of the brasses. After placing the journal (shaft) on the bottom half of the bearing brass, kept in the base; the upper half of the bearing brass 3 is placed and the cap 4 is then fixed to the base, by means of two bolts with nuts 5. The bearing is made of two halves so that the support can be introduced at any location of the long shaft. Figure 12.4 shows the assembly drawing.

Exercise

Assemble the parts of the plummer block, shown in Fig. 18.45 and draw the following views:

(*i*) Half sectional view from the front, with left half in section, and

(*ii*) View from above.

www.EngineeringBooksPdf.com

18.5.8 Swivel Bearing

It is used to support shafts where there are possibilities of misalignment. These, like plummer blocks, may be placed at any desired location.

Figure 18.46 shows the details of a swivelling or self-aligning bearing. If consists of the fork 3 which is fitted into the body 1 by means of the spindle 4, and by adjusting the spindle position, the fork may be elevated to any required height. It is then free to swivel in a horizontal plane. The bearing is then supported in the fork by means of two set screws 8. The connection between the fork and the screws is such that, the bearing is free to swivel in a vertical plane. The flexibility in both the planes is thus made available.

Accurate alignment may be obtained by screw height and slide adjustments. After the required adjustments are made to suit the shaft position, these are then locked. The lock-nut 5 with the set screw 7 passing through it, and another set screw 6 passing through the body are used to lock the height adjustment. The tips of these set screws tighten upon the brass disks 9 and 10, thus preventing damage to the threads on the spindle. Hexagonal nuts 11 are used with the side adjustment set screws to lock them in position. The gun metal bush 12 is used inside the bearing.

Exercise

Assemble the parts of the swivel bearing shown in Fig. 18.46 and draw, (*i*) half sectional view from the front, with left half in section, (*ii*) view from the left and (*iii*) view from above.

18.5.9 Foot -step Bearing

This consists of two bearings, one in the form of a disc and the other in the form of a bush. It is intended to support a vertical shaft under axial load. The axial load is resisted by the disc shaped bearing provided at the bottom of the shaft, whereas the bush bearing resists radial load on the shaft.

The details of a foot-step bearing are shown in Fig. 18.47. The disc 3 is located in the body 1 after placing the pin 5 in the corresponding hole in the body. This prevents the rotation of the disc, due to rotation of the vartical shaft. Bush 2 is now placed in the body such that, the snug on the bush rests in the recess provided in the body. This assembly is now ready to support the vertical shaft 4. Figure 12.9 shows the assembly drawing.

Exercise

Assemble the parts of a foot-step bearing, shown in Fig. 18.47 and draw, (*i*) sectional view from the front and (*ii*) view from above.

www.EngineeringBooksPdf.com

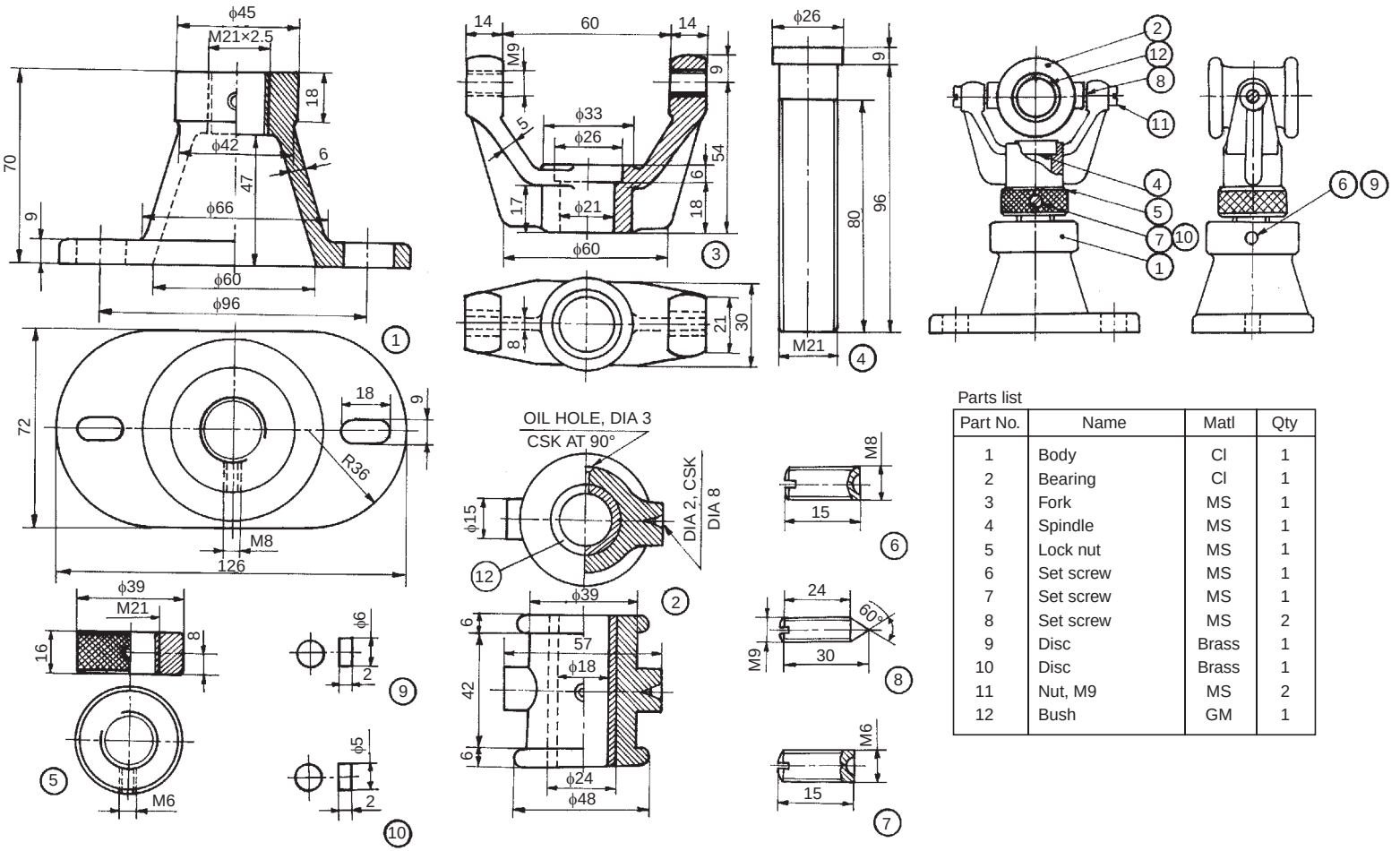

Parts list

Part No.	Name	Matl	Qty
1	Body	CI	1
2	Bearing	CI	1
3	Fork	MS	1
4	Spindle	MS	1
5	Lock nut	MS	1
6	Set screw	MS	1
7	Set screw	MS	1
8	Set screw	MS	2
9	Disc	Brass	1
10	Disc	Brass	1
11	Nut, M9	MS	2
12	Bush	GM	1

Fig. 18.46 Swivel bearing

www.EngineeringBooksPdf.com

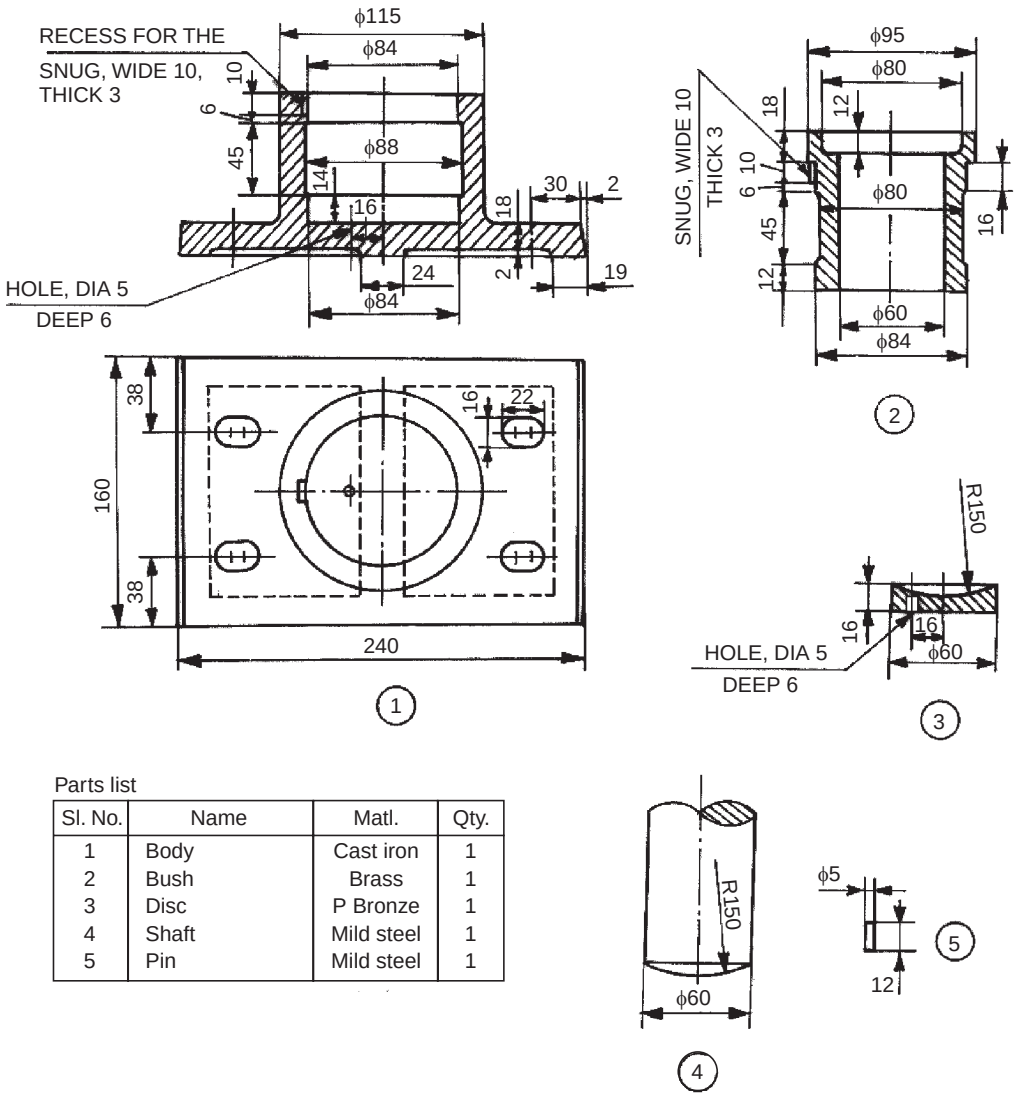

Parts list

Sl. No.	Name	Matl.	Qty.
1	Body	Cast iron	1
2	Bush	Brass	1
3	Disc	P Bronze	1
4	Shaft	Mild steel	1
5	Pin	Mild steel	1

Fig. 18.47 Foot-step bearing

18.5.10 C-clamp

C-clamp is used to hold a component for further work, such as inspection or working on it. The part drawings of a C-clamp are shown in Fig. 18.48.

It consists of a frame 1 into which the screw 2 is inserted. The pad 3 is attached to the screw 2 by means of a cheese head cap screw 7. The screw 2 is operated by a tommy bar 4 inserted in the corresponding hole in it. The collar 5 is fitted at the end of the tommy bar, by using the pin 6. The work is clamped between the face of the frame and the pad mounted on the screw.

Exercise

Assemble the components of the C-clamp shown in Fig. 18.48 and draw, (*i*) sectional view from the front and (*ii*) view from the right.

www.EngineeringBooksPdf.com

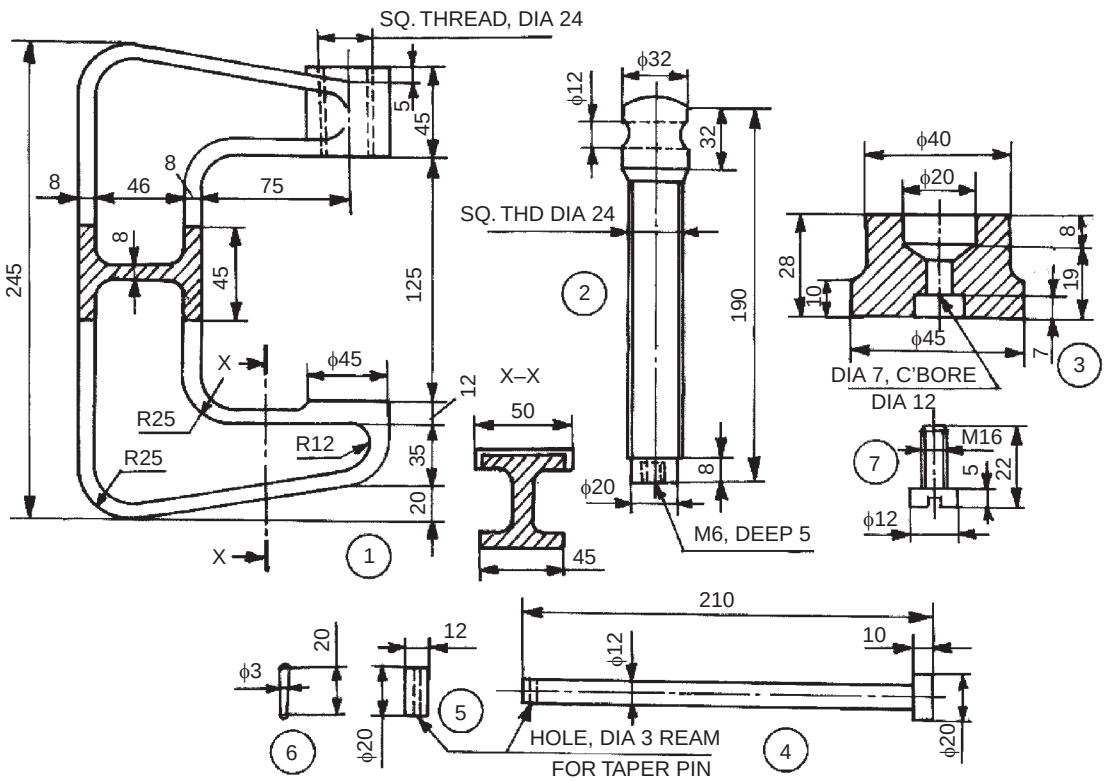

Parts list

Sl. No.	Name	Matl.	Qty.
1	Frame	CI	1
2	Screw	MS	1
3	Pad	MS	1
4	Tommy bar	MS	1
5	Collar	MS	1
6	Pin	MS	1
7	Cap screw	MS	1

Fig. 18.48 C-clamp

18.5.11 Crane Hook

Figure 18.49 shows the details of a crane hook. The bush 6 is placed in the hook anchor 3 which in-turn is placed on the crane hook 1. The lock-nut 9 is used to lock this assembly in position and a pin is used to lock the nut. The bush facilitates free rotation of the crane hook in the hook anchor.

The end bushes 4 are placed on the outside of the support plates 2 and fitted with the bolts and nuts 11. The support plate assembly is placed on either side of the above crane hook assembly and the three plate spacers 5 are also used to maintain the distance between the support plates and fixed in position by means of the lock-nuts 7 and 8. The washers 10 are used for clamping the plate spacers with lock-nuts.

Exercise

Figure 18.49 shows the details of a crane hook. Assemble the parts and draw to a suitable scale, (*i*) the view from the front and (*ii*) view from the side.

www.EngineeringBooksPdf.com

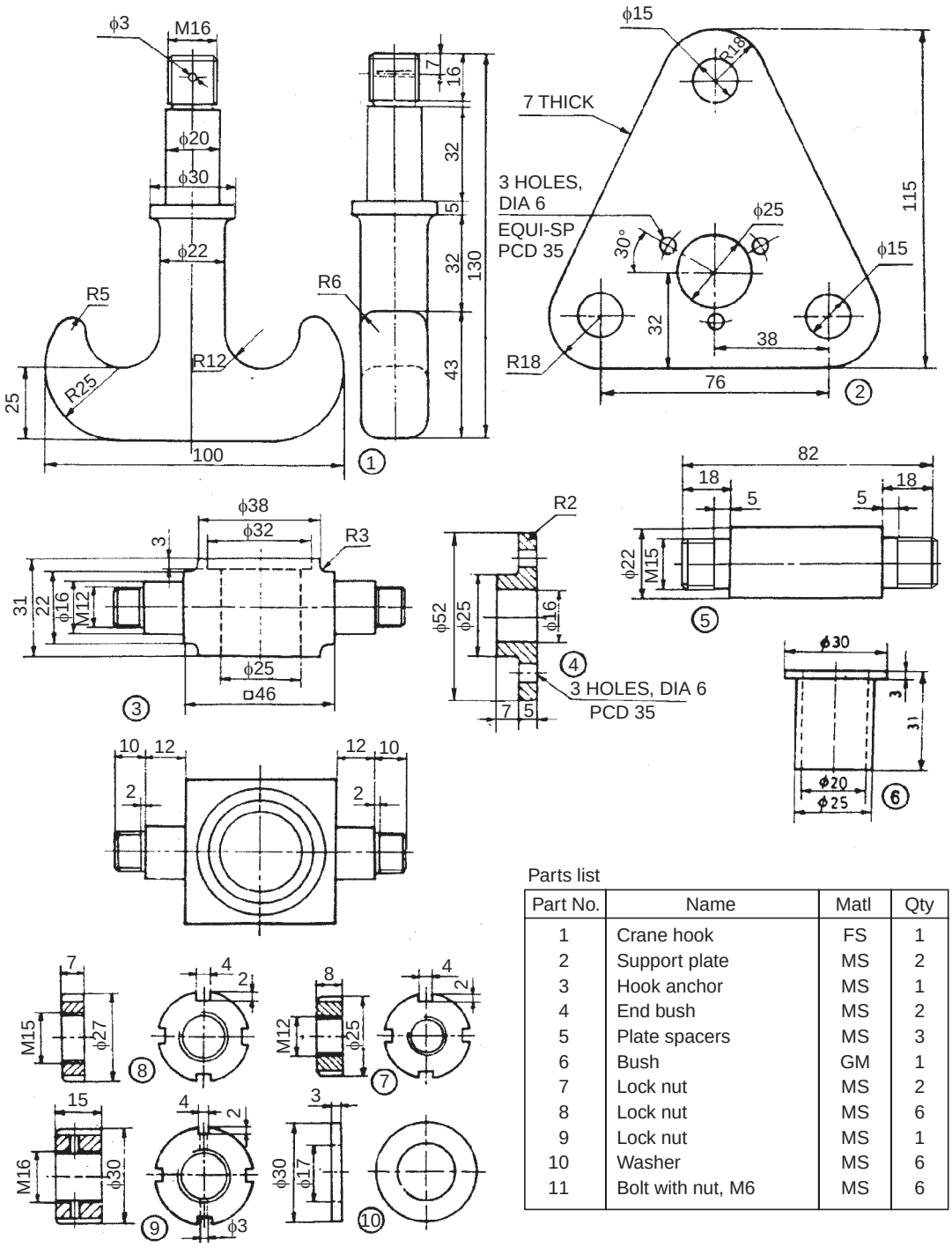

Parts list

Part No.	Name	Matl	Qty
1	Crane hook	FS	1
2	Support plate	MS	2
3	Hook anchor	MS	1
4	End bush	MS	2
5	Plate spacers	MS	3
6	Bush	GM	1
7	Lock nut	MS	2
8	Lock nut	MS	6
9	Lock nut	MS	1
10	Washer	MS	6
11	Bolt with nut, M6	MS	6

Fig. 18.49 Crane hook

www.EngineeringBooksPdf.com

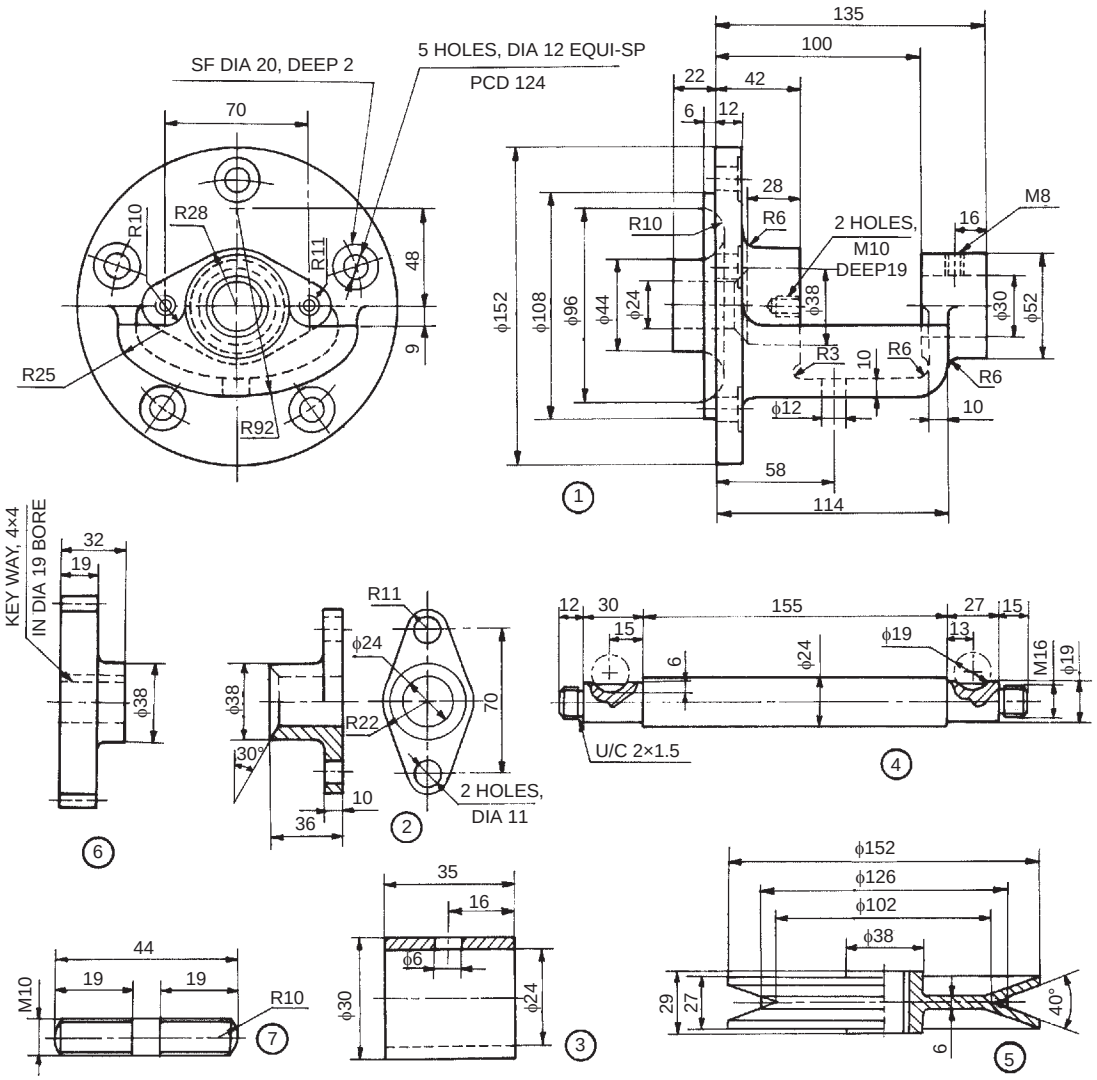

Parts list

Part No.	Name	Matl	Qty
1	Bracket	CI	1
2	Gland	CI	1
3	Bush	GM	1
4	Shaft	MCS	1
5	V-Pulley	CI	1
6	Gear wheel	MCS	1
7	Stud	MS	2

Fig. 18.50 V-belt drive

18.5.12 V-Belt Drive

The V-belt drive shown in Fig. 18.50 is used for converting the V-belt drive from the motor into a gear drive. The main shaft in the unit carries V-pulley at one end and the gear wheel at the other end.

www.EngineeringBooksPdf.com

The gland 2 is fastened to the bracket 1 by means of the studs 7 and nuts (not shown). The bush 3 is fitted into the bracket and positioned by means of a set screw (not shown). The shaft 4 is introduced into the above assembly and gear wheel 6 is mounted on the left side of the shaft and V-pulley 5 is mounted on the right side by means of woodruff keys (not shown). The gear wheel and V-pulley are fixed in position by means of two nuts (nut shown). The assembly permits free rotation of the shaft in the bracket, and the gland and the bush serve as bearings for the shaft.

Exercise

Figure 18.50 shows the details of a V-belt drive. Assemble the parts and draw the following views, to a suitable scale:

(*i*) Sectional view from the front and

(*ii*) View from the right (not showing the V-pulley).

18.5.13 Screw Jack

Screw jacks are used for raising heavy loads through very small heights. Figure 18.51 shows the details of one type of screw jack. In this, the screw 3 works in the nut 2 which is press fitted into the main body 1. The tommy bar 7 is inserted into a hole through the enlarged head of the screw and when this is turned, the screw will move up or down, thereby raising or lowering the load.

Exercise

Assemble all parts of the screw jack, shown in Fig. 18.51 and draw the following views:

(*i*) Half sectional view from the front, and

(*ii*) View from above.

18.5.14 Pipe Vice

Pipe vices are designed for holding pipes, to facilitate operations such as threading or cutting-off to required length. Figure 18.52 shows various parts of a pipe vice. To assemble the vice, the screw rod 4 is screwed into the base 1 from above. When the circular groove at the end of the screw rod is in-line with the 6 mm diameter transverse hole in the housing, the movable jaw 2 is inserted from below. After alignment, two set screws 3 are inserted into the jaw. This arrangement allows the jaw to move vertically without rotation when the handle is operated and the screw is turning.

The V-shaped base of the housing can accommodate pipes of different diameters. The serrations provided on the V-shaped end of the movable jaw provide effective grip on the pipe surface.

Exercise

The details of a pipe vice are shown in Fig. 18.52. Assemble the parts and draw, (*i*) view from the front, (*ii*) sectional view from the left and (*iii*) view from above.

18.5.15 Speed Reducer

Figure 18.53 shows the various parts of a speed reducer, using worm and worm wheel, which reduces the speed in a single step. It is used for large ratio of speed reduction and it is of the right angle drive type. However, when the speed is reduced in two stages, parallel shaft operation is possible.

The worm shaft 2 is placed in the housing 1 by introducing it through one end of the housing. The ball bearings 9 are fitted on either side of the worm shaft along with the oil seal 10.

www.EngineeringBooksPdf.com

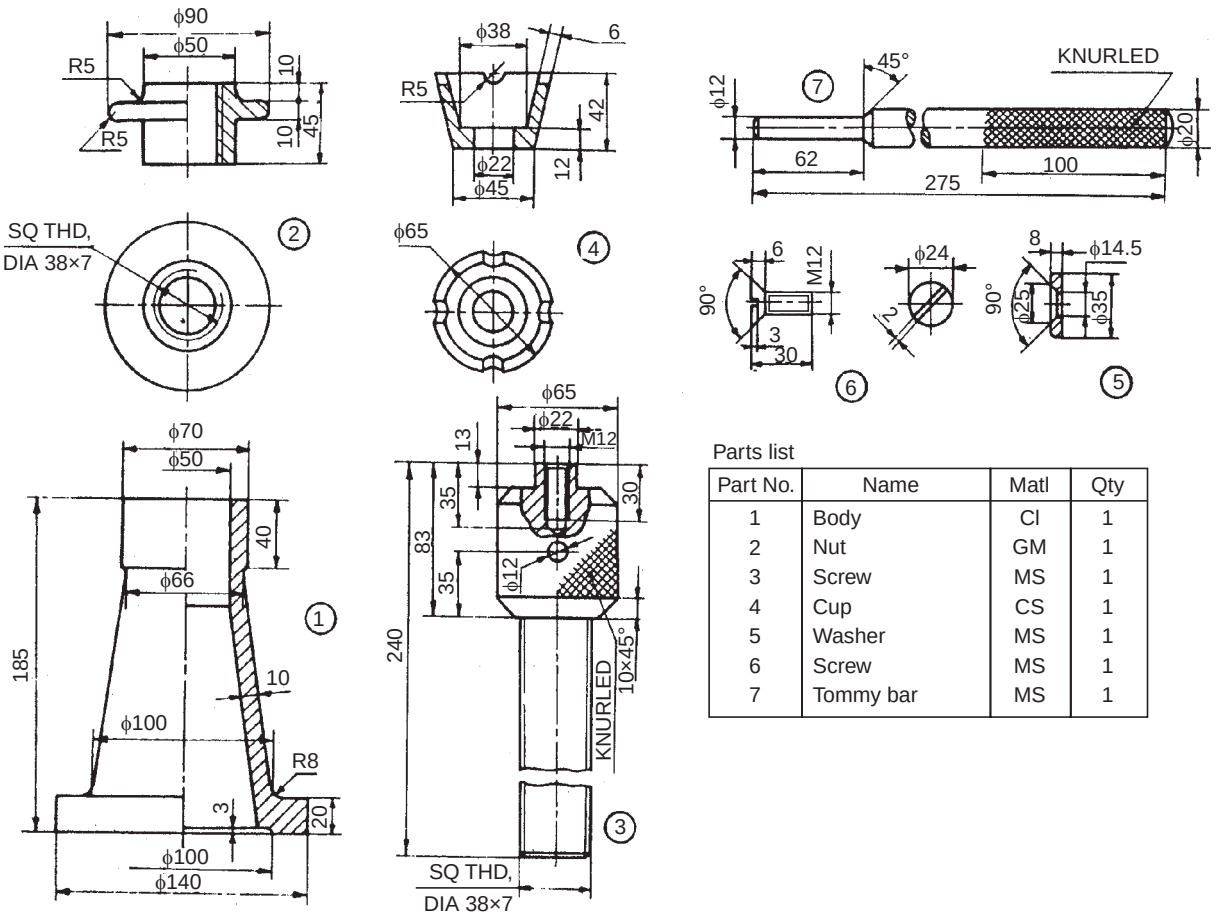

Parts list

Part No.	Name	Matl	Qty
1	Body	Cl	1
2	Nut	GM	1
3	Screw	MS	1
4	Cup	CS	1
5	Washer	MS	1
6	Screw	MS	1
7	Tommy bar	MS	1

Fig. 18.51 Screw jack

www.EngineeringBooksPdf.com

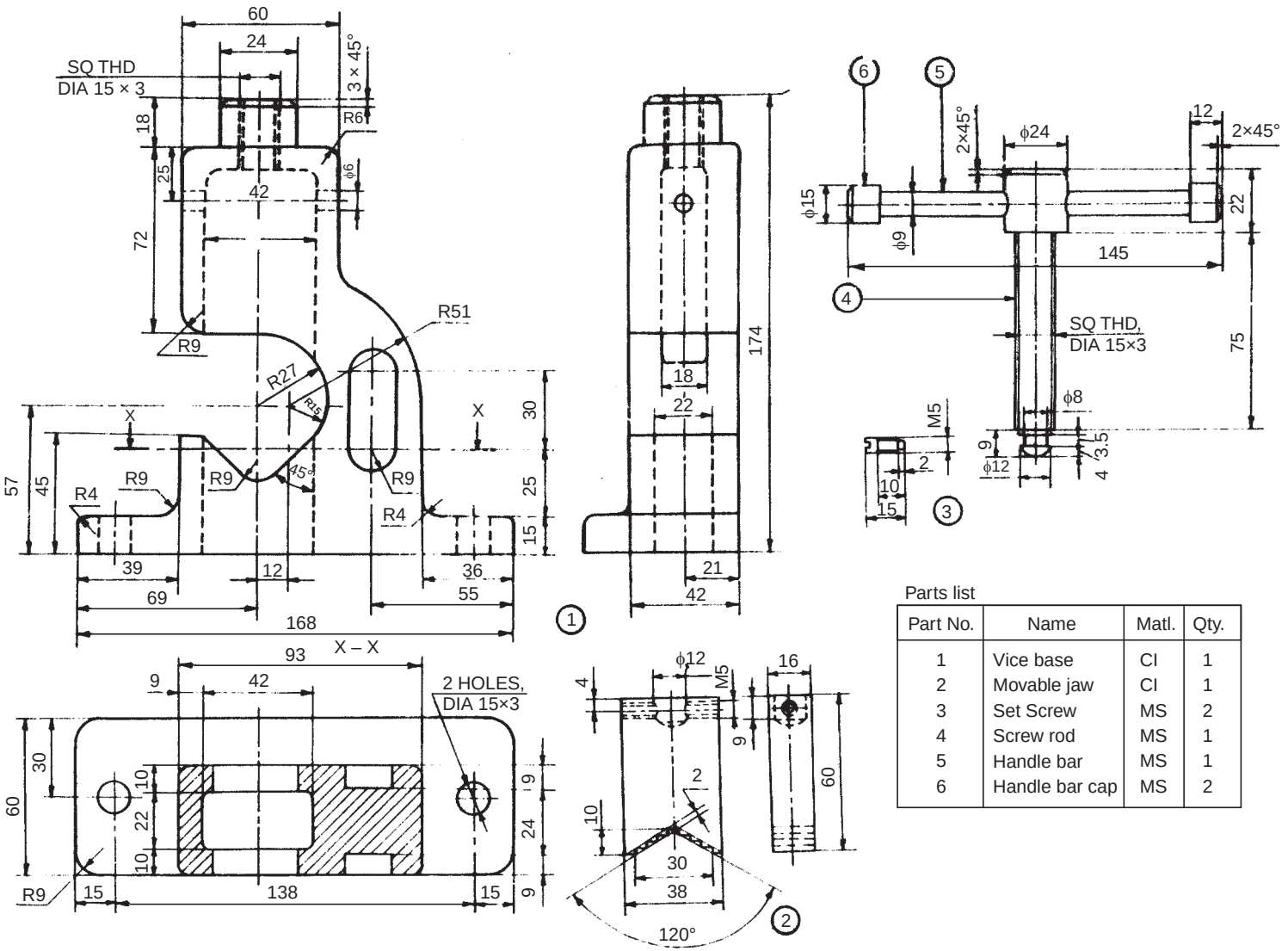

Parts list

Part No.	Name	Matl.	Qty.
1	Vice base	CI	1
2	Movable jaw	CI	1
3	Set Screw	MS	2
4	Screw rod	MS	1
5	Handle bar	MS	1
6	Handle bar cap	MS	2

Fig. 18.52 Pipe vice

www.EngineeringBooksPdf.com

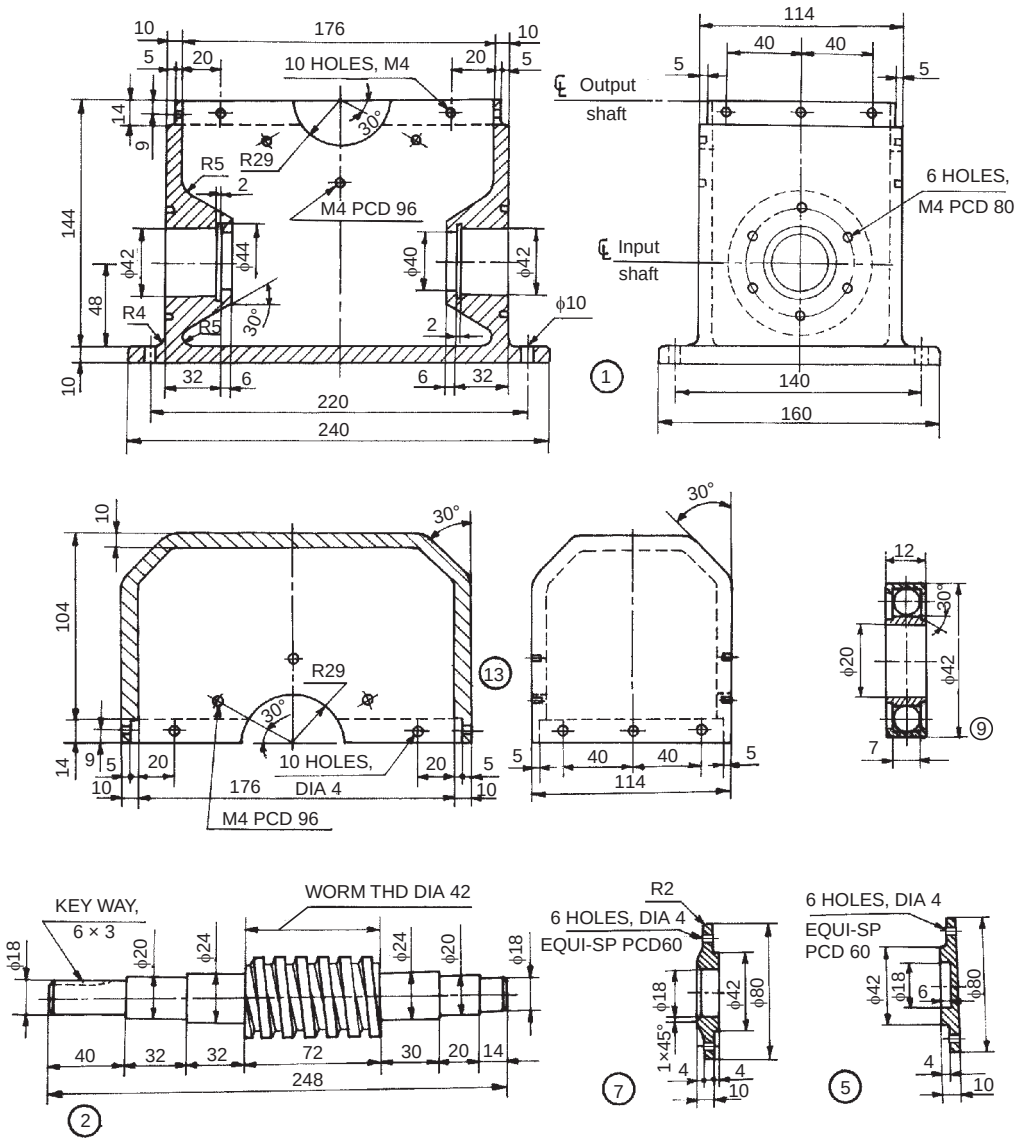

Parts list

Part No.	Name	Matl	Qty
1	Housing	CI	1
2	Worm shaft	MS	1
3	Wheel shaft	MS	1
4	Worm wheel	MS	1
5	End cover-closed	CI	1
6	Roller bearing	—	2
7	End cover	CI	1
8	End cover-wheel shaft	CI	2
9	Ball bearing	—	2
10	Oil seal	Rubber	2
11	Oil seal	Rubber	2
12	Top cover	CI	1

Fig. 18.53 Speed reducer (contd.)

www.EngineeringBooksPdf.com

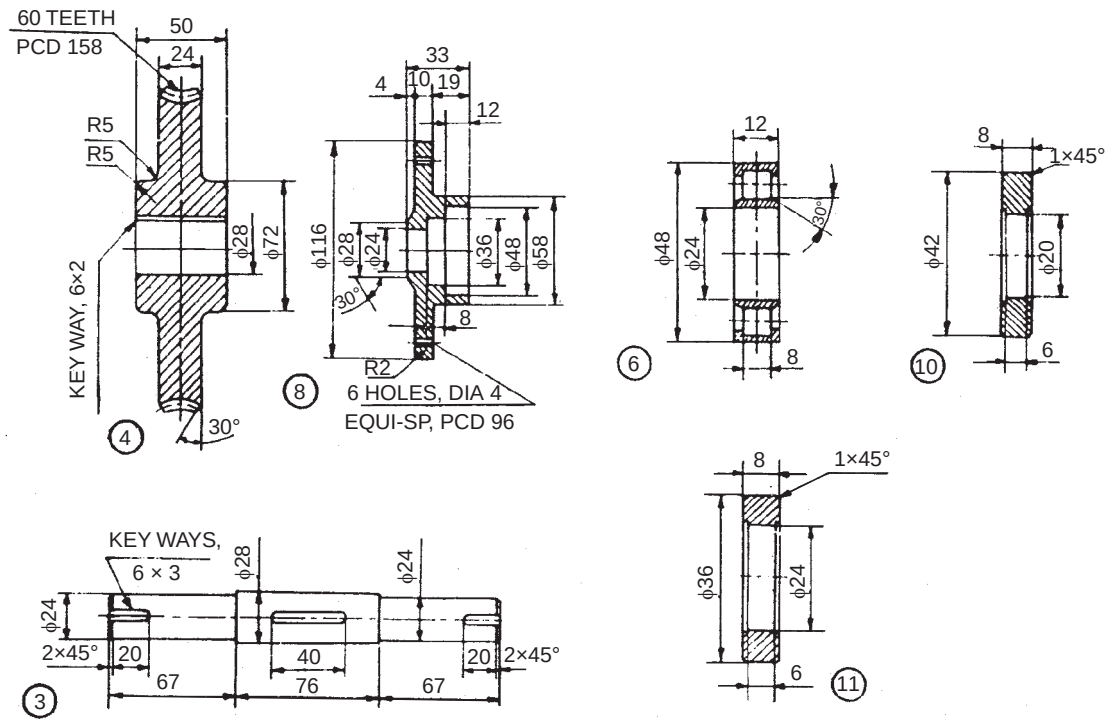

Fig. 18.53 Speed reducer

The closed end cover 5 is used on the right side of the worm shaft and fastened to the housing while end cover 7 is fastened to the housing on the left side.

The worm wheel 4 is fitted on the wheel shaft by means of a key. The oil seal 11 and roller bearing 6 are assembled in both the wheel shaft end covers 8. These end cover assemblies are located on the wheel shaft assembly and placed over the housing. The top cover 12 is placed over the housing and the wheel shaft end covers are fastened to both the housing and top cover, thus completing the assembly.

Exercise

The details of a single stage worm gear speed reducer are shown in the Fig. 18.53. Assemble the parts and draw to a suitable scale, (*i*) sectional view from the front and (*ii*) the view from the left.

SOLUTIONS FOR GUIDANCE

The assembly drawings are very critical and the principles of making the assembly drawings from the part drawings are explained in detail in the text. The preparation of assembly drawings from part drawings, require lot of skill. This can be achieved only through practice.

As a guide to the students, for majority of the projects considered in this chapter, one assembly drawing; plain or sectional, is presented. Some are included in the text itself and for the remaining ones, the views are given below. For example, Fig. 18.1A shows the assembly drawing of the components given in Fig. 18.1 and so on. The students are advised to study these views and develop other required ones.

www.EngineeringBooksPdf.com

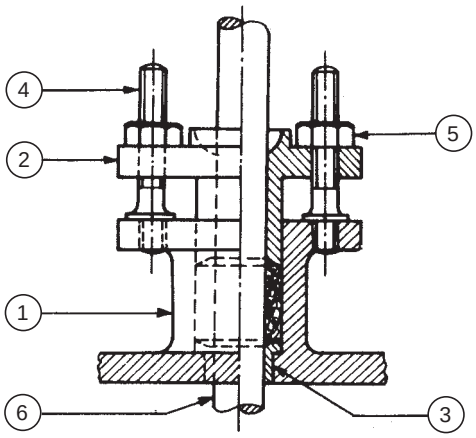

Fig. 18.1A Stuffing box

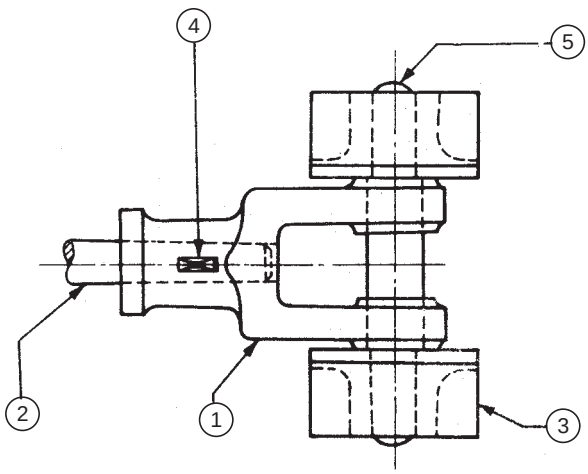

Fig. 18.2A Steam engine crosshead

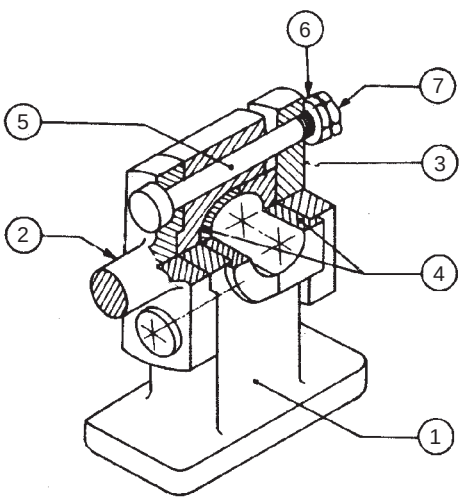

Fig. 18.3A Crosshead

www.EngineeringBooksPdf.com

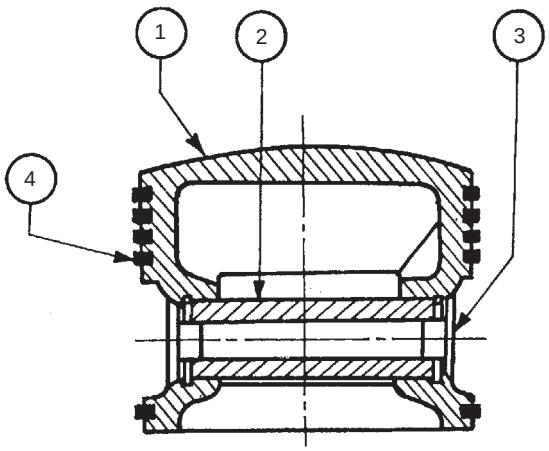

Fig. 18.6A Petrol engine piston

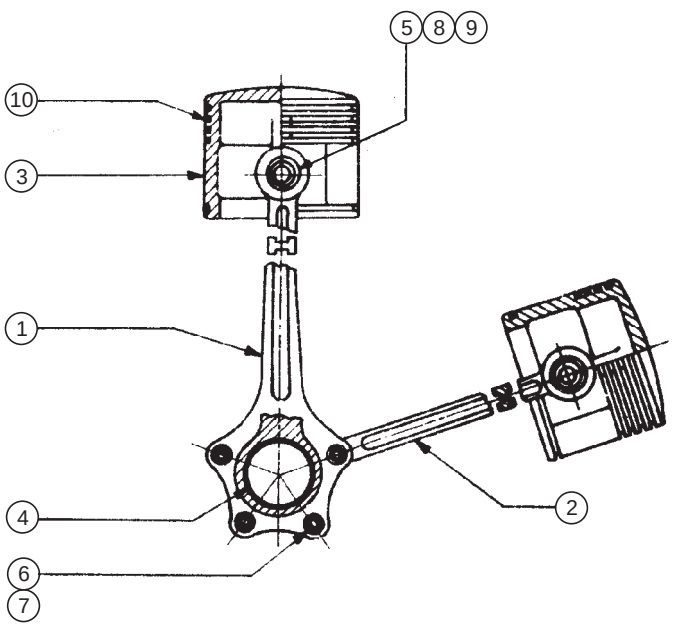

Fig. 18.7A Radial engine sub-assembly

www.EngineeringBooksPdf.com

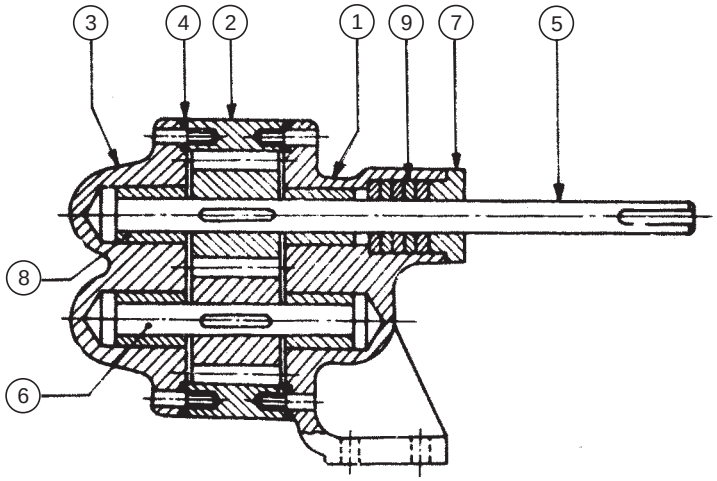

Fig. 18.9A Rotary gear pump

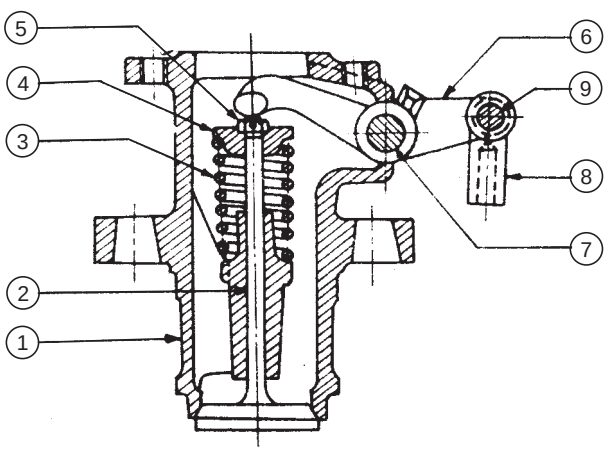

Fig. 18.10A Air valve

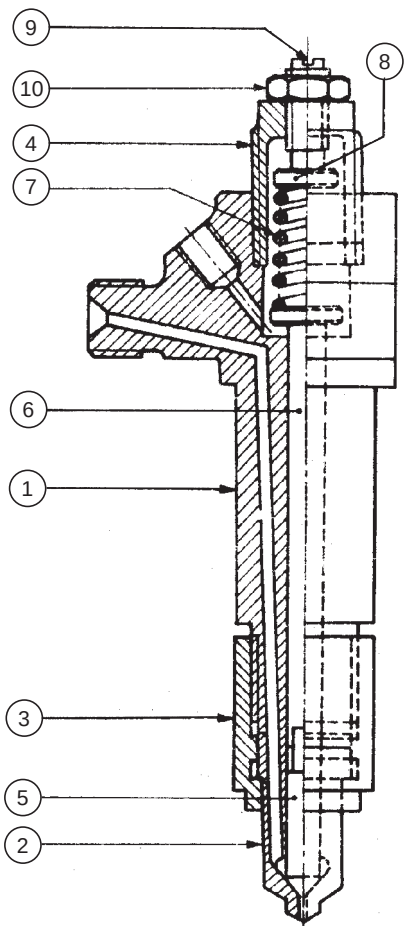

Fig. 18.11A Fuel injector

www.EngineeringBooksPdf.com

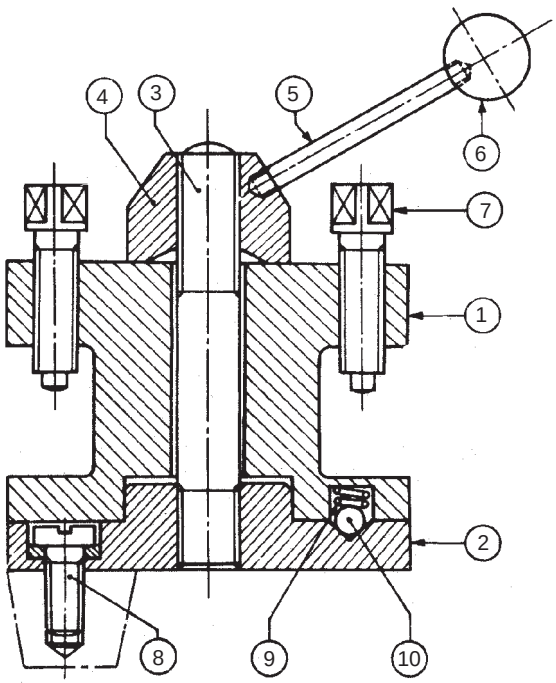

Fig. 18.15A Square tool post

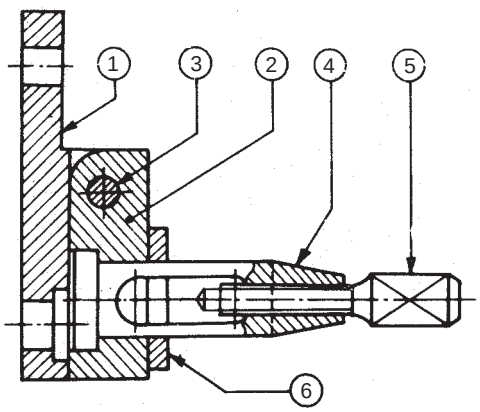

Fig. 18.16A Clapper block

www.EngineeringBooksPdf.com

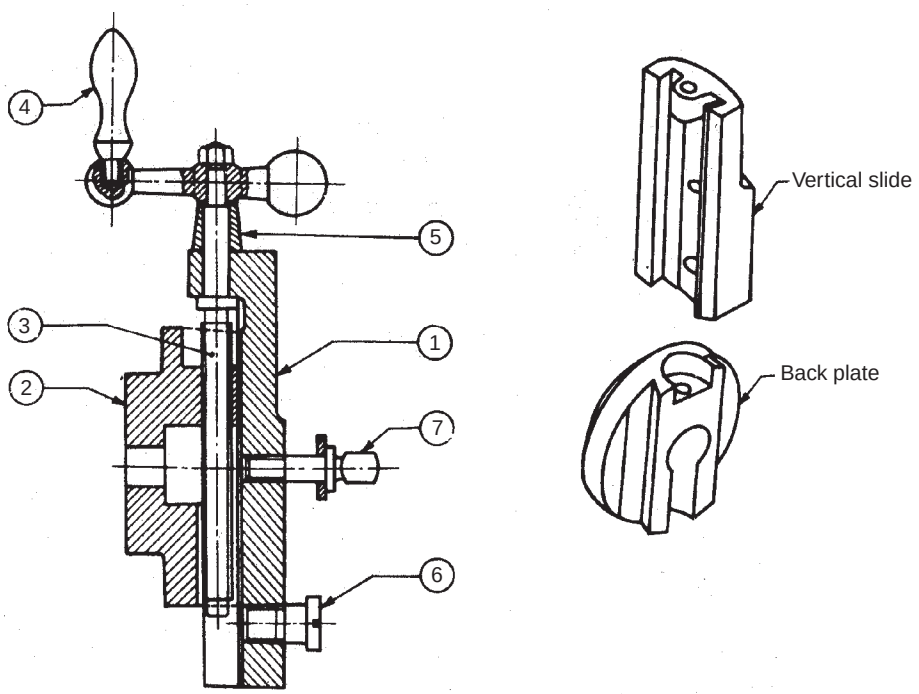

Fig. 18.17A Shaper tool head slide

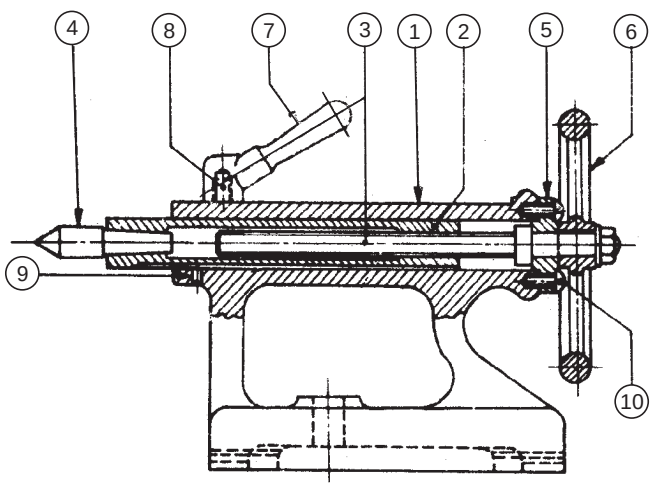

Fig. 18.18A Lathe tail-stock

www.EngineeringBooksPdf.com

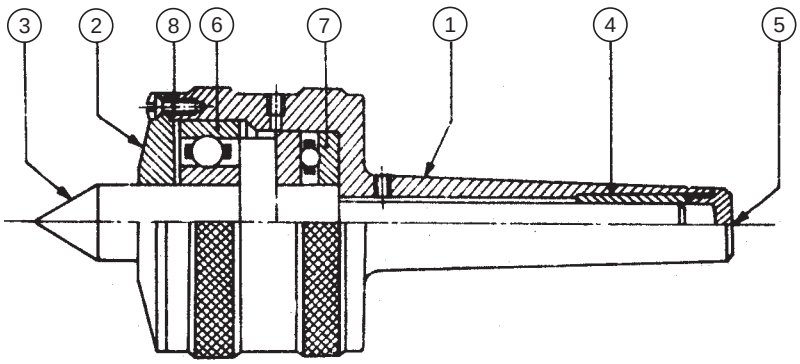

Fig. 18.20A Revolving centre

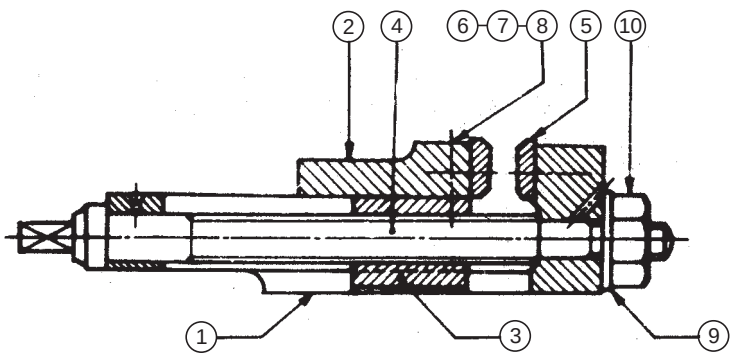

Fig. 18.22A Machine vice

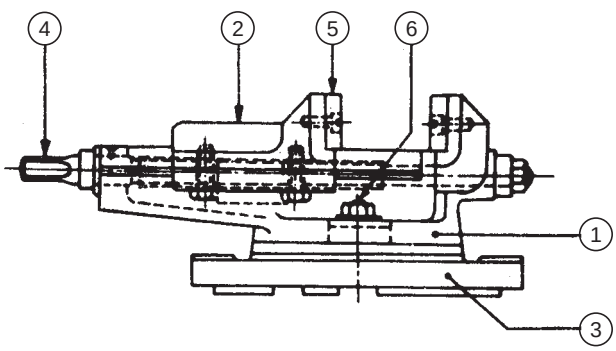

Fig. 18.23A Swivel machine vice

www.EngineeringBooksPdf.com

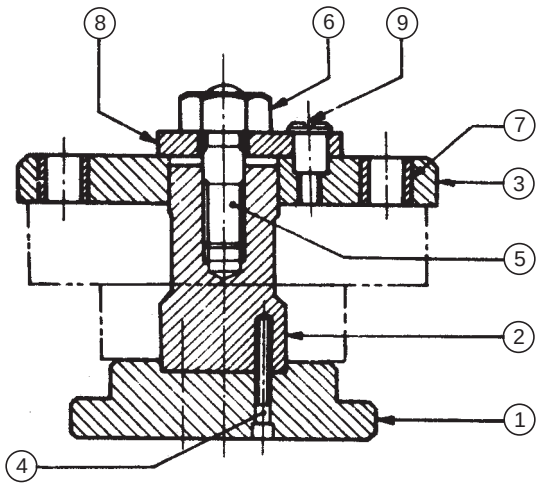

Fig. 18.24A Drill jig

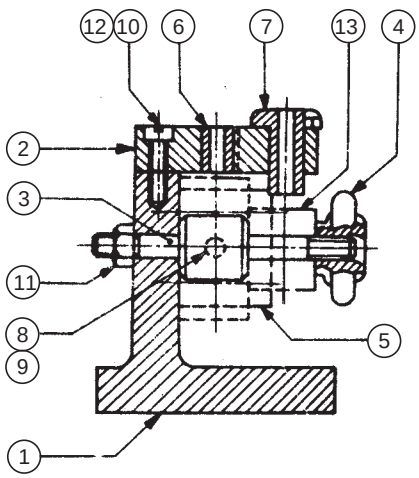

Fig. 18.25A Indexing drill jig

www.EngineeringBooksPdf.com

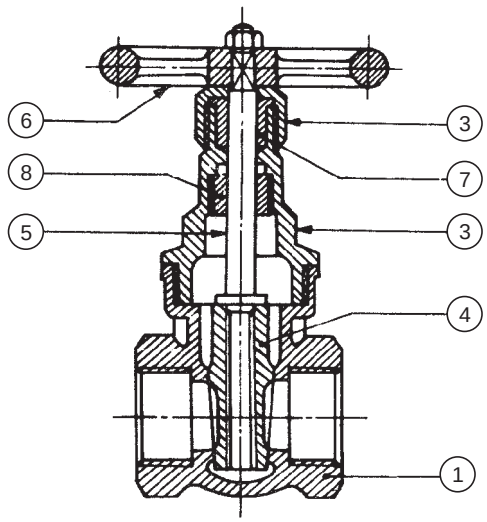

Fig. 18.28A Gate valve

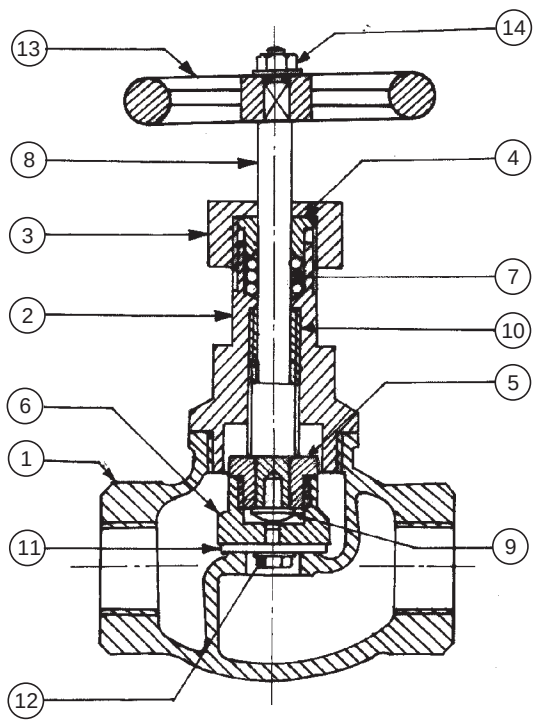

Fig. 18.29A Screw down stop valve

www.EngineeringBooksPdf.com

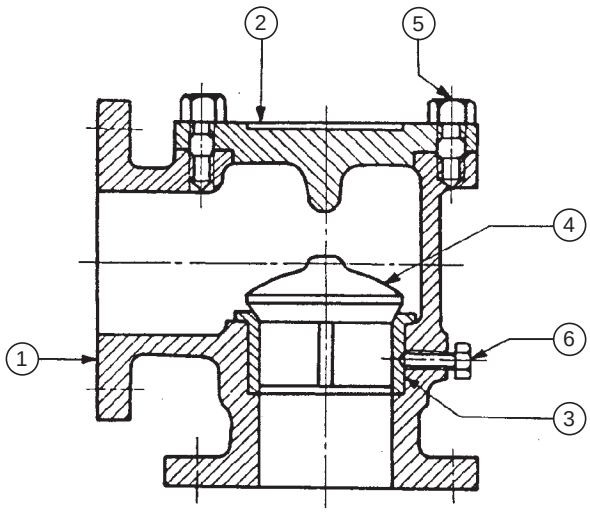

Fig. 18.30A Non-return valve (Light duty)

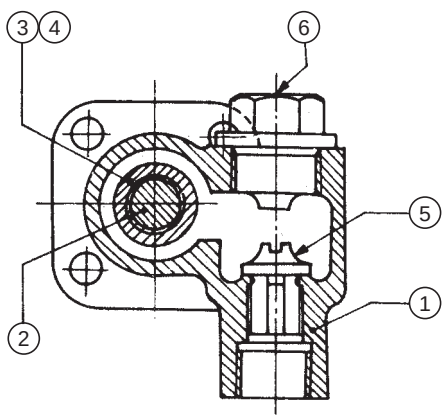

Fig. 18.31A Non-return valve

www.EngineeringBooksPdf.com

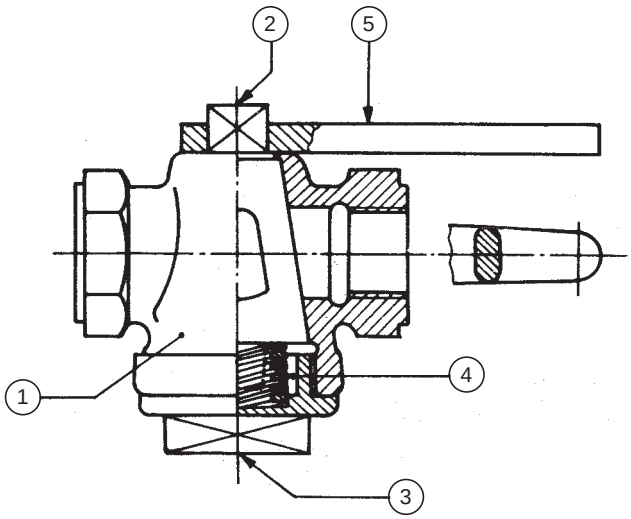

Fig. 18.32A Air cock

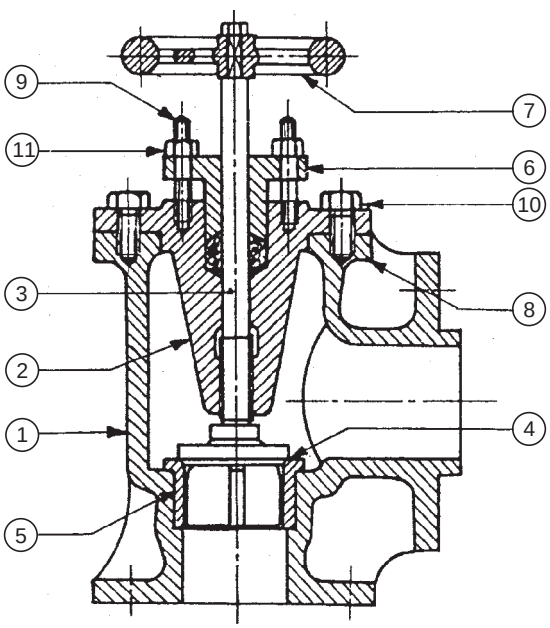

Fig. 18.34A Feed check valve

www.EngineeringBooksPdf.com

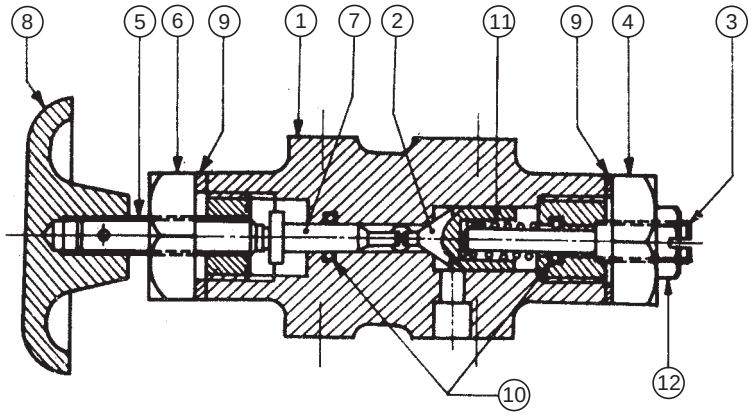

Fig. 18.35A Pressure relief valve

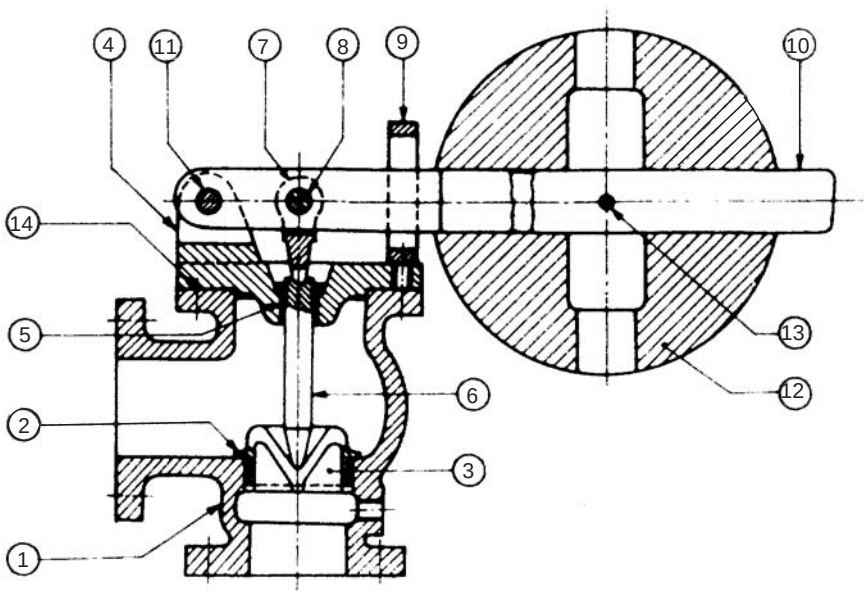

Fig. 18.36A Lever safety valve

www.EngineeringBooksPdf.com

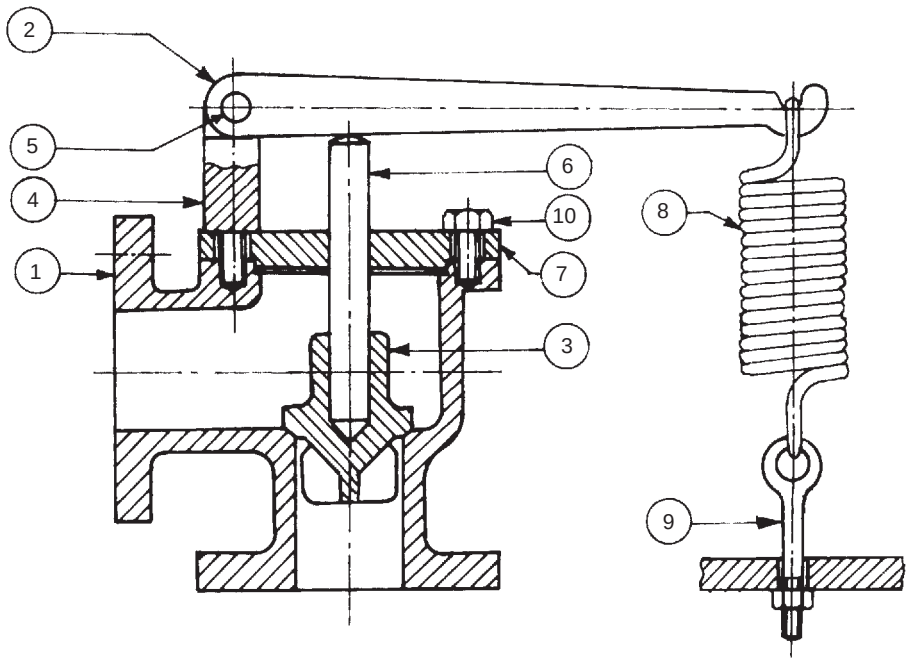

Fig. 18.37A Spring loaded relief valve

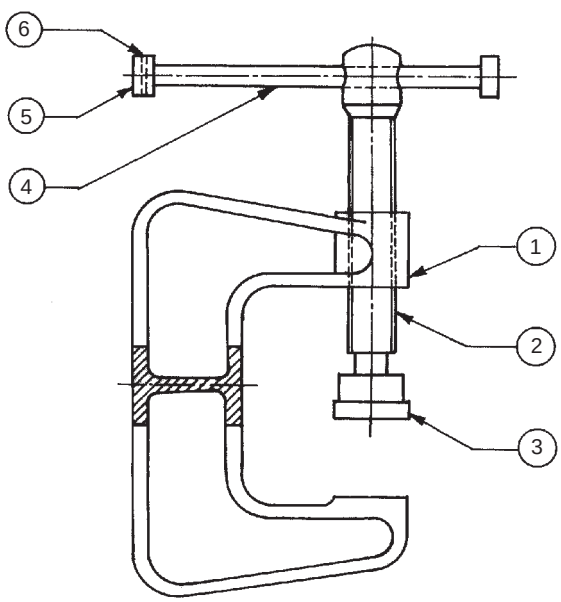

Fig. 18.48A C-clamp

www.EngineeringBooksPdf.com

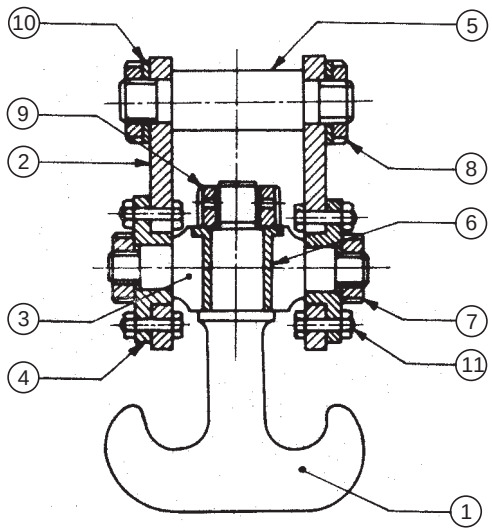

Fig. 18.49A Crane hook

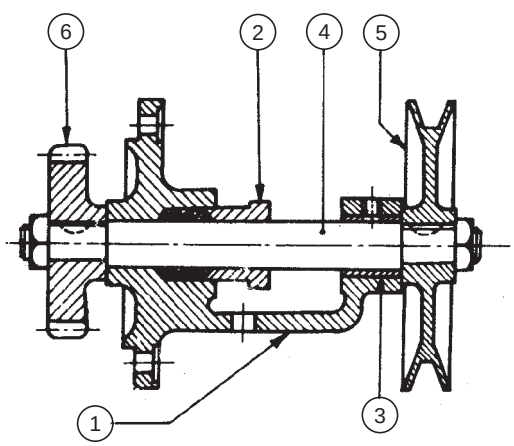

Fig. 18.50A V-belt drive

www.EngineeringBooksPdf.com

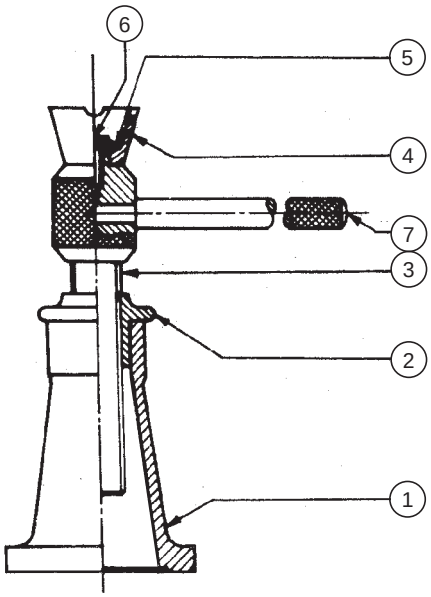

Fig. 18.51A Screw jack

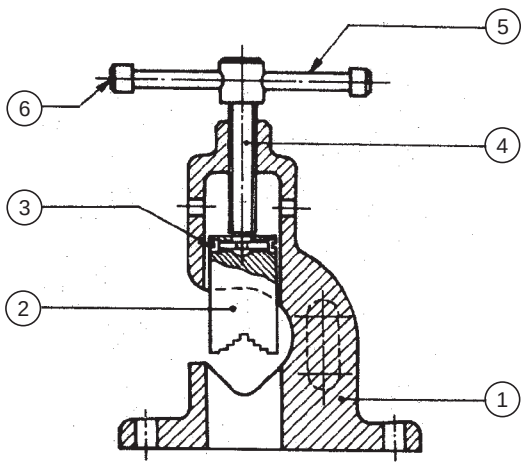

Fig. 18.52A Pipe vice

www.EngineeringBooksPdf.com

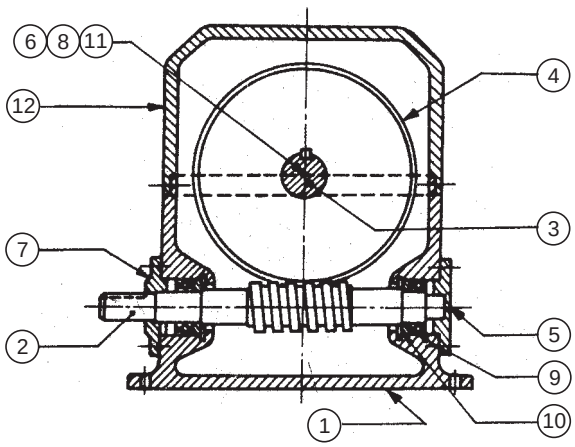

Fig. 18.53A Speed reducer

www.EngineeringBooksPdf.com

19

PART DRAWINGS

19.1 INTRODUCTION

The first step in developing a new machine is the preparation of design assembly drawings. After the drawing is analysed thoroughly, final assembly drawings are made from these drawings. To facilitate the manufacture of the unit, individual parts of the unit are to be produced first, which requires the preparation of part drawings. These are prepared from the final assembly drawings. The part drawing must contain all the information required such as size and shape description, dimensions, notes, suitable material, etc., to enable the student to understand the functional aspects of the unit.

In the classroom training process, students are given final assembly drawings from which they are required to prepare part drawings. The assembly drawings may contain a few details only, such as centre distances, locating dimensions and overall dimensions. However, the student is expected to use the assembly drawing as a guide to prepare the part drawings. While doing so, the detailed dimensions to make part drawings can be transferred directly from the assembly drawings, according to the scale to which they are made.

The students are expected to read the assembly drawings carefully and visualise the shapes of individual parts, before making part drawings. For this purpose, the students are advised to be thorough with the subject of blueprint reading (Chapter 17).

The steps to be followed to prepare part drawings from the assembly drawing are:

1. Understand the assembly drawing thoroughly, by referring to the parts list and the different orthographic views of the unit.
2. Study the functional aspect of the unit as a whole. This will enable to understand the arrangement of the parts.
3. Visualise the size and shape of the individual components.
4. As far as possible, choose full scale for the drawing. Small parts and complicated shapes may require the use of enlarged scales so that their presentation will have a balanced appearance.
5. Select the minimum number of views required for describing each part completely. The view from the front selected must provide maximum information of the part.
6. The undermentioned sequence may be followed for preparing different views of each part :
   (*i*) Draw the main centre lines and make outline blocks, using the overall dimensions of the views.
   (*ii*) Draw the main circles and arcs of the circles.

www.EngineeringBooksPdf.com

(*iii*) Draw the main outlines and add all the internal features.

(*iv*) Cross-hatch the sectional views.

(*v*) Draw the dimension lines and add dimensions and notes.

7. Check the dimensions of the mating parts.
8. Prepare the parts list and add the title block.

Exercises

Prepare the part drawings of the engine parts, machine tool parts and accessories and miscellaneous parts shown in Figs. 19.1 to 19.22.

19.2 ENGINE PARTS

19.2.1 Petrol Engine Connecting Rod

Figure 19.1 shows the assembly drawing of a petrol engine connecting rod, the big end of which is split into two halves. It is used in center crank engines.

The bearing bush 4 which is in one piece, is fitted at the small end of the connecting rod 1. The small end of the rod is connected to the piston. The main bearing bush, which is split into two halves, is placed at the big end of the connecting rod. The big end of the rod is connected to the crank pin of the center crank. First, the split bearing brasses 3 are placed on the crank pin, then the big end of the connecting rod and the cap 2 are clamped onto these, by means of two bolts 5 and nuts 6.

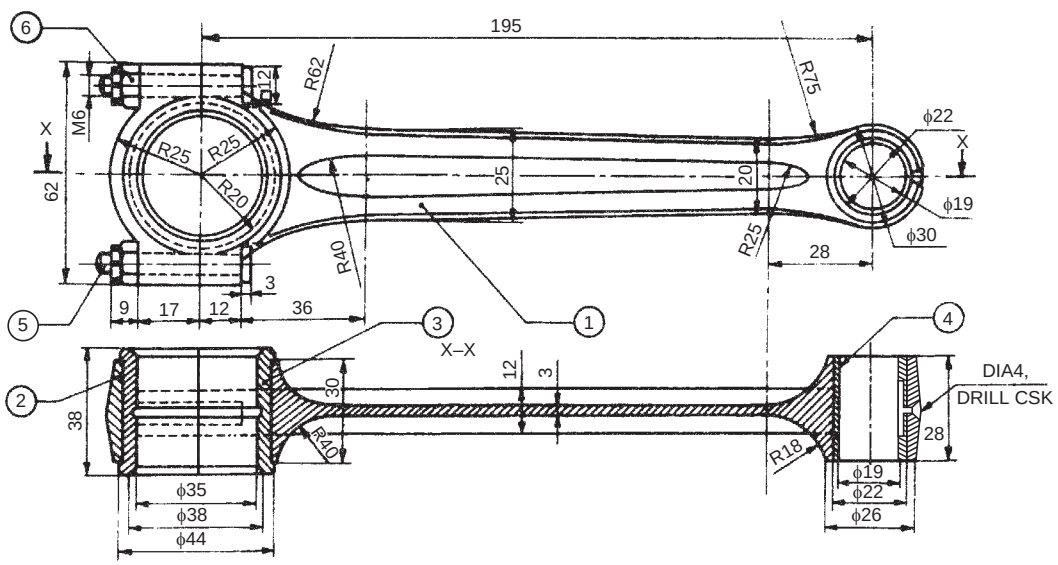

Parts list

Part No.	Name	Matl.	Qty.
1	Rod	FS	1
2	Cap	FS	1
3	Bearing brass	GM	2
4	Bearing bush	P Bronze	1
5	Bolt	MCS	2
6	Nut	MCS	2

Fig. 19.1 Petrol engine connecting rod

www.EngineeringBooksPdf.com

The bearing brasses are made of gun-metal, because it has good resistance to corrosion. Oil groove is provided at the centre of the bearing. The bearing bush is made of phosphor bronze to provide low coefficient of friction. Oil groove is provided in this bush for lubrication between the pin and bearing.

19.2.2 Marine Engine Connecting Rod End

Marine engines are generally of slow-speed and high-power type. As such, all parts of a marine engine have to be sturdy and strong.

Figure 19.2 shows the assembly drawing of a big end of a marine engine connecting rod. It mainly consists of a rod, a bearing in two halves, a cover plate and bolts. In the case of petrol engine, one half of the bearing is an integral part of the connecting rod, whereas in a marine engine, the bearing halves are separate components to facilitate assembly of the heavy parts of the connecting rod.

After the two halves of the bearing brasses 3 have been placed around the crank pin, the cover plate 2 is placed in position and then all these are fastened to the rod end 1 by means of bolts 4 and nuts 5. Two snugs 7, one on each bolt, are provided to prevent rotation of the bolts. Split cotters 6 are used as locking devices for the bolts.

19.2.3 Steam Engine Connecting Rod End

In a steam engine, connecting rod is used for connecting the crank with the crosshead. It may be of rectangular or circular in cross-section. The two ends of the rod are referred to as big end and small end.

Figure 19.3 shows one particular design of a big end of a steam engine connecting rod, connected to the crank with the help of the strap 3. The end of the connecting rod 1 is forged to a rectangular section and the brasses 2 are carried by the strap. The strap and the rod end are fastened to each other by means of a gib 4 and a cotter 5. The cotter has a taper on one side only and is prevented from slackening by the set-screw 6.

19.2.4 Spark Plug

In a petrol engine, fuel under high pressure is ignited by producing intense sparks by means of a spark plug. Figure 19.4 shows an assembly drawing of a spark plug with various parts indicated. In this, the central electrode 3 is screwed into the insulator 2. The insulator is fitted into the shell 1 by means of a nut 4 and is made gas tight in the shell by lower 7 and upper 8 sealing gaskets respectively. The upper end of the central electrode is threaded to receive the plug terminal 6. The high tension (HT) cable connector is fitted to this terminal.

The lower end of the central electrode extends slightly beyond the bottom surface of the shell. Ground electrode 5 is welded to the bottom face of the shell 1. The ground electrode is bent over at right angle so that a spark gap is formed between the two electrodes.

19.2.5 Steam Engine Crosshead

The crosshead in a steam engine, acts as a link between piston rod on one side and connecting rod on the other. Figure 19.5 shows the assembly drawing of a steam engine crosshead. It consists of the shoes 2 which are fitted into the crosshead body 1, using the circular projections provided in the shoes. The shoes are confined to move along the guides provided in the engine frame.

The piston rod is connected to the body by means of the cotter 7. The connecting rod (not shown in the figure) is connected to the crosshead by a pin joint. The bearing 3 is in two pieces and the wedge block 4 and the bolt and nut assembly 5 are used for bearing adjustment.

www.EngineeringBooksPdf.com

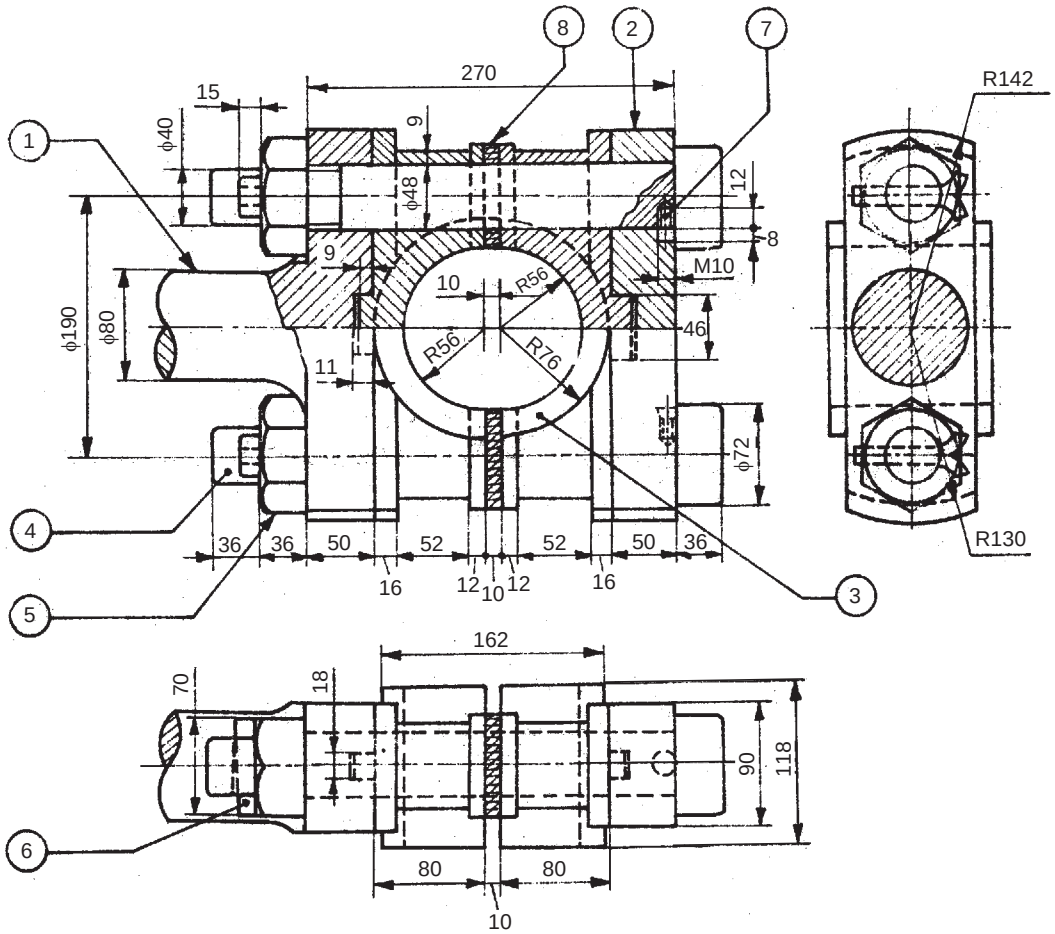

Parts list

Part No.	Name	Matl.	Qty.
1	Rod end	FS	1
2	Cover end	FS	1
3	Bearing brass	GM	2
4	Bolt M54 × 360	MS	2
5	Nut, M54	MCS	2
6	Cotter	MCS	2
7	Snug	MS	2
8	Leather packing		

Fig. 19.2 Marine engine connecting rod end

www.EngineeringBooksPdf.com

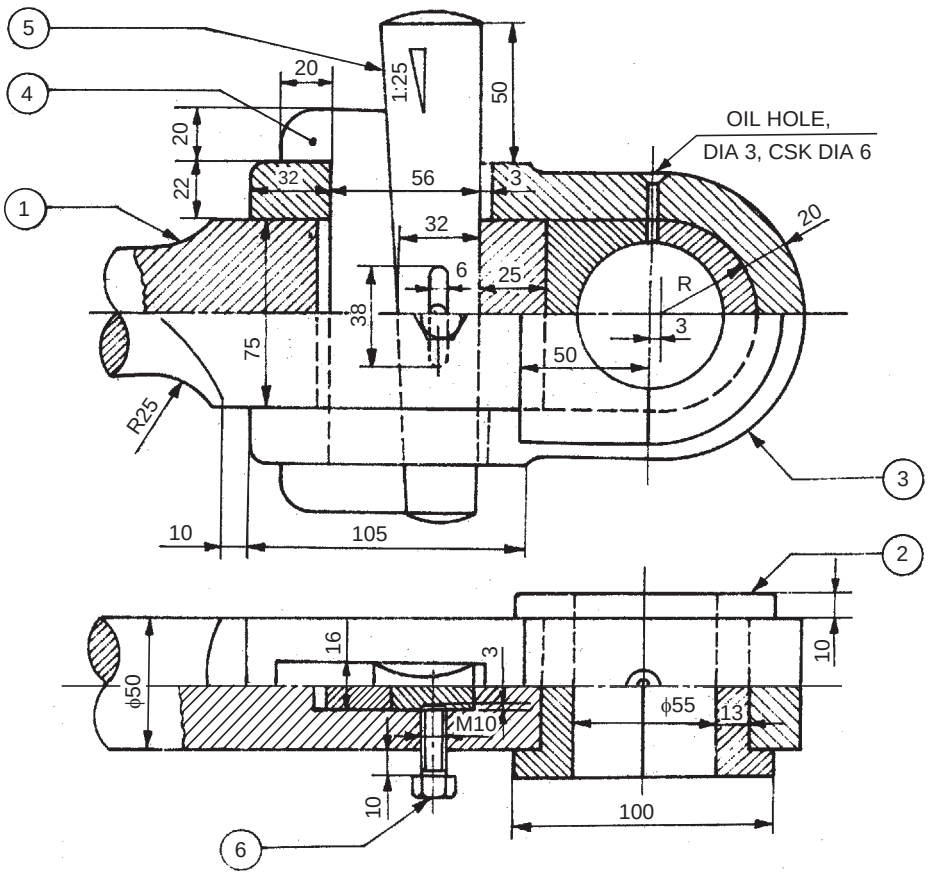

Parts list

Part No.	Name	Matl.	Qty.
1	Connecting rod	FS	1
2	Brasses	GM	2
3	Strap	MS	1
4	Jib	MS	1
5	Cotter	MCS	1
6	Set-screw	MCS	1

Fig. 19.3 Steam engine connecting rod end

www.EngineeringBooksPdf.com

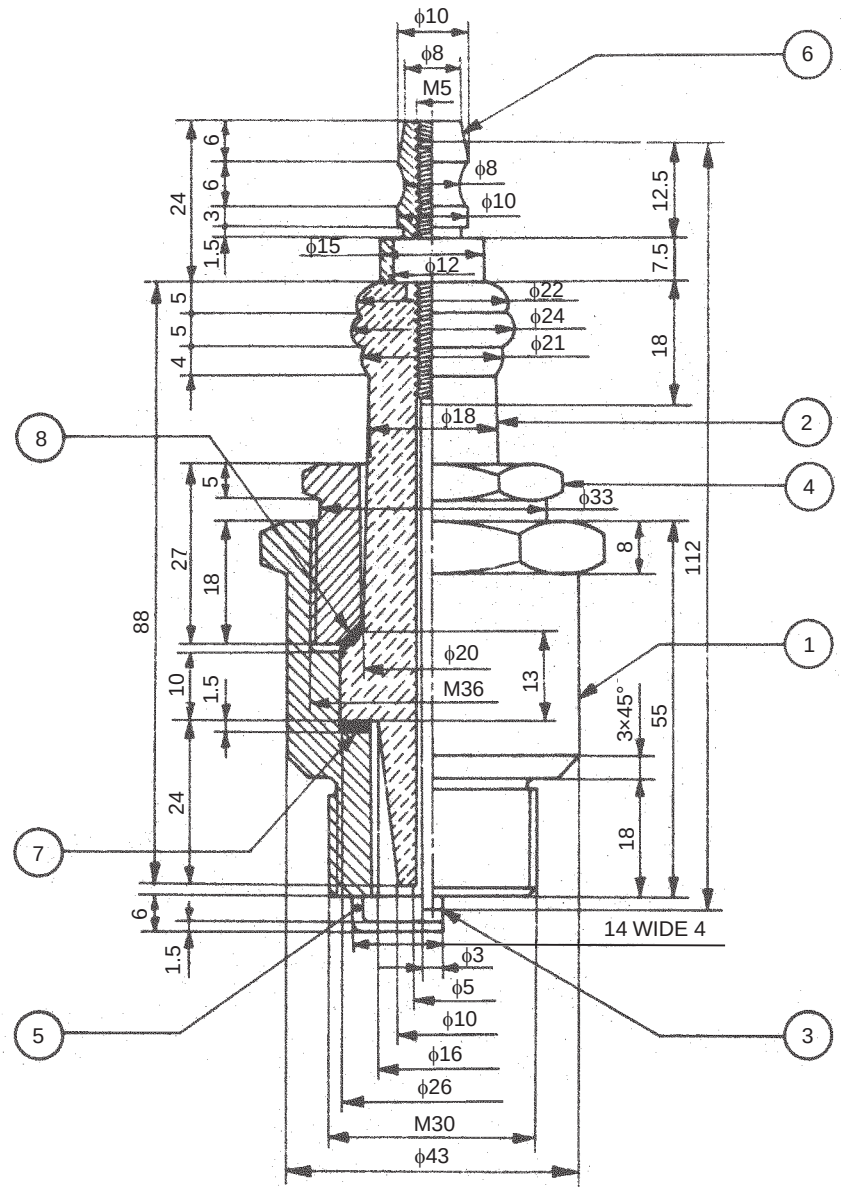

Parts list

Part No.	Name	Matl.	Qty.
1	Shell	MCS	1
2	Insulator	Porcelain	1
3	Central electrode	Nickel	1
4	Nut	MCS	1
5	Ground electrode	Nickel	1
6	Terminal	Brass	1
7	Sealing gasket	Asbe-	1
8	Sealing gasket	stos	1

Fig. 19.4 Spark plug

www.EngineeringBooksPdf.com

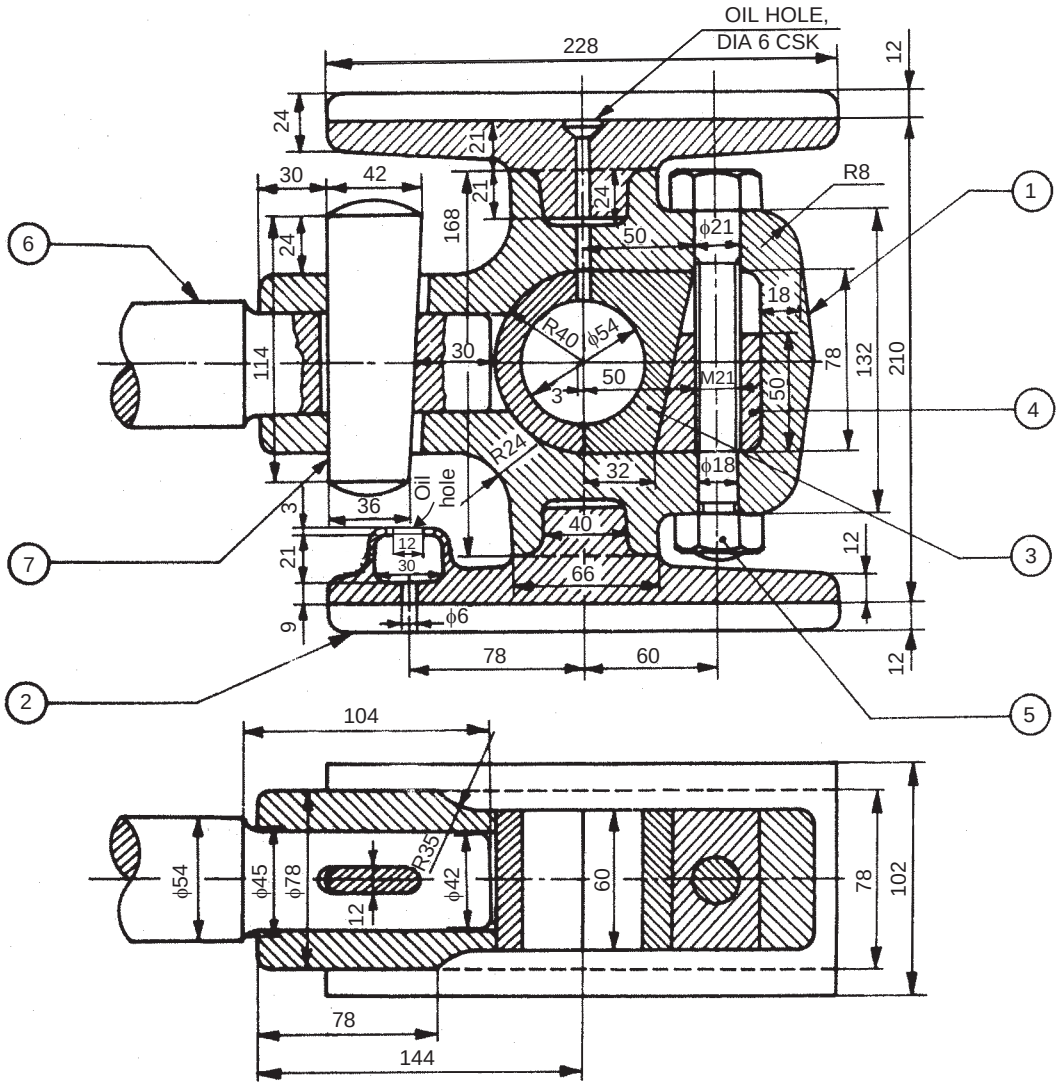

Parts list

Part No.	Name	Matl.	Qty.
1	Crosshead body	WI	1
2	Shoe	CI	2
3	Bearing	GM	1
4	Wedge block	MS	1
5	Bolt and nut	MCS	1
6	Piston	FS	1
7	Cotter	MCS	1

Fig. 19.5 Steam engine crosshead

www.EngineeringBooksPdf.com

19.2.6 Automobile Gear Box

19.2.6.1 Introduction

The top speed of a car depends upon the maximum power of its engine, and this is developed near the engine's maximum power. A typical car engine may run at 4000 rpm for a top speed of 110 kmh. But road wheels of average size turn at only about 1000 rpm to cover 100 km in an hour. So, they cannot be connected directly to the engine. There must be a system which allows the road wheels to make one revolution for every four of the engine. This is done by a reduction gear in the final drive (differential).

The relation between the rotational speed of the engine and the wheels is the axle ratio; 4:1 being common. As long as the car is driven at a steady speed on the level, this gearing is sufficient but when the car meets a hill, its speed will drop and the engine will falter and stall. A slow-running engine cannot provide enough torque for climbing hills or starting from rest. Selecting a lower gear enables the engine to run faster in relation to the road wheels and also multiplies the torque.

19.2.6.2 Gear Ratios

The lowest gear in the gear box must multiply the engine torque sufficiently to start the fully laden car moving up a steep hill. A small car needs a lower gear ratio of 3.5:1. Other typical gear ratios in a small car with a four-speed gear box are 2:1 in second, 1.4:1 in third and 1:1 in top gear. All these are multiplied by the axle ratio, so that, if the axle ratio is 4:1, the corresponding ratios between the engine speed and the road wheel speed are 14:1, 8:1, 5.6:1 and 4:1.

19.2.6.3 Transmission

The gear box shown in Fig. 19.6 is a constant-mesh type in which all the gear wheels cannot be fixed to their shafts. There has to be a system which permits all the gear wheels except those required for a particular ratio, to run freely. Usually, all the gear wheels on one shaft are fixed to it and the wheels on the other shaft can revolve freely around their shaft until a ratio is selected. Then, one of the free-running wheels is locked to the shaft, and that pair of wheels can transmit power.

Transmission gears are made of high quality steel, carefully heat-treated to produce smooth, hard surface gear teeth with a softer but very tough interior. They are usually drop-forged. The teeth on transmission gears are of two principal types: spur and helical. The helical gear is superior in that it turns more quietly and is stronger because more tooth area is in contact.

The locking of the gear wheels to a shaft is done by collars, which are splined to the shaft. This method of fixing, allows the collar to revolve with the shaft and also slide along, to lock onto the gear wheel on either side, or remain between them, allowing both to spin freely.

Around each collar, is a groove engaged by a two-pronged fork which is fixed to a sliding rod mounted in the gear box housing. One, two or three of these selector rods are linked to the gear lever. Moving the gear lever causes selector rod to slide to or fro. As it slides, the collar gripped by the selector fork is slid along the shaft to engage with, or move away from, a gear.

19.2.6.4 Synchromesh for Smooth Gear Changes

In the simplest type of constant mesh gear box shown, the gears may be engaged simply by shifting the gear lever from one position to the next as fast as possible. To do the job more quietly and smoothly, the pair of dogs had to be allowed to reach the same speed, so that they would slide together without clashing.

Drivers today are relieved from the need for double de-clutching for change of speeds by a synchronising device built into the sliding collars in the gear box. This synchromesh device is usually fitted to all forward gears. Synchromesh works like a friction clutch. It has a collar which

www.EngineeringBooksPdf.com

is in two main parts. A sleeve with internal cones [Fig. 19.6 (*c*)] slides inside the toothed outer ring, which forms the dogs to match the gear wheel cones with the parts rotating at the same speed. The spring loaded outer ring of the collar is pushed forward for the dogs to mesh.

When the collar is pushed towards the gear wheel with which it is to mesh, a conical ring on the gear wheel in front of the dogs comes into contact with the surface of a matching conical hole in the collar. The friction between the conical surfaces, brings the free-running gear wheel up or down to the speed of the output shaft. The collar continues to move along and the pair of dogs slide smoothly into mesh. However, if the gear lever is moved too fast, the gears will clash.

A typical automobile gear box consists of a cast iron or an aluminium housing, four shafts, bearings, gears, synchronising device and a shifting mechanism. Figure 19.6 shows the assembly of such a gear box, partially sectioned. This gear box provides four forwardes speeds of the ratios 4:1, 2.4:1, 1.4:1 and 1:1 and a reverse speed.

19.2.6.5 Working

Figure 19.6 (*a*) shows the gear box in its neutral position. The housing 1 is made of aluminium alloy and a supporting plate 2 is fixed to it for supporting the reverse gear shaft 5 at one end; the other end being located in the rib provided inside the housing. The input shaft 3 is supported by a ball bearing 7. One end of the output shaft is supported by a ball bearing, while the other end is located with free running fit, inside the bore (ϕ 15) provided at the inner end of the input shaft. The intermediate shaft 4 is supported both sides by the ball bearings.

The gears B, C and E are keyed in position on the intermediate shaft. The gear G is integral with the shaft. The gear A is keyed onto the input shaft. The gears D and F are constantly in mesh with the gears C and E but free to rotate on the output shaft when not engaged. The gear H is integral with the toothed ring 8 and slides on the sleeve 11 when operated by the fork 14. The sleeve 11 is splined to the output shaft and has external splines also on which the toothed ring 8 along with gear H slides on a single collar.

Similarly, the sleeve 10 is splined to the output shaft at its inner end, on which is fixed the toothed ring 9 with internal splines and slides over the sleeve when operated by the fork 13. Three spring loaded balls 12 are provided between the sleeve and the ring to keep them together as a single collar during free running and also when engaged with the toothed dogs [Fig. 19.6 (c)]. The bushes 15 act as bearings for the reverse gear shaft.

When the input shaft rotates, power is transmitted to the intermediate shaft continuously through the herring-bone gears A and B. Now, depending on the position of the forks 13 and 14 and the corresponding collars, different speeds are obtained. When the fork 13 is in neutral position and fork 14 is moved until the spur gear H engages with G, then, due to two step reduction of speed, the lower speed ratio 4:1 is obtained at the output shaft. To obtain the second gear, the fork 14 is moved to the left until the collar completes the meshing and engages with the dog teeth. This operation arrests the independent free rotation of gear F, by engaging the dog teeth with the toothed ring, and the output shaft through the sleeve which is splined on it. The gear E on the intermediate shaft transmits power to the output shaft through gear F which is the second gear with a ratio 2.4:1.

To obtain the third gear, the gears in mesh are A-B, and C-D with the collar consisting of sleeve 10 and toothed ring 9 engaged with dog teeth on gear D; the speed ratio being 1.4:1. When the toothed ring 9 engages with the dog teeth on gear wheel A, mounted on input shaft, the transmission is established directly to the output shaft; resulting in top speed ratio of 1:1.

www.EngineeringBooksPdf.com

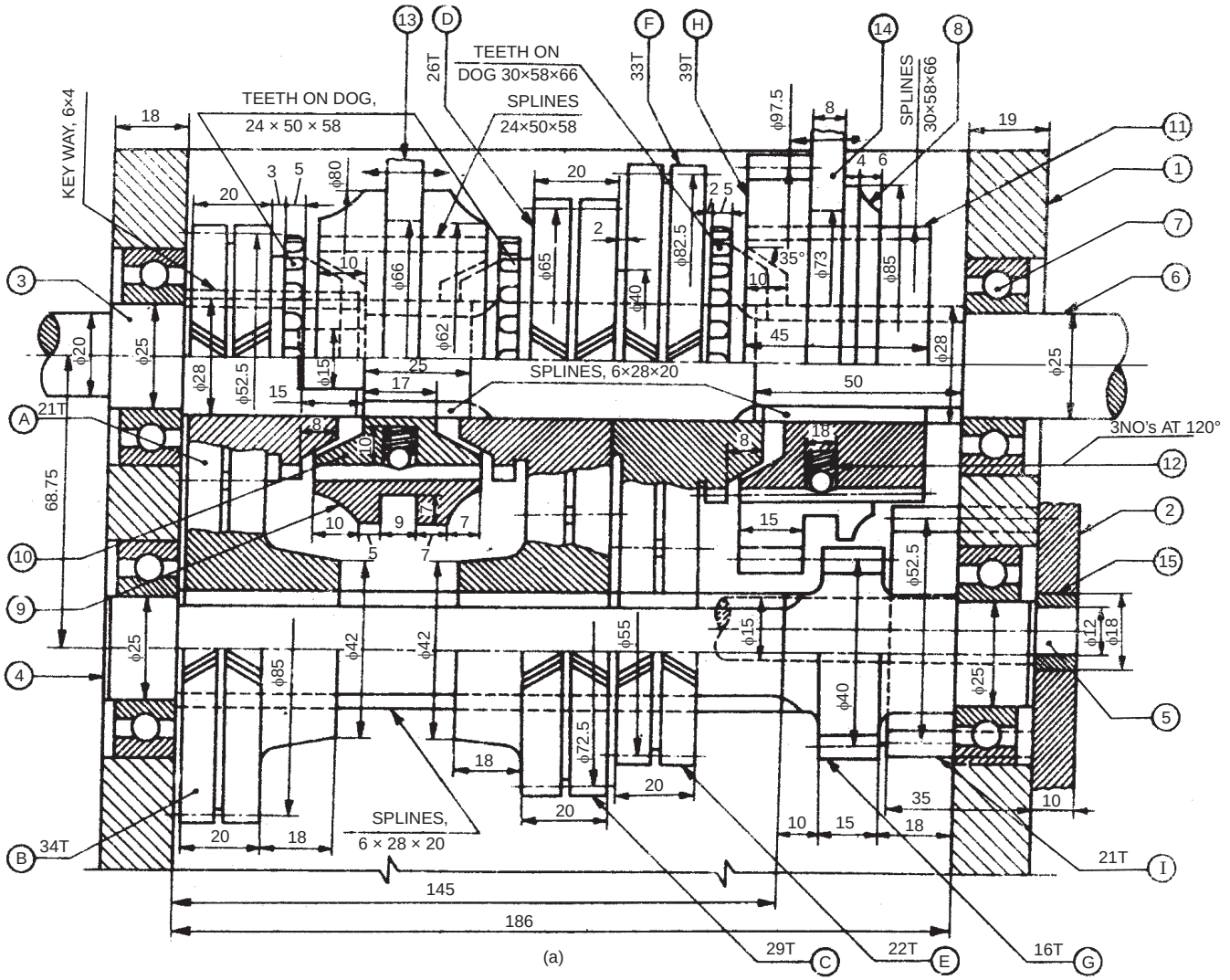

Fig. 19.6 Automobile gear box (*contd.*)

www.EngineeringBooksPdf.com

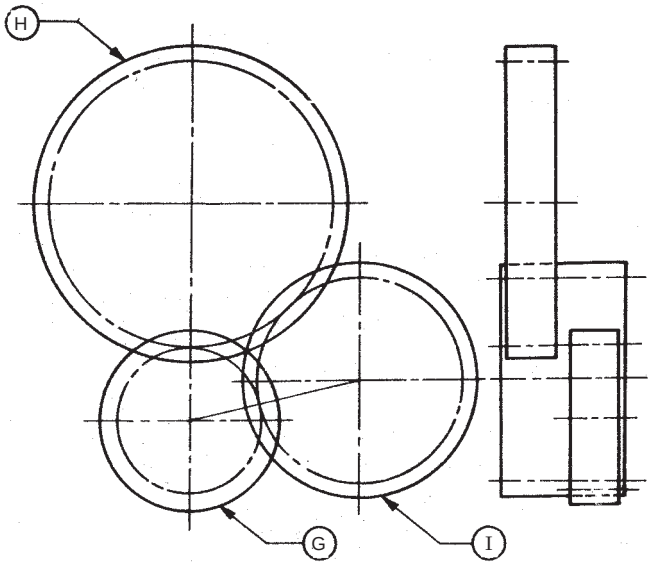

(b)

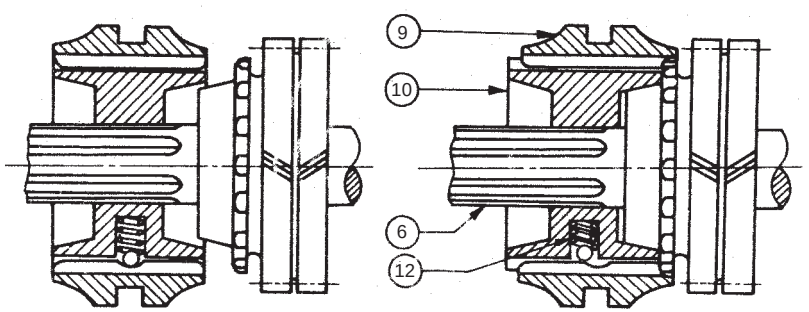

Spring loaded ball hold the collar together

Pressure on the gear lever causes toothed outer ring to slide into engagement

(c)

Parts List

Part No.	Name	Matl.	Qty.
1	Housing	Al alloy	1
2	Shaft support	Al alloy	1
3	Input shaft	MCS	1
4	Intermediate shaft	MCS	1
5	Reverse gear shaft	MCS	1
6	Output shaft	MCS	1
7	Ball bearing 6205	—	4
8	Toothed ring	MCS	1
9	Toothed ring	MCS	1
10	Sleeve	MCS	1
11	Sleeve	MCS	1
12	Spring loaded ball	—	6
13	Fork	Forged steel	1
14	Fork	Forged steel	1
15	Bush	Bronze	2
A, B, C, D, E, and F Herring bone gears		Forged steel	
H and I, Spur gears		Forged steel	
G, Spur gear		—	
All gears, module 2.5 mm			

Fig. 19.6 Automobile gear box

www.EngineeringBooksPdf.com

The reverse gear is obtained through the gears A-B, G-I and J-H. The gear I is of larger width mounted at the rear of the gear box and it acts as an idler to reverse the direction of the output shaft. The position of these gears is shown in Fig. 19.6 (*b*).

19.2.7 Split-sheave Eccentric

Figure 19.7 shows the assembly drawing of a split-sheave eccentric. In this, sheaves 1 and 2, forming a circular disc with a stepped rim is housed in two abutting straps 6 and 7. Two shims 8 are used in-between the straps for free movement of the sheave. When the shaft rotates, the sheave rotates eccentrically, imparting reciprocating motion to the eccentric rod. The eccentric rod is connected to one of the straps rigidly.

The straps are semi-circular elements, with an annular recess to accommodate the stepped rim of the sheave. The rotary motion of the sheave is converted into linear motion to the eccentric rod, through the straps. These are held together on the sheave by means of strap bolts, with packing strips placed between them. These permit adjustment for wear at a later date. The eccentric rod is connected to one of the straps by means of studs 11.

19.3 MACHINE TOOL PARTS AND ACCESSORIES

19.3.1 Tool Post

Tool posts of various designs are available to support the cutting tools in lathe machines. Figure 19.8 shows the assembly drawing of a single tool post which supports one cutting tool and is used on small size lathes. This unit is fixed on the compound rest of the lathe carriage.

The body of the tool post is in the form of a circular pillar 1 with a collar at one end and a threaded hole at the other end. A vertical slot is also provided to accommodate the tool or tool holder. The pillar is slid through a square block 5, which finally is located in the T-slot, provided in the compound rest. The design permits swivelling of the pillar about its vertical axis. A circular ring 4 is slid over the pillar and wedge 3 is located in the vertical slot of the pillar. The tool or tool holder is placed over the wedge. By sliding the wedge on the spherical surfaced ring, the tool tip can be finally adjusted and clamped in position by means of a square headed clamping screw 2, through the pillar head.

19.3.2 Lathe Slide Rest

This is used for holding and guiding the cutting tool on the lathe machine. It is fixed on the lathe carriage. The lathe slide rest has a circular base with a cylindrical projection underneath. It is fixed to the carriage by means of two bolts. The projection enables the slide rest to be fixed at any angle with respect to the axis of the work.

Figure 19.9 shows the assembly of a lathe slide rest. The upper face of the body 1 has channel shaped section and machined to act as guides for the slide block 2. The slide block has a T-slot on the upper side for accommodating the tool holder 3. The bottom of the slide block is machined to form a guide way on one side and takes a wearing strip 5 for the purpose of sliding.

www.EngineeringBooksPdf.com

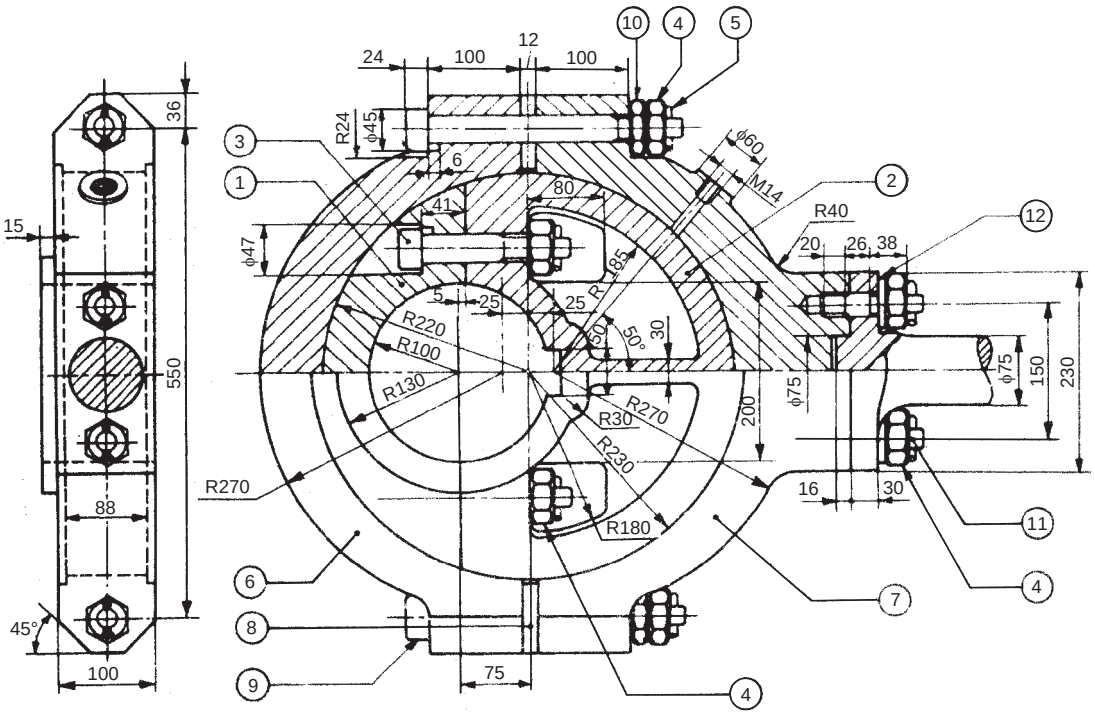

Parts list

Part No.	Name	Matl.	Qty.	Part No.	Name	Matl.	Qty.
1	Sheave piece	CS	1	7	Strap	Cl	1
2	Sheave piece	CS	1	8	Shim	Brass	2
3	Bolt M30 × 135	MS	2	9	Bolt M30 × 250	MS	2
4	Nut M30	MS	6	10	Lock nut M30	MS	2
5	Split pin ϕ6 × 50	MS	6	11	Stud M30	MS	2
6	Strap	Cl	1	12	Washer	MS	2

Fig. 19.7 Split-sheave eccentric

A circular hole is provided at the centre of the block for holding the cylindrical portion of the nut 4. An adjusting screw 8 passes through the nut and is held to the body by means of a bearing plate 6.

By operating the adjusting screw, the slide block is made to move along with the tool holder on the body. A cylindrical tool holder 3 is fitted in the T-slot provided on the slide block. A tool is fixed in the tool holder by means of a screw 9. A circular washer 7 is provided on the slide block which forms a bearing surface for the cutting tool.

www.EngineeringBooksPdf.com

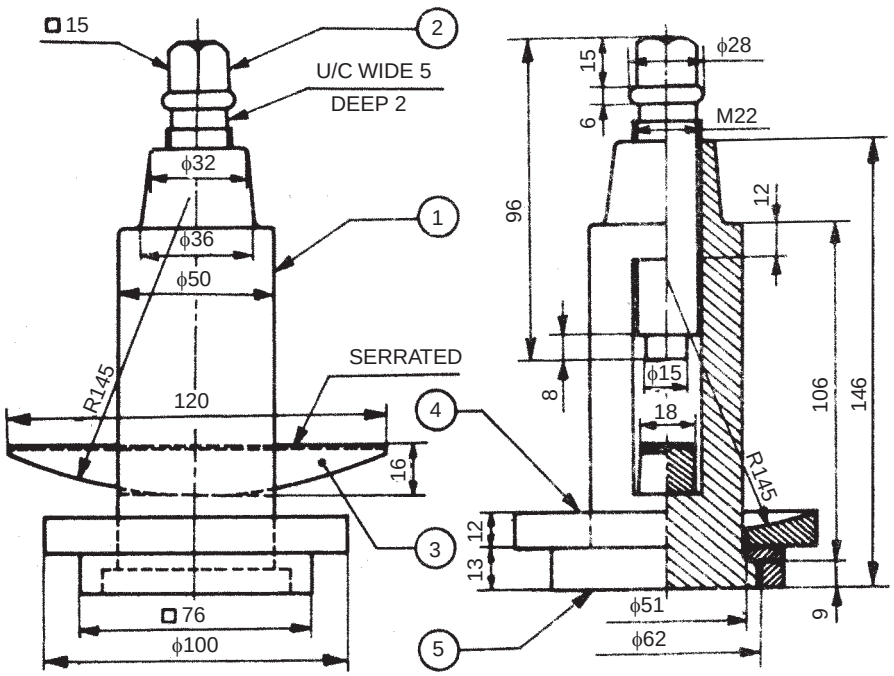

Parts list

Part No.	Name	Matl.	Qty.
1	Body	MS	1
2	Clamp screw	MCS	1
3	Wedge	CI	1
4	Ring	MS	1
5	Square block	MS	1

Fig. 19.8 Single tool post

19.3.3 Lathe Speed Gear Box

In a conventional engine lathe, different spindle speeds are obtained by means of belt driven cone pulley and back gear arrangement. The step cone pulley and the back gear are accommodated in the headstock of the engine lathe. This arrangement suffers from (*i*) slipping of the belt, (*ii*) change of speed, requiring change of belt position and (*iii*) lack of positive drive. To overcome these draw backs and to provide a positive drive, the belt drive is replaced by a gear drive. A lathe with speed gear box is known as an all geared lathe. The assembly drawing of an all geared lathe headstock is shown in Fig. 19.10(*a*). It may be noted that, for the purpose of clarity of the drive mechanism, the shafts are shown as if they are one below the other and in the same plane.

The drive shaft S2 is positioned in the head stock body 1 of the lathe and is driven by an electric motor through a belt drive, using a V-pulley 5. The headstock also contains an intermediate splined shaft S3, on which sliding gears are mounted. Further, spindle S4 is also positioned in the head stock on which work holding devices such as self centering chuck, etc., are attached. The spindle is mounted on the taper roller bearings 6 and 7, which resist both axial thrust as well as transverse or radial force coming on the spindle. The drive shaft and the intermediate shafts are mounted on the ball bearings 8, 9 and 10. These bearings are protected by means of the cover

www.EngineeringBooksPdf.com

plates 11, 12, 13, 14 and 15 which are held in position by the round headed machine screws 19 and 20. A live center 17 is mounted in the spindle by means of reduction sleeve 16.

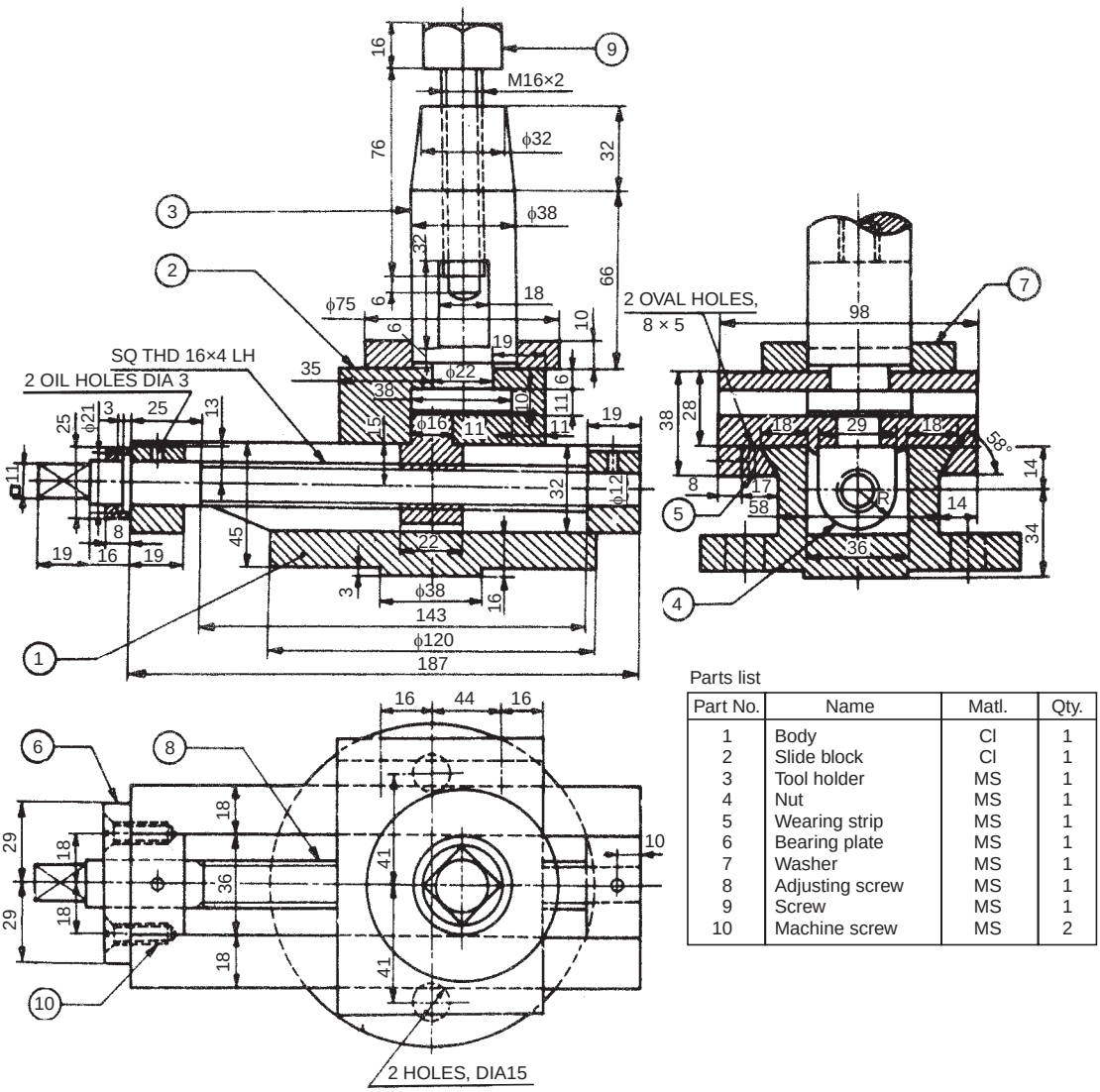

Parts list

Part No.	Name	Matl.	Qty.
1	Body	Cl	1
2	Slide block	Cl	1
3	Tool holder	MS	1
4	Nut	MS	1
5	Wearing strip	MS	1
6	Bearing plate	MS	1
7	Washer	MS	1
8	Adjusting screw	MS	1
9	Screw	MS	1
10	Machine screw	MS	2

Fig. 19.9 Lathe slide rest

The spur gears A, B and H are keyed on the drive shaft, whereas the gear G is an integral part of the shaft. A compound gear sleeve, consisting of gears D and E is mounted on the intermediate splined shaft to which are keyed the gears C and F. All the gears from A to H are of the same module, 2.5 mm. The compound gear I and J of module 3 mm are also mounted on the intermediate shaft. Compound gears K and L of module 3 mm are fixed to the spindle.

For obtaining different spindle speeds, the gear sleeve consisting of the gears C, D, E and F is moved on the spline shaft by lever X and the compound gears I and J by the lever Y. The following gear engagement provides 8 different speeds for the spindle:

www.EngineeringBooksPdf.com

1. A-C-I-K	5. A-C-J-L
2. B-D-I-K	6. B-D-J-L
3. G-E-I-K	7. G-E-J-L
4. H-F-I-K	8. H-F-J-L

For providing drive to the feed gear box from the spindle, gear M of module 2 mm is rigidly fixed to the spindle.

Figure 19.10(*b*) shows the isometric view of the headstock body and both the side views. The details of the bearing cover plates are indicated in the side views.

19.3.4. Milling Machine Tail Stock

Certain jobs requiring milling operations, in relation to their axes of rotation, are usually supported between centers. An assembly drawing of a milling machine tail-stock is shown in Fig. 19.11. The job is held between the centre in the dividing head and adjustable center provided in the tail-stock. This is similar to the lathe tail-stock.

To fix the work between centers, the dividing head spindle is first brought to a horizontal position. Then, one end of the work is supported in the work center of the dividing head spindle, with the help of a mill-dog. The tail-stock position is then adjusted to suit the length of the work and it is then clamped to the table of the machine, in that position. After clamping of the tail-stock, fine adjustment can be made by rotating the knurled hand wheel 3. The knurled hand wheel is attached to the center by the screw 4, washer 6 and nut 7. This will allow tail-stock center 2 to slide horizontally in its guide. After setting correctly, the center is clamped by means of screw 5.

Unlike the lathe tail-stock, there is no relative motion between the center and the work piece in the milling machine tail-stock; hence the center may be made of mild steel.

19.3.5 Lathe Travelling Rest

It is an attachment to a lathe machine for supporting long slender work pieces against the cutting tool forces. Figure 19.12 shows an assembly drawing of a lathe travelling rest. The design permits it to be clamped to the carriage of the lathe, enabling it to travel along with the cutting tool. The two jaws 2 are positioned slightly behind the cutting tool, so that the bearing is taken on the round portion of the job, which has been just finished. The two supporting jaws of the rest, resist the cutting forces. Jaws may be adjusted by the hexagonal headed screws 3 and clamped in position in the main body 1 by means of set-screws 4. A flat surface is provided on the jaws, for effective clamping. A guide strip 5 is used for the proper adjustment of the travelling rest on the guide ways of the carriage. To reduce the damage to the finished surface of the job, the jaws are normally made of brass.

19.3.6. Self-centering Vice

Figure 19.13 shows the assembly drawing of a self-centering vice. This is used as a quick acting fixture for locating and holding circular shafts and work pieces for cutting keyways, grooves, slots, etc. The vice consists of a CI body 1 into which a V-block 4 may be fitted tightly. Based on the size of the workpiece, the size of the V-block is chosen. Two CI jaws 2 are fitted to the body with the help of pins and the pins provide swivelling action to the jaws, to clamp the workpiece onto the V-block.

Two cylindrical nuts 7 and 8 are located on the other ends of the jaws. A right hand screw 5 engages the nut 7 and the screw has a collar at the other end. A left hand screw 6 is fitted in the collar and engages the nut 8. The handle 9 is fixed to the other end of the screw 6 by means of the taper pin.

www.EngineeringBooksPdf.com

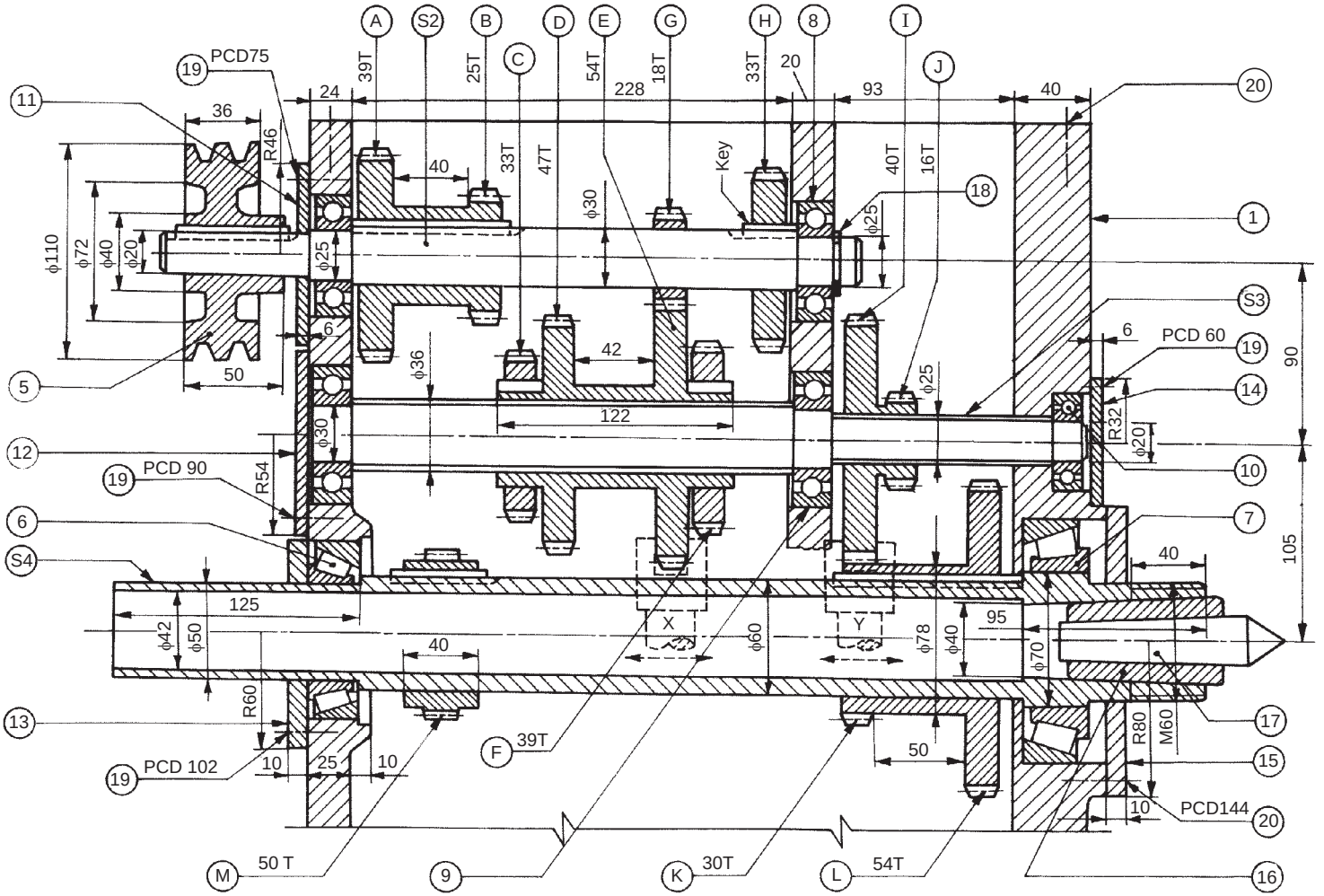

Fig. 19.10(a) Lathe speed gear box

www.EngineeringBooksPdf.com

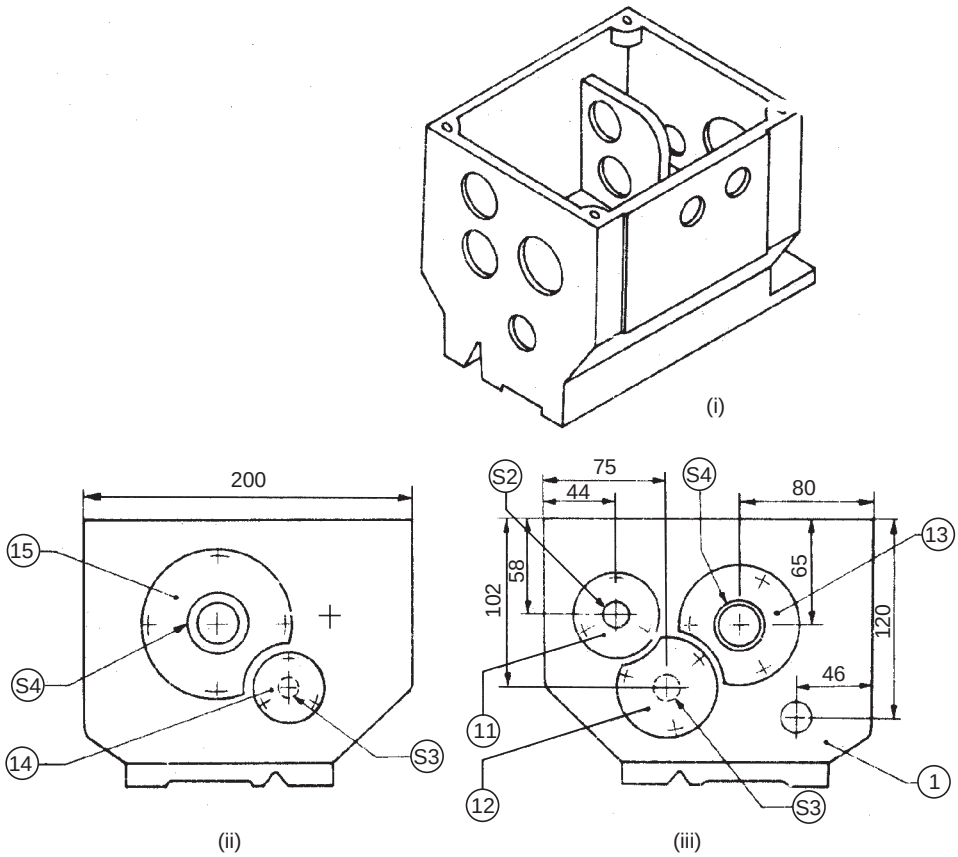

Parts list

Part No.	Name	Matl.	Qty.	Part No.	Name	Matl.	Qty.
1	Body	Cl	1	13	Cover plate	Cl	1
S2	Drive shaft	MS	1	14	Cover plate	Cl	1
S3	Intermediate shaft	MS	1	15	Cover plate	Cl	1
S4	Spindle	MCS	1	16	Reduction sleeve	MCS	1
5	Pulley	Cl	1	17	Live centre	HCS	1
6	Taper roller bearing (32211)		1	18	Circlip		1
7	Taper roller bearing (32214)		1	19	Round HD SCR M5×15	MS	12
8	Ball bearing 6005		2	20	Round HD SCR M5×20	MS	4
9	Ball bearing 6006		2		A to H spur gears module 2.5	MCS	8
10	Ball bearing 6004		1		I to L spur gears module 3	MCS	4
11	Cover plate	Cl	1		M spur gear module 2	MCS	1
12	Cover plate	Cl	1				

Fig. 19.10 (b) Lathe speed gear box casing—(i) Isometric view, (ii) View from the right, (iii) View from the left.

www.EngineeringBooksPdf.com

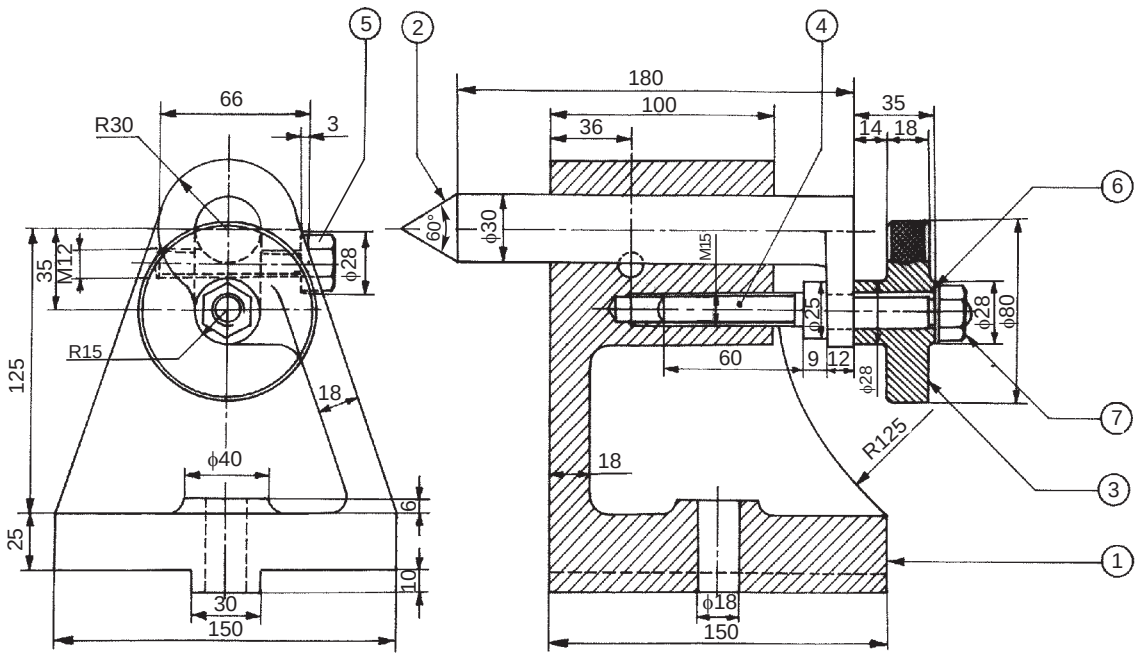

Parts list

Part No.	Name	Matl.	Qty.
1	Body	CI	1
2	Centre	Case hardened alloy steel	1
3	Hand wheel	Cast steel	1
4	Screw	MS	1
5	Screw	MS	1
6	Washer	MS	1
7	Nut	MS	1

Fig. 19.11 Milling machine tail-stock

www.EngineeringBooksPdf.com

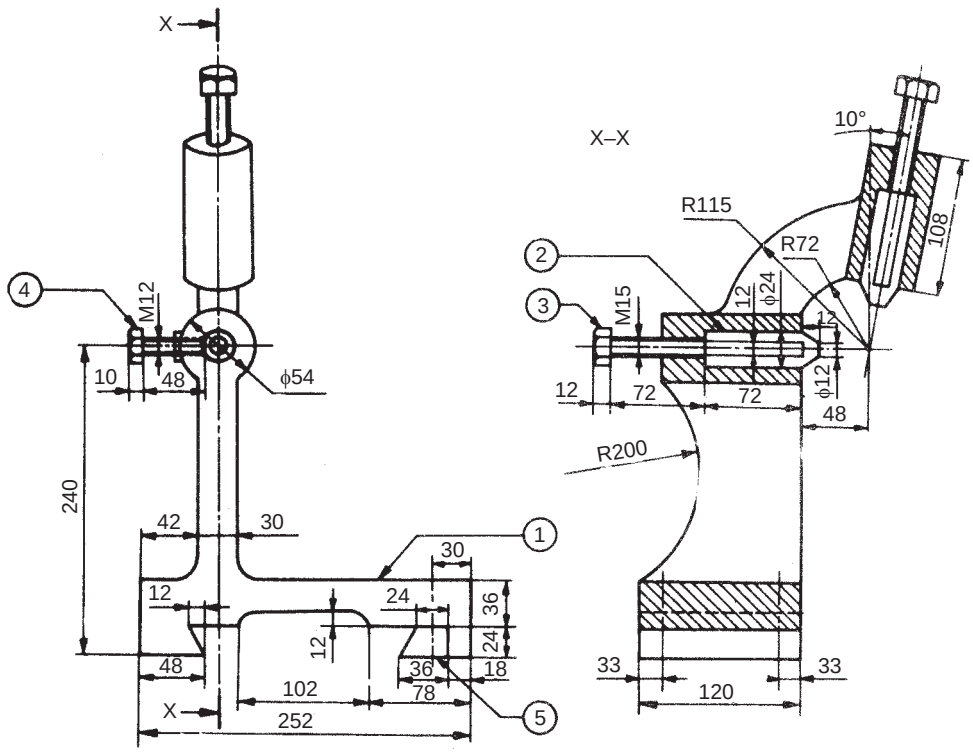

Parts list

Part No.	Name	Matl.	Qty.
1	Body	CI	1
2	Jaw	Brass	2
3	Screw	MCS	2
4	Screw	MCS	2
5	Guide strip	MS	1

Fig. 19.12 Lathe travelling rest

www.EngineeringBooksPdf.com

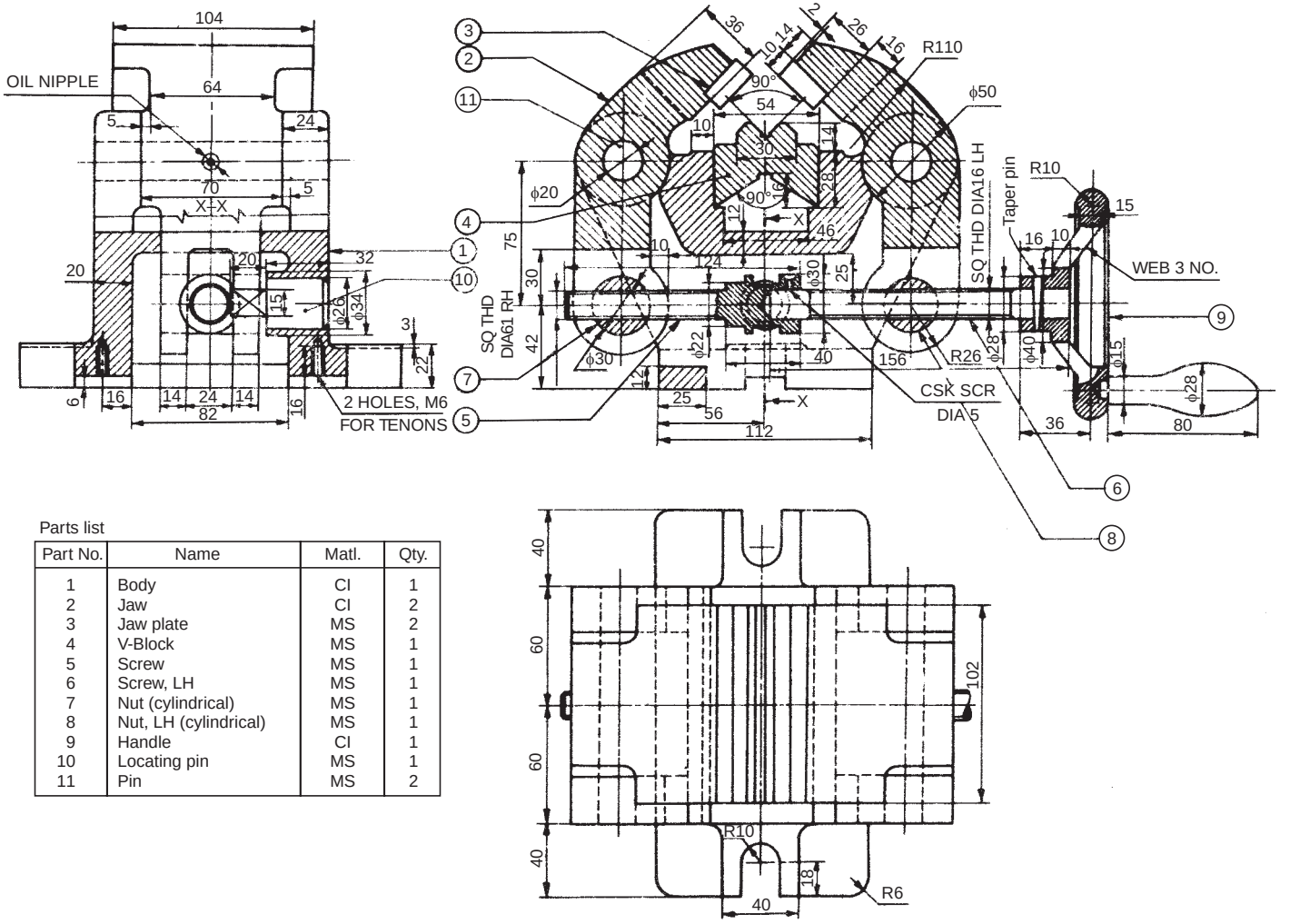

Parts list

Part No.	Name	Matl.	Qty.
1	Body	CI	1
2	Jaw	CI	2
3	Jaw plate	MS	2
4	V-Block	MS	1
5	Screw	MS	1
6	Screw, LH	MS	1
7	Nut (cylindrical)	MS	1
8	Nut, LH (cylindrical)	MS	1
9	Handle	CI	1
10	Locating pin	MS	1
11	Pin	MS	2

Fig. 19.13 Self-centering vice

www.EngineeringBooksPdf.com

When the handle is operated, the two jaws are moved towards or away from the V-block, by turn-buckle principle. However, to ensure positive movement of the jaws, the translatory movement of the screws 5 and 6 is arrested by means of locating pin 10; the square head of which fits into the corresponding groove in the collar of the screw. Two tenons (not shown) are fitted to the base of the body to ensure proper alignment of the vice axis with respect to the machine spindle axis.

19.3.7 Milling Fixture

Figure 19.14 shows a simple milling fixture. The fixture is located on the machine table by two tenons 7 and clamped to the machine table in the T-slots. The workpiece is located using the full diameter locating pin 8 and flattened locating pin 4. The job is clamped by two heavy duty clamps 2 to the fixture base.

The cutter setting is obtained by using the setting block 3, for both depth and transverse setting. The setting block is fixed by means of locating pins 9 and dowel pins 10. The clamps are positioned by guide pin 11 and rigidly fixed by clamping screws 5 and clamping nuts 6.

19.3.8 Indexing Drill Jig

Drill jigs are used when it is necessary to move the workpiece, relative to the machine spindle, between machining operations. The workpiece is located and clamped to a movable member, which can be indexed to the required position, relative to the drill bush and then locked while each feature is machined.

Figure 19.15 shows a simple indexing drill jig to produce four radial holes in the workpiece. The jig body 1 is equipped with an indexing lever 3 for locking the job in the required position. The rotating pin 5 and the indexing plate are located and clamped to the jig body, by means of a locking screw 4. The jig body is also provided with bush plate 2, which accommodates drill bush 7, for guiding the drill bit. For quick loading and unloading the job in the jig, C-washer 8 and clamp 6 are used. Locating pin 9 and dowel pins 10 are used for proper location and fixing of bush plate in the jig body.

After locking the rotating pin by the indexing lever and the locking screw, a radial hole is drilled. The job is indexed to the next position by loosening the locking screw and disengaging the indexing lever. The rotating pin (with index plate and job) is indexed to the next position and locked. The procedure is repeated till all the four radial holes are drilled. The spring is held in position, by the spring retainer 10.

19.3.9 Pierce and Blank Tool

The pierce and blank tool illustrated in Fig. 19.16, used for the production of washers, is a follow-on type. It consists of a cover plate 3, which is located relative to the base 1 by means of guide pins 8 and guide block 7. The punch 5 and the blanking tool 6 are located in the tool holder 4 which is finally held by the cover plate.

The die block 2 is fixed to the base, relative to the tool holder and tools. The hole in the feed stock is pierced by the punch first and then the feed stock is positioned under the blanking tool which shears the washer. One washer is completed at each stroke of the press. The hole left by the blanking operation is used to position the stock against the spring loaded stop 9.

19.4 MISCELLANEOUS PARTS

19.4.1 Blow-off Cock

This is used to remove sediments collected at the bottom of a boiler. When operated, water rushes out from the boiler (being under pressure) carrying the sediments along with it. The blow-off cock is fitted at the lowest part of the boiler, where the sediments are expected to collect. The side

www.EngineeringBooksPdf.com

flange of the cock is fitted to the boiler shell, whereas the bottom flange is fitted to the pipe, carrying the water and sediments. The assembly drawing of a blow-off cock is shown in Fig. 19.17.

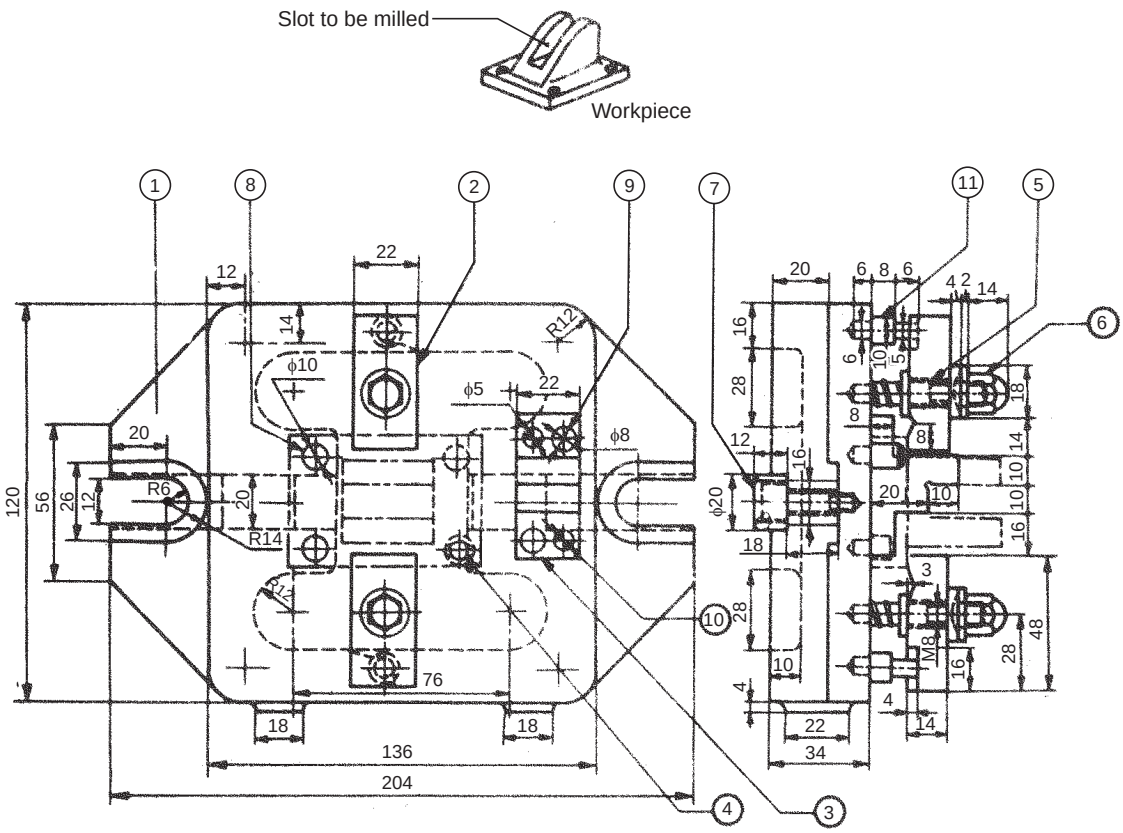

Parts list

Part No.	Name	Matl.	Qty.	Part No.	Name	Matl.	Qty.
1	Fixture base	CI	1	7	Tenon	HCS	2
2	Clamp	MS	2	8	Locating pin	HCS	2
3	Setting block	MS	1	9	Locating pin	HCS	2
4	Flattened location pin	HCS	1	10	Dowel pin	HCS	2
5	Clamping screw with spring	MS	2	11	Guide pin	HCS	2
6	Clamping nut	MS	2				

Fig. 19.14 Milling fixture

The blow-off cock comprises a hollow conical cock 2 fitting into the corresponding hole in the body 1. Both the cock and the body have vertical slots and when the slot in the cock is brought in line with the slot in the body, water flows out of the boiler. By turning the cock through 90°, the passage may be closed. To prevent leakage of water, gland 3 is tightened to the body. A keyway is provided in the gland cover to make sure that the cock is closed before the handle is removed.

www.EngineeringBooksPdf.com

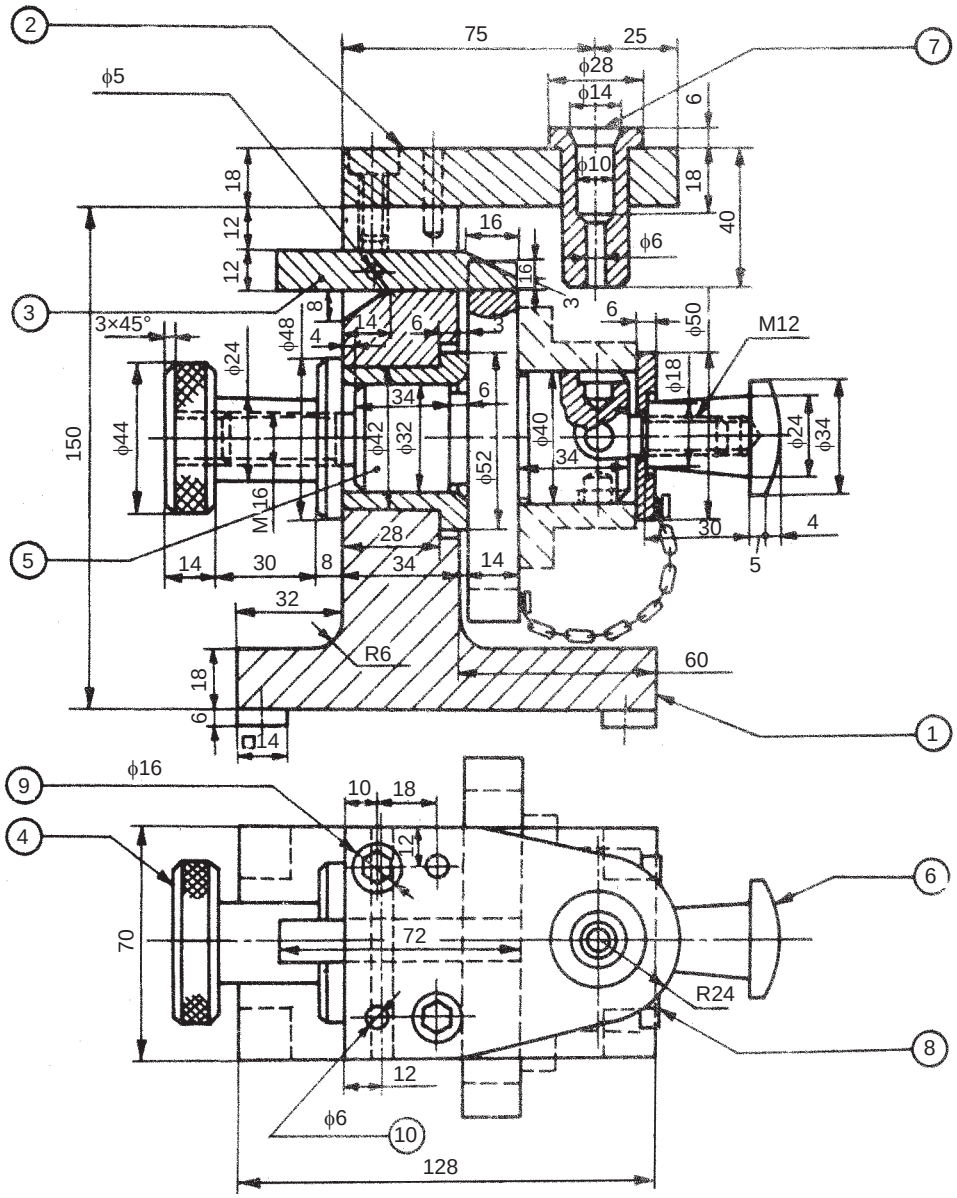

Parts list

Part No.	Name	Matl.	Qty.	Part No.	Name	Matl.	Qty.
1	Jig body	CI	1	6	Clamp	CI	1
2	Bush plate	CI	1	7	Drill bush	HCS	1
3	Indexing lever	MS	1	8	C washer	MS	1
4	Locking screw	MS	1	9	Locating pin	HCS	2
5	Rotating pin	MS	1	10	Dowel pin	HCS	2

Fig. 19.15 Indexing drill jig

www.EngineeringBooksPdf.com

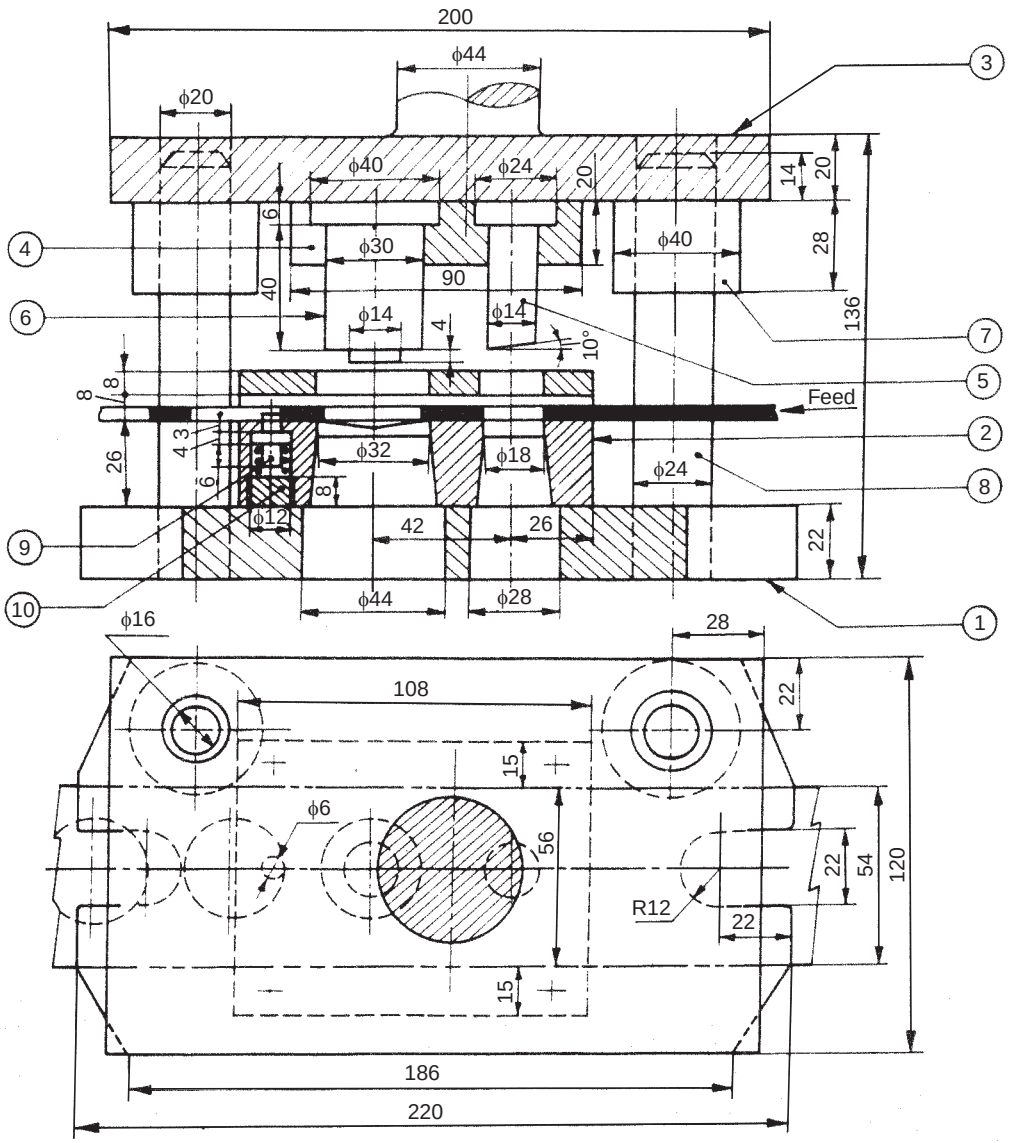

Parts list

Part No.	Name	Matl.	Qty.	Part No.	Name	Matl.	Qty.
1	Base	MS	1	6	Blanking tool	Tool steel	1
2	Die block	Tool steel	1	7	Guide block	MS	2
3	Cover plate	MS	1	8	Guide pin	MS	2
4	Tool holder	MS	1	9	Stop	HCS	1
5	Punch	Tool steel	1	10	Spring retainer	MS	1

Fig. 19.16 Pierce and blank tool

www.EngineeringBooksPdf.com

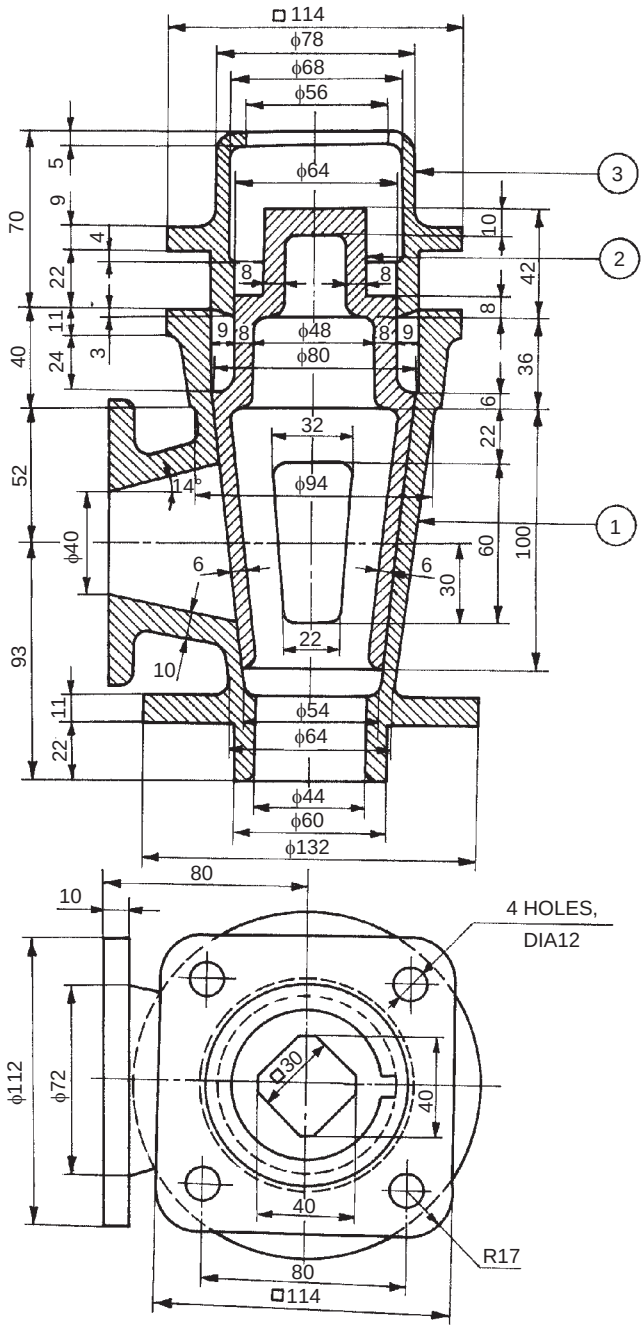

Parts list

Part No.	Name	Matl.	Qty.
1	Body	CS	1
2	Cock	GM	1
3	Gland	CS	1

Fig. 19.17 Blow-off cock

www.EngineeringBooksPdf.com

19.4.2 Steam Stop Valve

The function of a steam stop valve is to regulate the amount of steam passing through the steam pipe. It is operated manually.

Figure 19.18 shows one design of a steam stop valve. The valve seat 7 is screwed into the valve body 1. The valve 6 is attached to the spindle 8 by a collar 9 and a pin. The cover 2 is attached to the body along with the stuffing box, by studs and nuts 11. A bridge 5 is attached to the cover, by means of two studs with collars 12. The spindle is screwed into the bridge and a hand wheel is kept in position at the end of the spindle by a nut 13. When the hand wheel is operated, the valve moves perpendicular to the seat and allows the steam to pass from the left to the right side of the valve.

19.4.3 Ramsbottom Safety Valve

In Ramsbottom safety valve, spring load is used to lift the valves, when excess pressure of steam is built-up. It is mostly used in a locomotive boiler. Whenever steam pressure exceeds the designed value of the spring force, the excess pressure lifts the valves, allowing steam to escape till the pressure decreases to the permissible value.

Figure 19.19 shows the assembly drawing of a Ramsbottom safety valve. It consists of two valve chests provided in cast iron housing 1. There are two valves 2 of the same size and shape, which are held in position against their seats 3 by the pivots of lever 5. The lever is loaded by means of spring 6, placed centrally between the chests. One of the pivots 4 is pinned to the lever, whereas the other is forged integral with the lever itself.

19.4.4 Diaphragm Regulator

Figure 19.20 shows the assembly drawing of a diaphragm regulator. This is used on gas lines to regulate the outlet pressure of the gas. The gas enters the regulator at A and leaves from B. The line pressure of a gas is indicated by the pressure gauge (not shown in figure) provided at C. Similarly, the outlet pressure is shown by the guage to be provided at D.

When the gas is let into the regulator, it forces the diaphragm assembly, to find its passage through B. For obtaining the required pressure of the gas at the outlet of the regulator, load on the spring 4 is adjusted. The spring is located on the screw 6, by means of a locator 5 and connected to the diaphragm assembly 2, by screwing the cover 3 onto the body 1. The required adjustment is thus obtained by operating the screw 6, observing the outlet pressure guage located at D.

19.4.5 Angle Plummer Block

Plummer blocks, when they are solid, are used mainly for end supports for the shafts and cannot be used as intermediate supports, because of the interference of the other shaft mountings, such as gears and pulleys. The split type of plummer block, whether the plane of splitting is horizontal or inclined, is more flexible in its use and may be used as intermediate shaft support or even as end support.

The angle plummer block shown in Fig. 19.21, consists of a cast iron pedastal or base with inclined surface at 30° to the vertical. It also consists of a cast iron cover 2, which is used for adjustment of wear in the brasses 3 and for the renewal of the brasses. This also facilitates easy installation of the bearing. The brasses are supported in the base and they are prevented from rotation by a snug provided in the bottom brass. The brasses are also prevented from moving axially, by the collars provided at the ends. The cover is bolted to the base by means of two studs 4 and nuts 5. For reducing the friction between the brasses and the shaft, lubricating oil is applied through the bush 6.

www.EngineeringBooksPdf.com

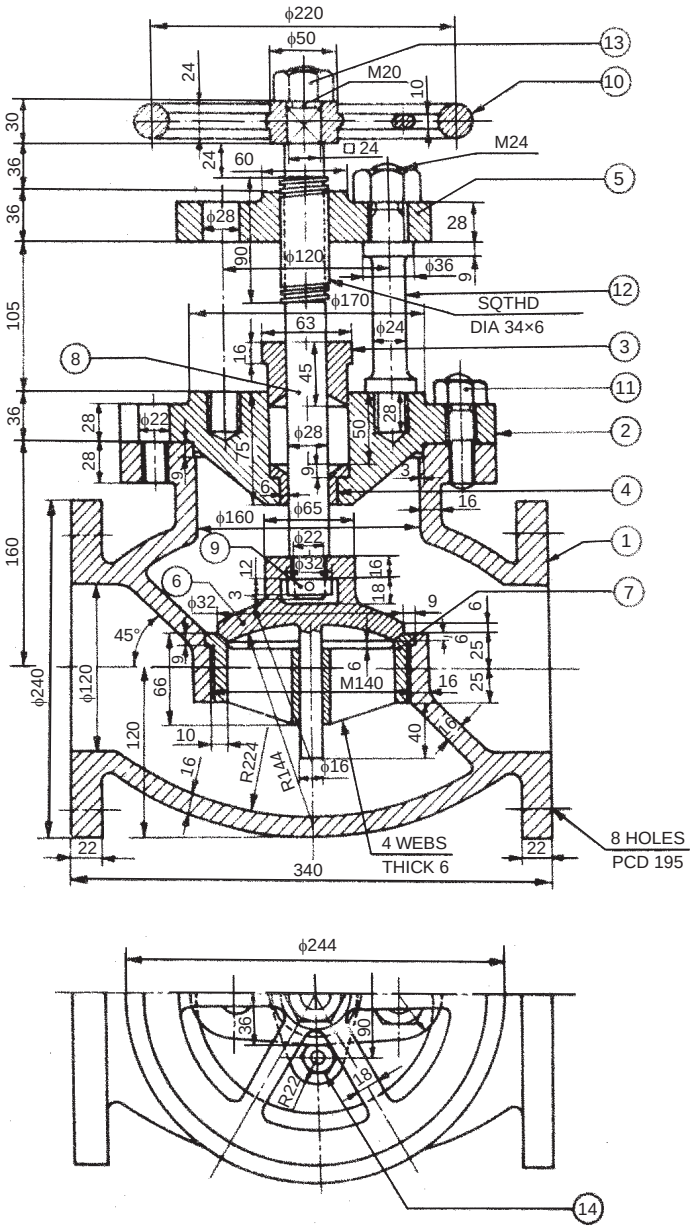

Parts list

Part No.	Name	Matl.	Qty.	Part No.	Name	Matl.	Qty.
1	Body	CI	1	8	Spindle	GM	1
2	Cover	CI	1	9	Collar	GM	1
3	Gland	GM	1	10	Hand wheel	CI	1
4	Neck bush	GM	1	11	Stud with nut	MS	6
5	Bridge	MS	1	12	Stud with collar	MS	2
6	Valve	GM	1	13	Nut	MS	1
7	Valve seat	GM	1	14	Stud with nut	MS	2

Fig. 19.18 Steam stop valve

www.EngineeringBooksPdf.com

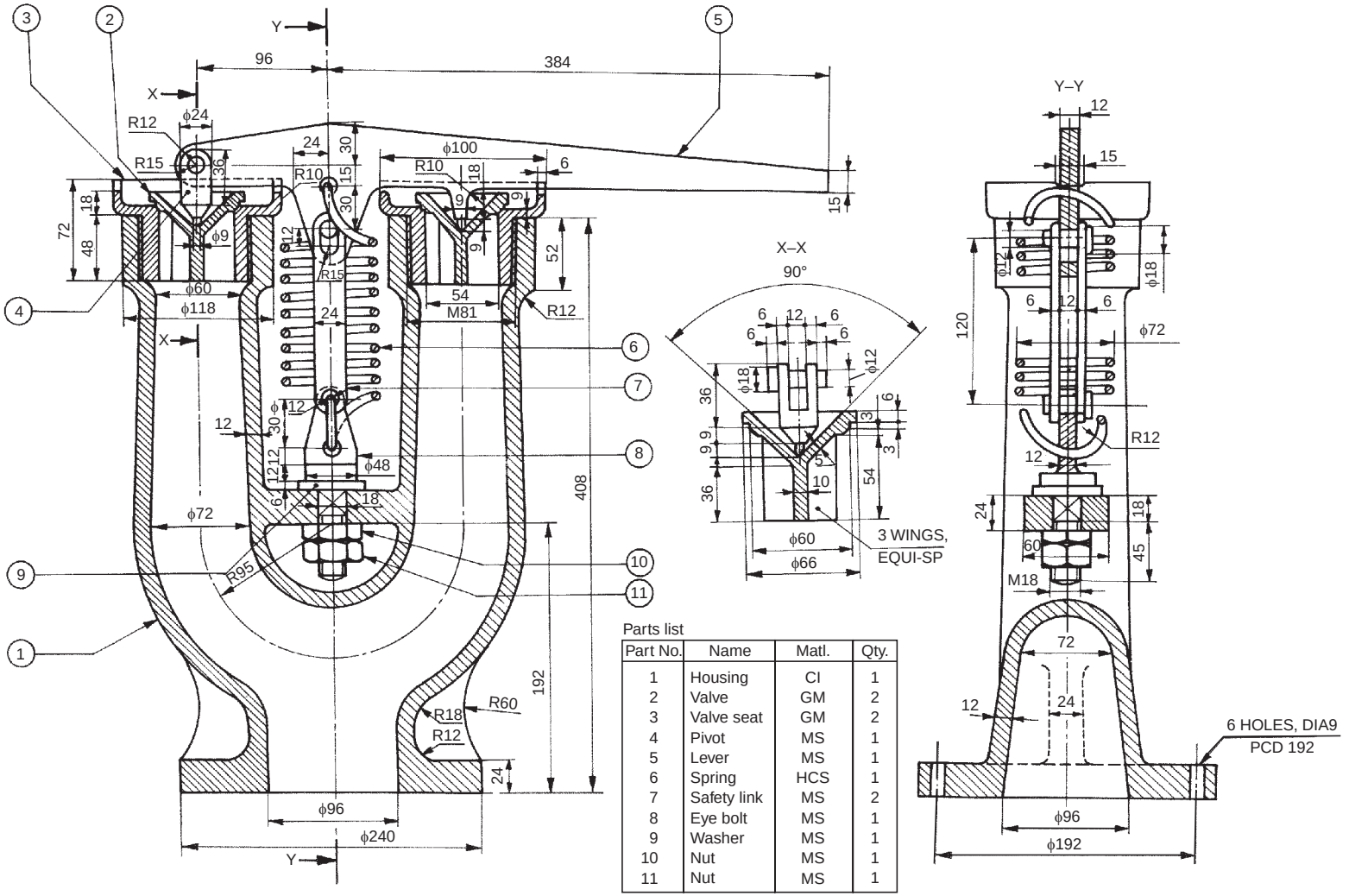

Parts list

Part No.	Name	Matl.	Qty.
1	Housing	CI	1
2	Valve	GM	2
3	Valve seat	GM	2
4	Pivot	MS	1
5	Lever	MS	1
6	Spring	HCS	1
7	Safety link	MS	2
8	Eye bolt	MS	1
9	Washer	MS	1
10	Nut	MS	1
11	Nut	MS	1

Fig. 19.19 Ramsbottom safety valve

www.EngineeringBooksPdf.com

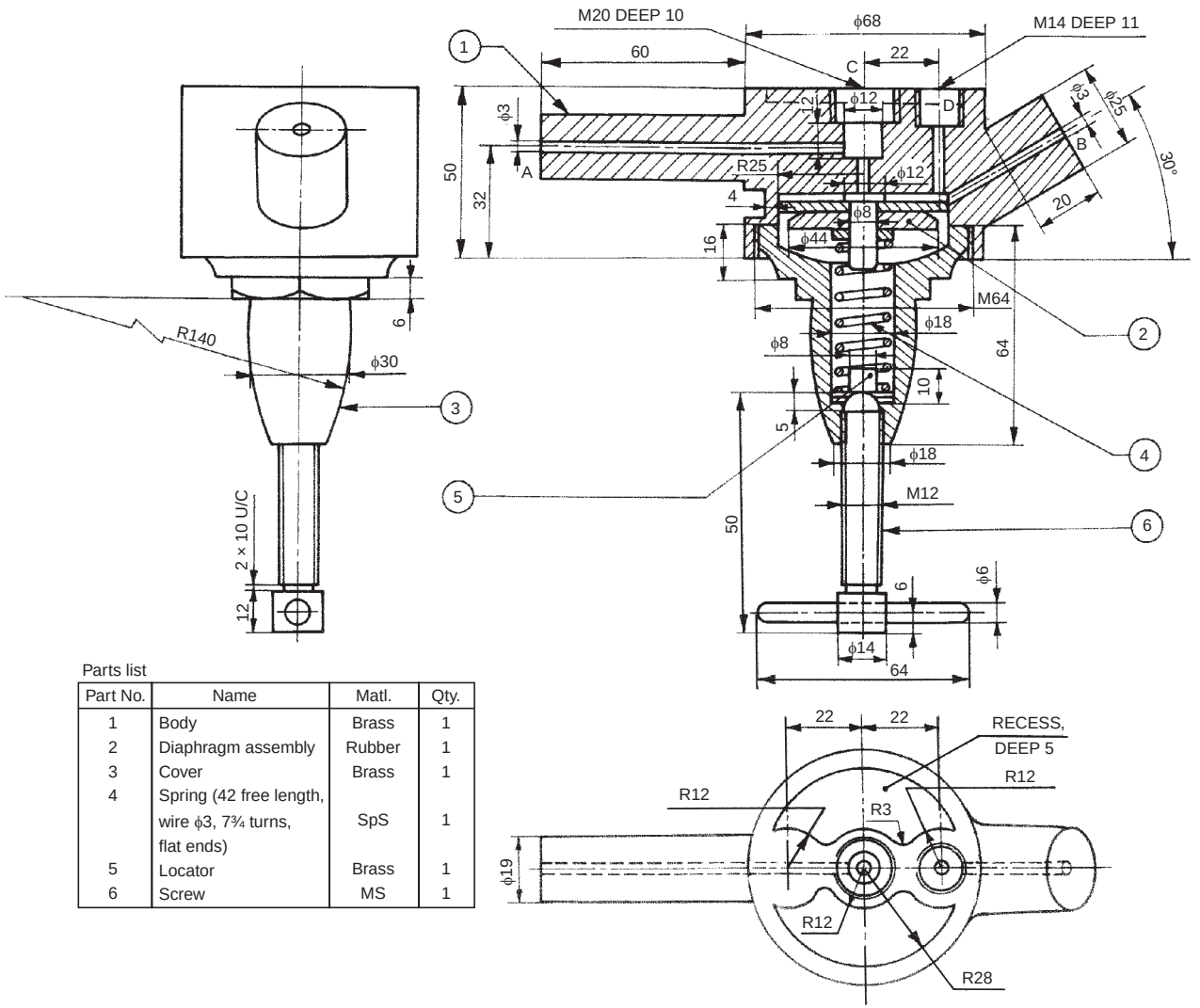

Parts list

Part No.	Name	Matl.	Qty.
1	Body	Brass	1
2	Diaphragm assembly	Rubber	1
3	Cover	Brass	1
4	Spring (42 free length, wire ϕ3, 7¾ turns, flat ends)	SpS	1
5	Locator	Brass	1
6	Screw	MS	1

Fig. 19.20 Diaphragm regulator

www.EngineeringBooksPdf.com

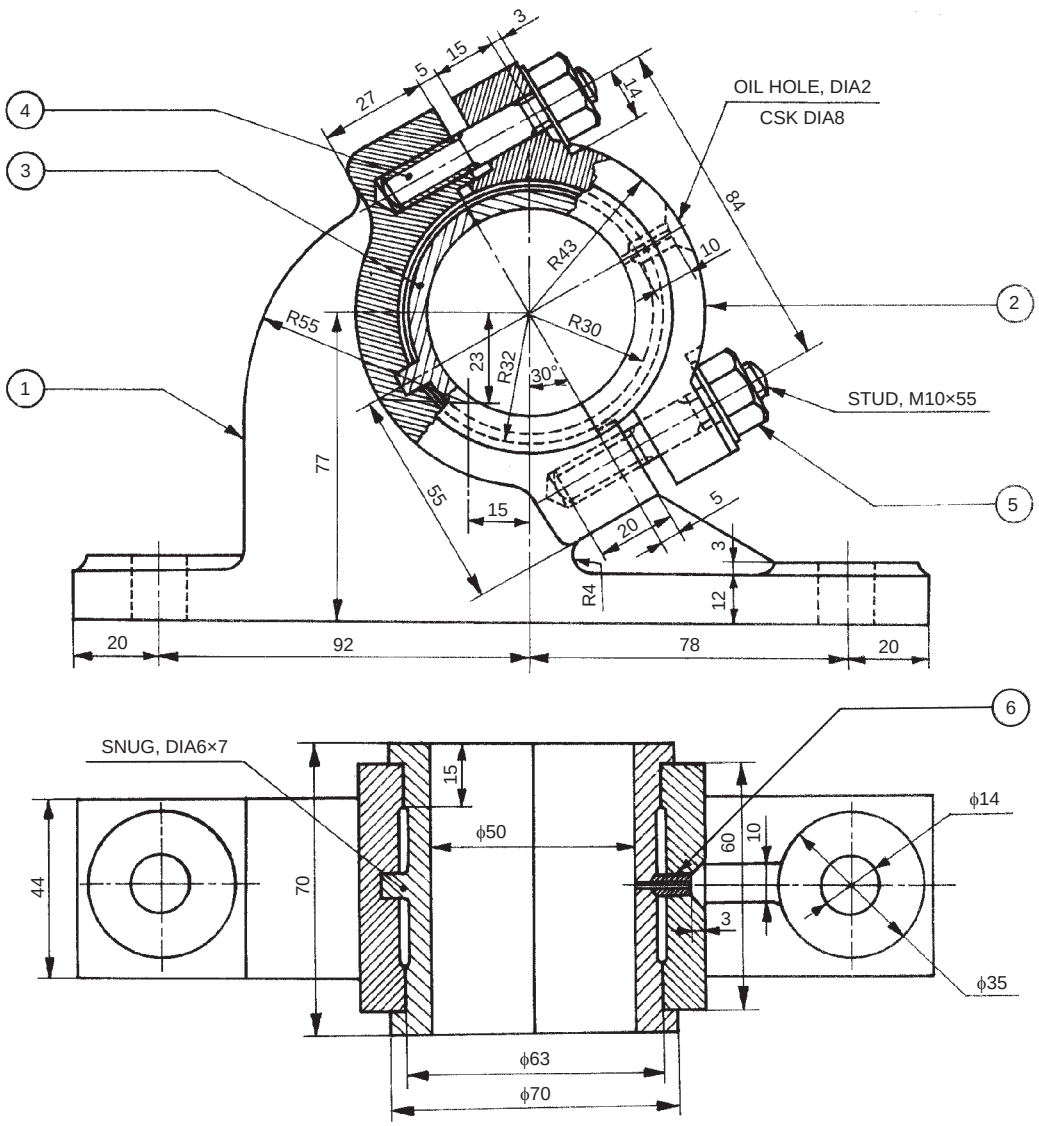

Parts list

Part No.	Name	Matl.	Qty.
1	Base	CI	1
2	Cover	CI	1
3	Brasses	GM	2
4	Stud	MS	2
5	Nut with washer	MS	2
6	Bush	GM	1

Fig. 19.21 Angle plummer block

www.EngineeringBooksPdf.com

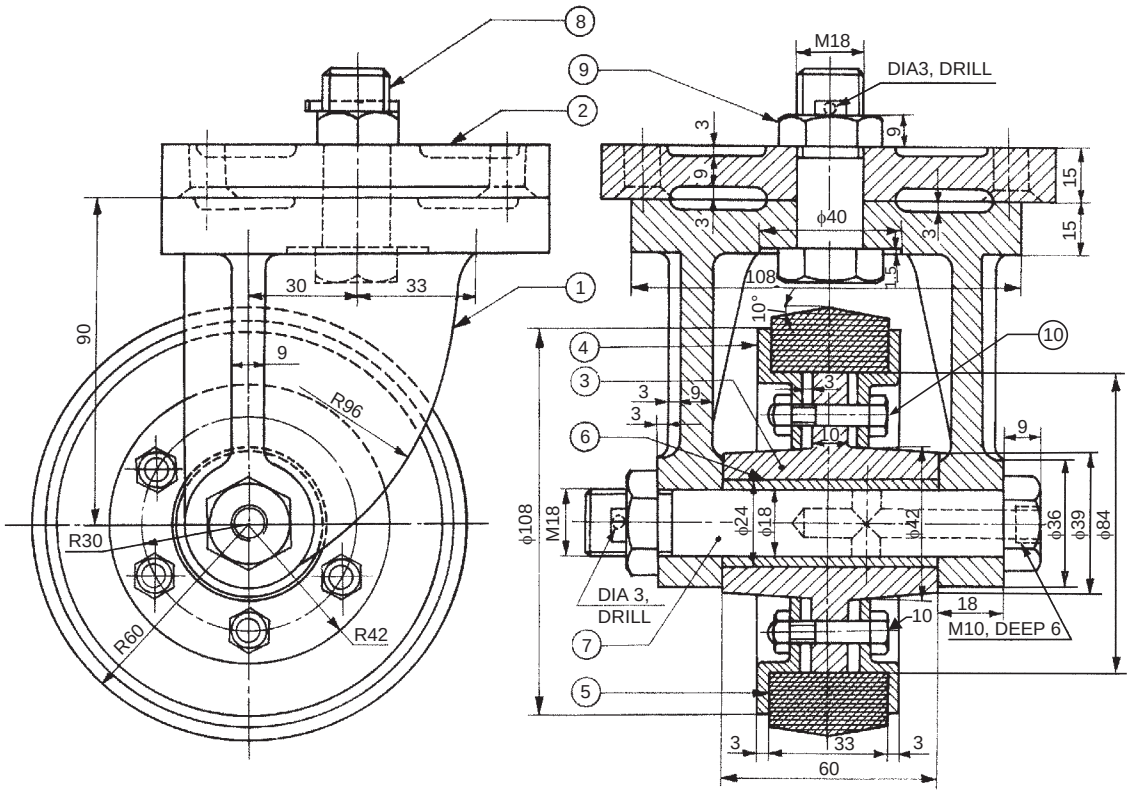

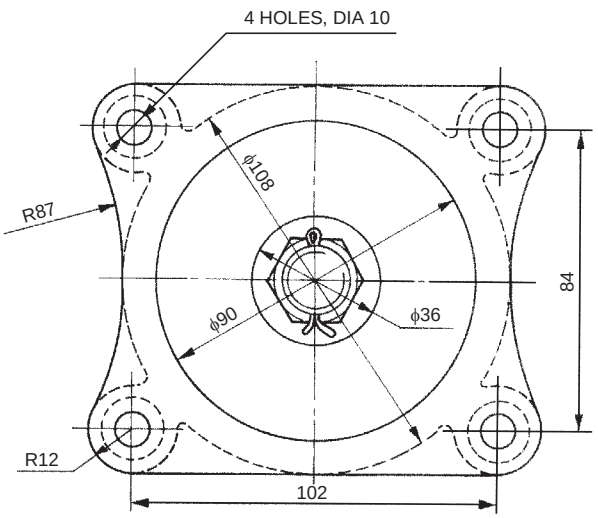

Parts list

Part No.	Name	Matl.	Qty.
1	Frame	CI	1
2	Plate	CI	1
3	Hub	CI	1
4	Flange	Strip steel	2
5	Tyre	Rubber	1
6	Bush	Brass	1
7	Shaft	CRS	1
8	King-pin	CRS	1
9	Nut	MS	2
10	Bolt with nut	MS	6

Fig. 19.22 Castor wheel

www.EngineeringBooksPdf.com

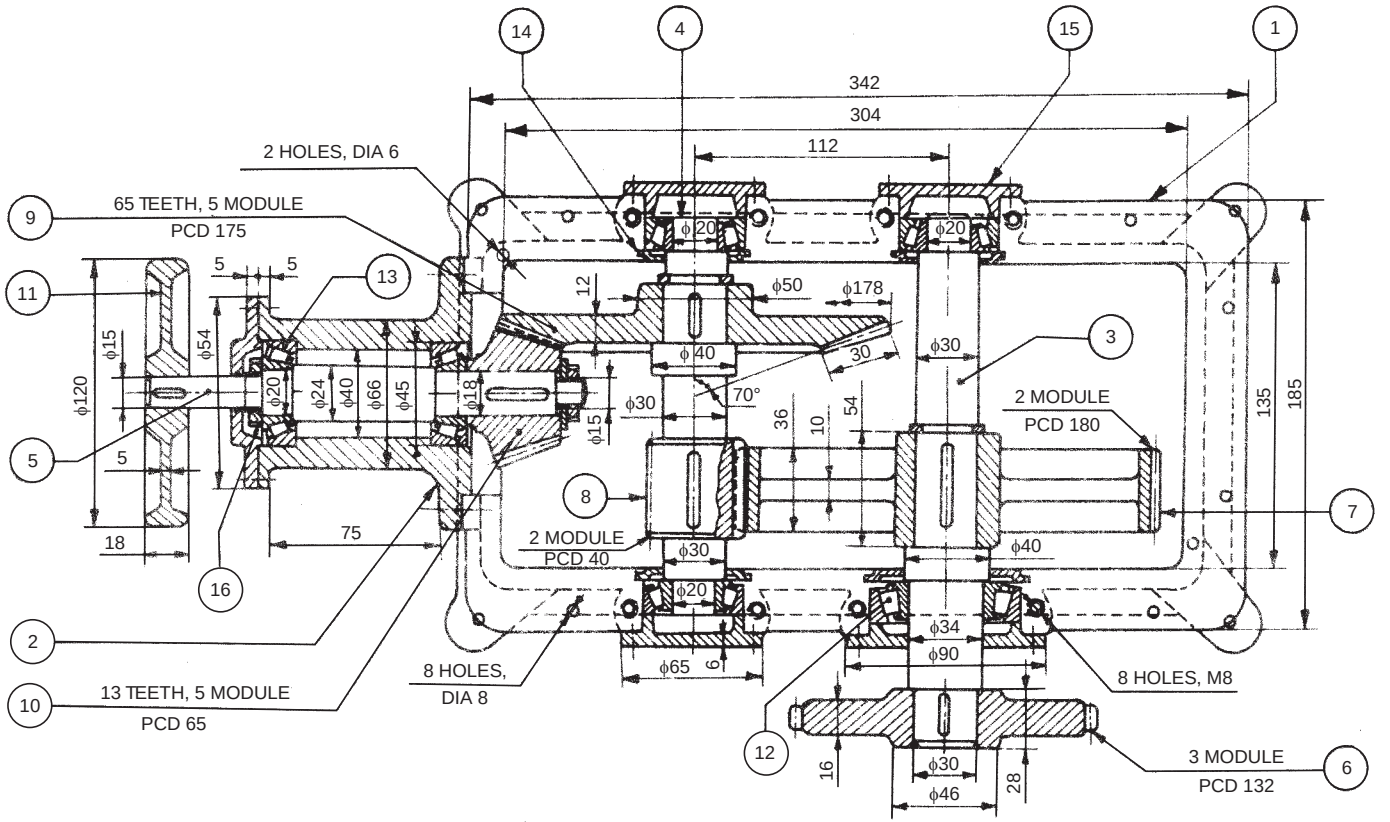

Parts list

Sl. No.	Name	Matl.	Qty.	Sl. No.	Name	Matl.	Qty.
1	Body	CI	1	11	Pulley	MS	1
2	End support	CI	1	12, 13	Bearings		6
3–5	Shafts	MCS	3	14	Oil seals	Rubber	4
6–8	Spur gears	MCS	3	15	Bearing covers	CI	5
9, 10	Bevel gears	MCS	2	16	Bearing retainer	—	1

Fig. 19.23 Speed reducer

www.EngineeringBooksPdf.com

19.4.6 Castor Wheel

Castor wheels are used on trolleys for moving them in any direction with minimum effort. A castor assembly is shown in Fig. 19.22. It consists of a frame 1 made of cast iron. The frame is freely suspended from the plate 2 by king-pin 8 and nut 9. The assembly is kept intact by a split-pin. The brass bush 6 is pressed into the hub 3. The rubber tyre 5 is placed on the hub and kept in position by the two flanges 4 which are clamped by bolts 10. This wheel assembly is located in the frame by the shaft 7. The shaft is positioned with a nut and a split-pin. A grease nipple is fixed on the head of the shaft, to provide lubrication between the shaft and bush bearing.

19.4.7 Speed Reducer

Gear trains are used for transmitting power and also to change the speeds between two or more shafts. Figure 19.23 shows a speed reducer in which bevel gears and spur gear trains are used to obtain speed reduction. It consists of the gear box body 1 to which is fixed the end support 2. The spur gear 7 is fixed on the shaft 3 along with the roller bearings 12 and 13. The driven gear 6 is then keyed in position.

The bevel gear 9 and spur gear 8 are mounted on the shaft 4 along with the bearings at the ends. The bevel gear 10 is mounted on the shaft 5 along with the bearings. The driver pulley 11 is fixed with a key on this shaft. The speed reduction takes place in two stages between the bevel gears 10 and 9 and between spur gears 8 and 7.

The bearings are provided with bearing covers 15, oil seals 14, bearing retainer 16, and circlips wherever necessary. Eight tapped holes of M8 and free holes of ϕ 8 are provided on the body to fix the cover. The holes of ϕ 6 are made in the body for dowel pin location.

Exercise

The assembly drawing of a speed reducer is shown in Fig. 19.23. Draw the details of the following, to suitable scale:

(*i*) End support 2, (*ii*) Shaft 4, (*iii*) Spur gear 7, (*iv*) Bevel gear 9, and (*v*) Bearing cover 15.

www.EngineeringBooksPdf.com

PRODUCTION DRAWINGS 20

20.1 INTRODUCTION

A production drawing, also known as working drawing, supplies information and instructions for the manufacture or construction of machines or structures. A production drawing should provide all the dimensions, limits, special finishing processes, surface quality, etc. The particulars of material, the number of components required for the assembly, etc., are given in the title block. The production drawing of a component should also indicate the sub-assembly or main assembly where it will be assembled.

Since the working drawings may be sent to other companies to make or assemble the unit, the drawings should confirm with the standards followed in the country. For this reason, a production drawing becomes a legal document between the parties, in case of disputes in manufacturing.

Working drawings may be classified into two groups : (*i*) detail or part drawings and (*ii*) assembly drawings.

20.2 TYPES OF PRODUCTION DRAWINGS

20.2.1 Detail or Part Drawings

A detail or part drawing is nothing but a production or component drawing, furnishing complete information for the construction or manufacture of the part. This information may be classified as:

1. **Shape description** This refers to the selection of number of views to describe the shape of the part. The part may be drawn in either pictorial or orthographic projection; the latter being used more frequently. Sectional views, auxiliary views and enlarged detailed views may be added to the drawing in order to provide a clear image of the part.

2. **Size description** Size and location of the shape features are shown by proper dimensioning. The manufacturing process will influence the selection of some dimensions, such as datum feature, tolerances, etc.

3. **Specifications** This includes special notes, material, heat treatment, finish, general tolerances and number required. All this information is mostly located near the title block.

4. **Additional information** Information such as drawing number, scale, method of projection, date, names of the parts, the draughter's name, etc., come under additional information which is included in the title block.

Since the craftsman will ordinarily make one component at a time, it is advisable to prepare the production drawing of each component, regardless of its size, on a separate sheet. Figures 20.1 and 20.2 show the detailed drawings of a template jig and gear.

www.EngineeringBooksPdf.com

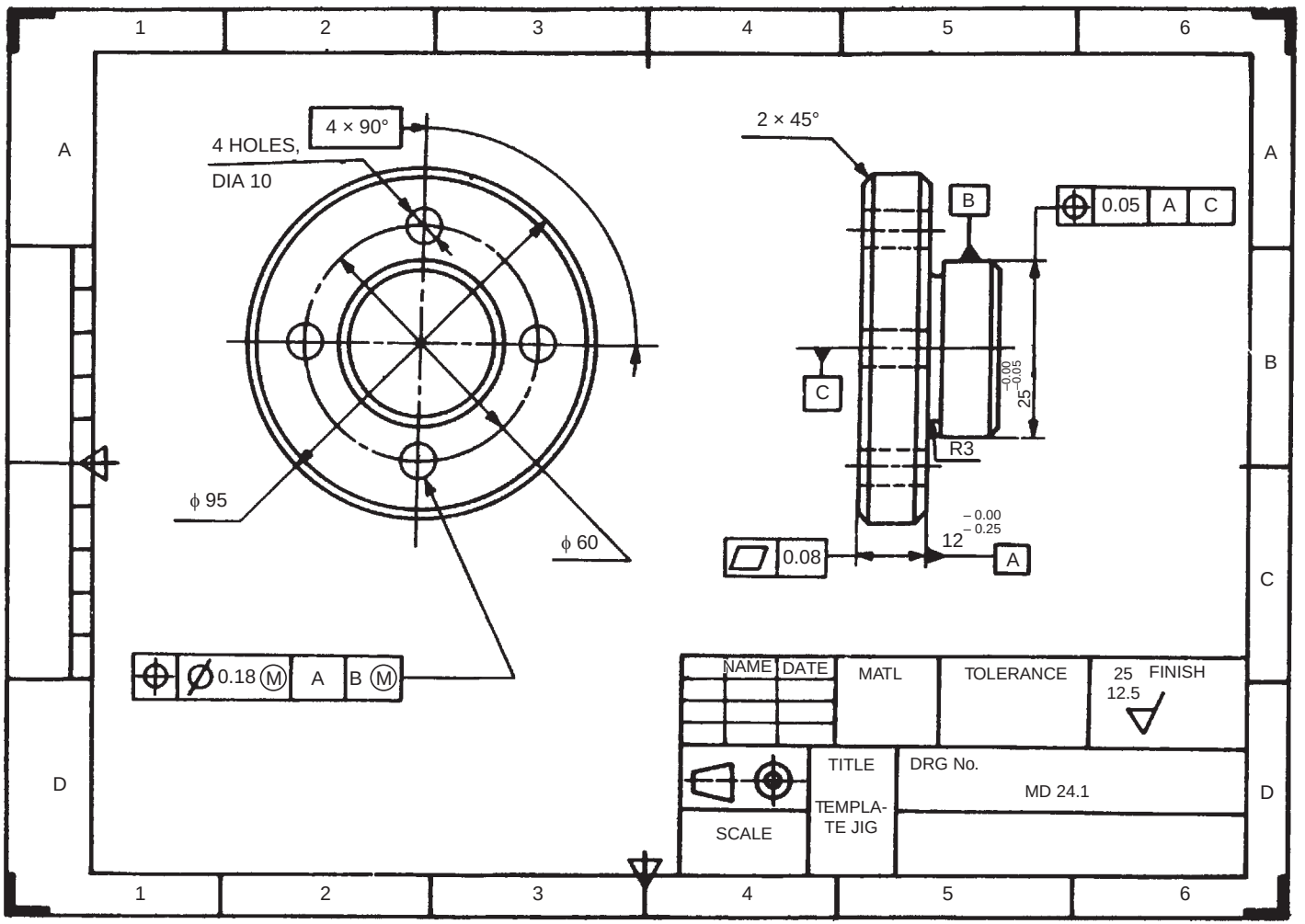

Fig. 20.1 Template jig

www.EngineeringBooksPdf.com

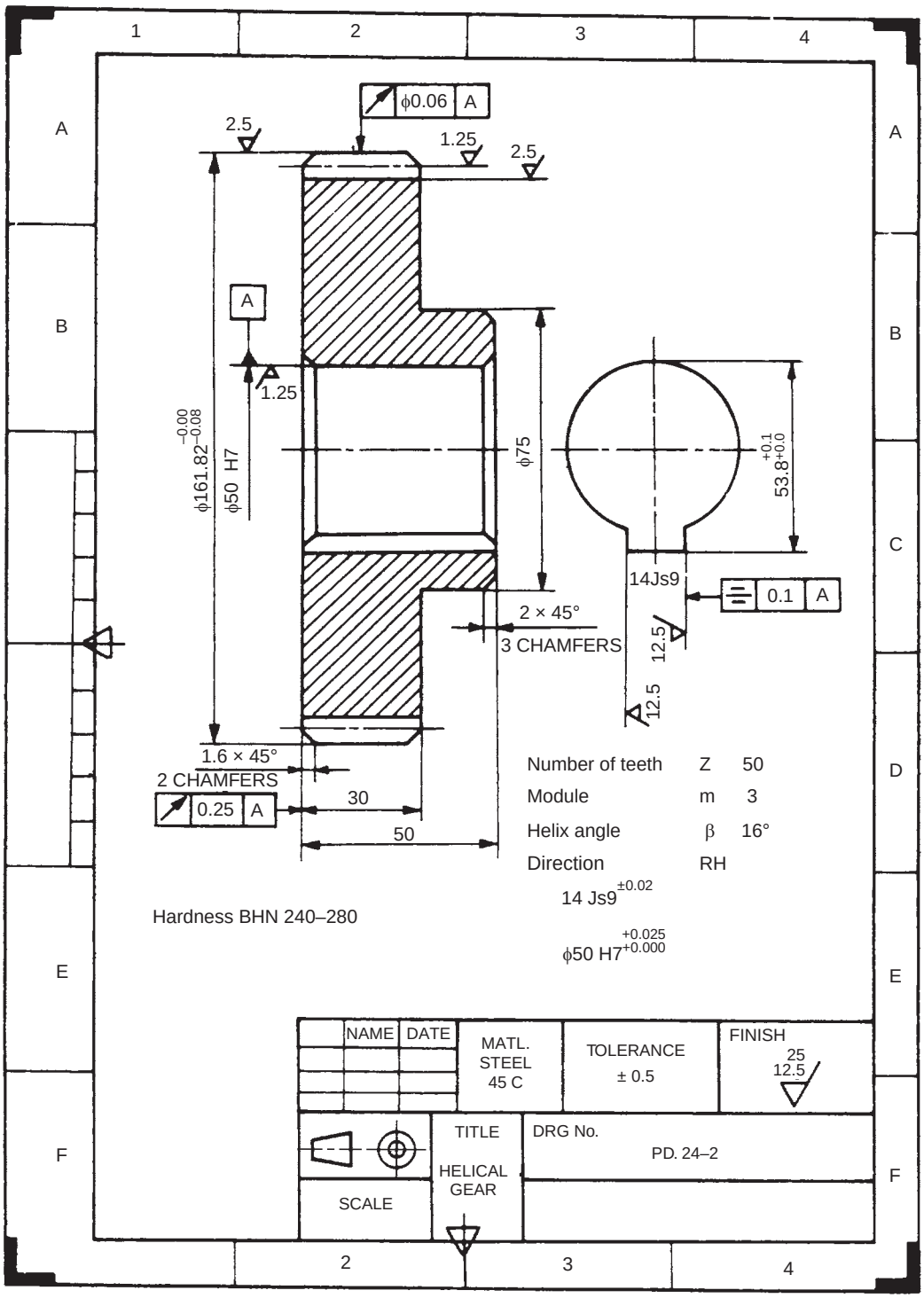

Fig. 20.2 Gear

www.EngineeringBooksPdf.com

20.2.2 Working Assembly Drawings

It is usually made for simple machines or jobs, consisting of a relatively smaller number of simple parts. All the dimensions and information necessary for the manufacture of a part and for the assembly of the parts are given directly on the assembly drawing. Separate views of specific parts, in enlargement, showing the mating of parts, may also be drawn, in addition to the regular assembly drawings. Figures 20.3 and 20.4 show the detailed assembly of a tea-poy and crank assembly respectively.

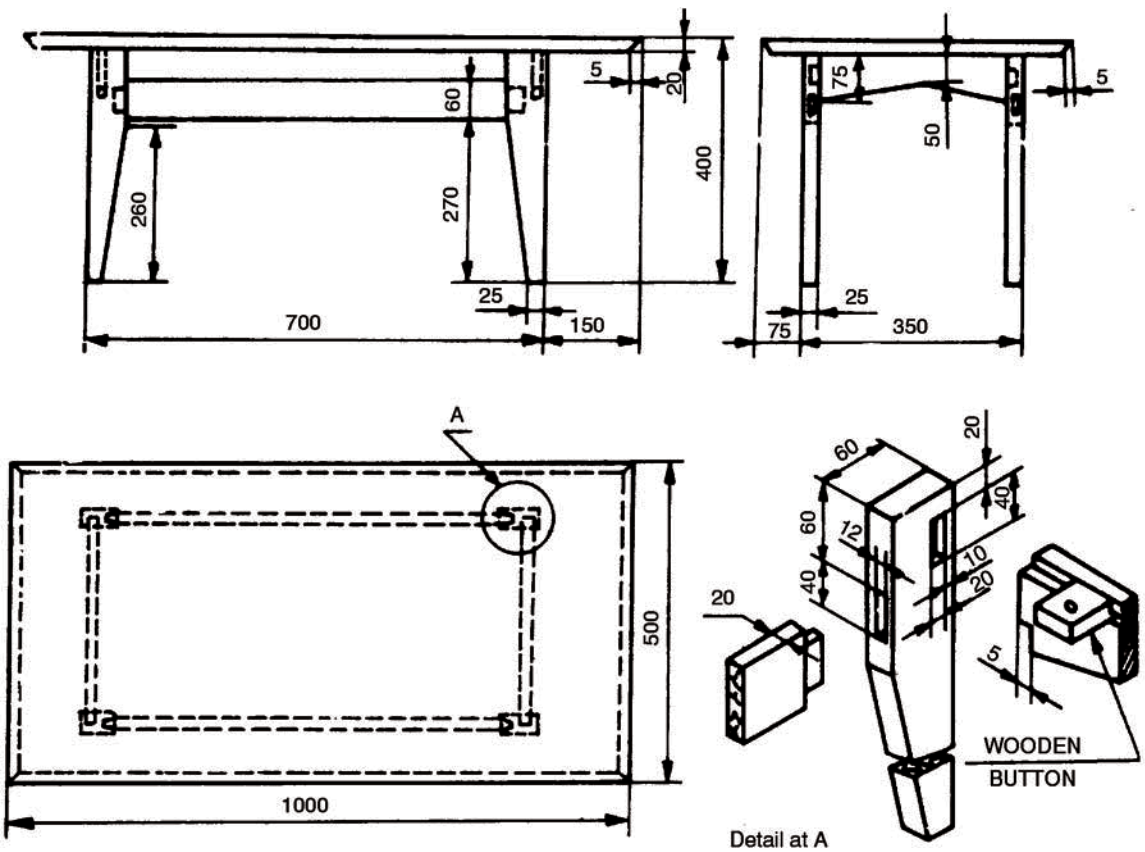

Fig. 20.3 Detailed assembly drawing

20.2.3 Detailed Drawings and Manufacturing Methods

The type of manufacturing process influences the selection of material and detailed features of a part (Fig. 20.5). As shown in Fig. 20.5*a*, if the component has to be cast, then rounds and fillets are to be added to the part. Additional material will also be provided where surface requires finishing.

Several drawings may be made for the same part, each one giving only the information necessary for a particular stage in the manufacture of the part. A component which is to be produced by forging, for example, may have one drawing showing the forged part (Fig. 20.5*b*) with no machining details and a separate drawing for the machining of the forging (Fig. 20.6).

www.EngineeringBooksPdf.com

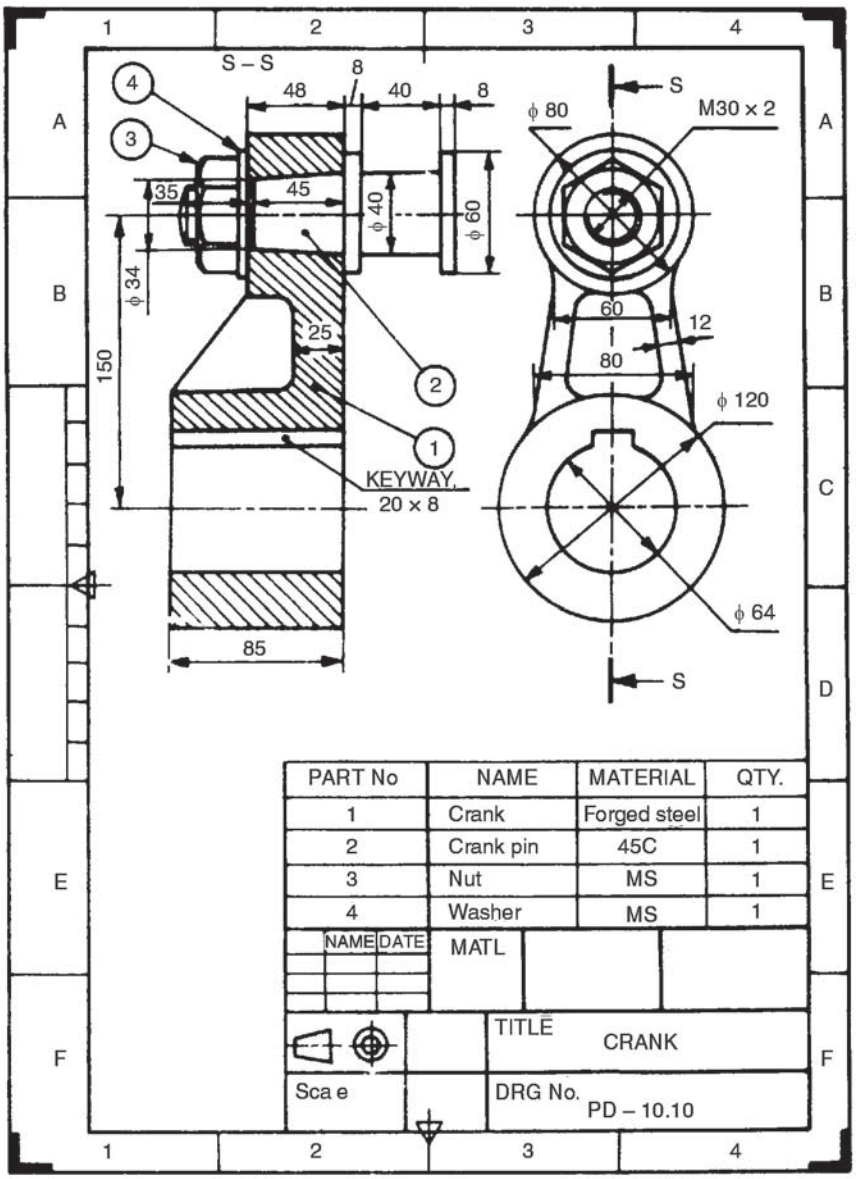

Fig. 20.4 Crank

20.3 EXAMPLE

20.3.1 Petrol Engine Connecting Rod

Connecting rod assembly of a petrol engine, the big end of which is split into two halves is shown and described in Chapter 19 (Fig. 19.1).

The component drawings of the above assembly are shown in Fig. 20.7, with details of tolerances, surface finish, etc., as required for production work. The rod and cap are made of forged steel and machined to close tolerances at both the big end as well as the small end as shown. The bearing brasses are made of gun-metal, because it has good resistance to corrosion.

www.EngineeringBooksPdf.com

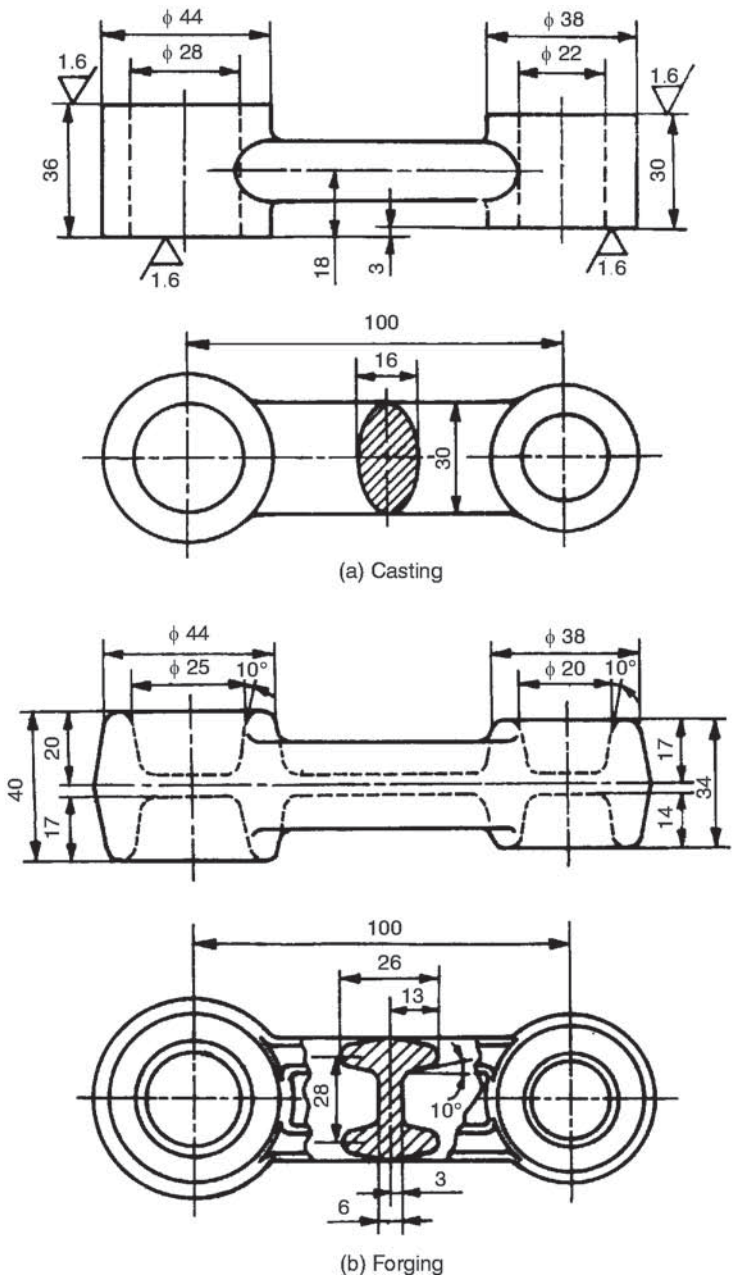

Fig. 20.5

Oil groove is provided at the centre of the bearing. The bearing bush is made of phosphor bronze, to provide low coefficient of friction. Oil groove is provided in the bush for lubrication between the pin and bearing. The bore of the bush is given a tolerance to have a close sliding fit with the gudgeon pin. The external diameter is provided with positive tolerance on both the limits to ensure interference fit with the small end of the rod. The square headed bolts (5) and castle nuts (6) are used as standard components.

www.EngineeringBooksPdf.com

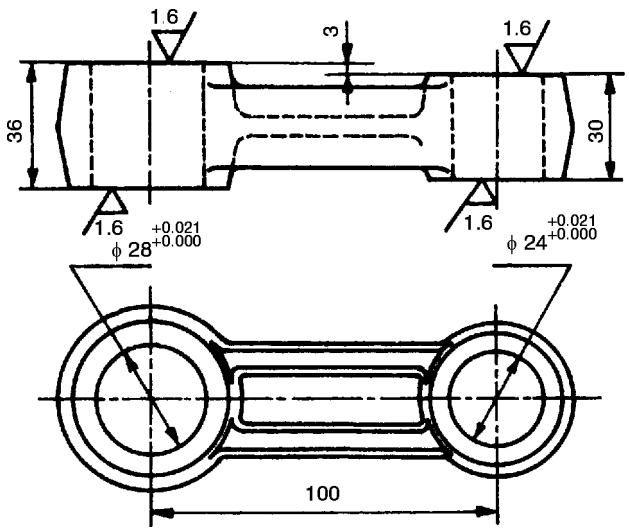

Fig. 20.6

THEORY QUESTIONS

20.1 What is production or working drawing of a component?

20.2 What information must be provided on production drawing of a machine to facilitate its manufacture and assembly.

20.3 Why working drawings must be prepared as per the standards?

20.4 Classify and describe the various types of working drawings.

20.5 What is a working assembly drawing?

20.6 What kind of drawings are to be prepared for producing, (*a*) forged component, and (*b*) cast component.

DRAWING EXERCISES

20.1 Prepare working drawings of the following components of the split sheave eccentric, shown in Fig. 19.7.

(*a*) Sheave piece (1)

(*b*) Sheave piece (2), and

(*c*) Strap (7).

Indicate the fits and tolerances recommended for the above components.

20.2 Make the working drawings of the components of the angle plummer block, shown in Fig. 19.21. Indicate suitable fits and the corresponding tolerances for the parts: (*a*) Brasses and base, (*b*) Brasses and the shaft (not shown).

20.3 Study the lathe speed gear box shown in Fig. 19.10*a* and make a working drawing of the spindle. Indicate the tolerances, surface finish, etc., wherever necessary.

20.4 Study the milling machine tail-stock shown in Fig. 19.11 and prepare the production drawings of, (*a*) body (1), (*b*) centre (2), and (*c*) screw (4). Indicate the fits and the corresponding tolerances on the body and centre. Write down the process sheet for making the body.

www.EngineeringBooksPdf.com

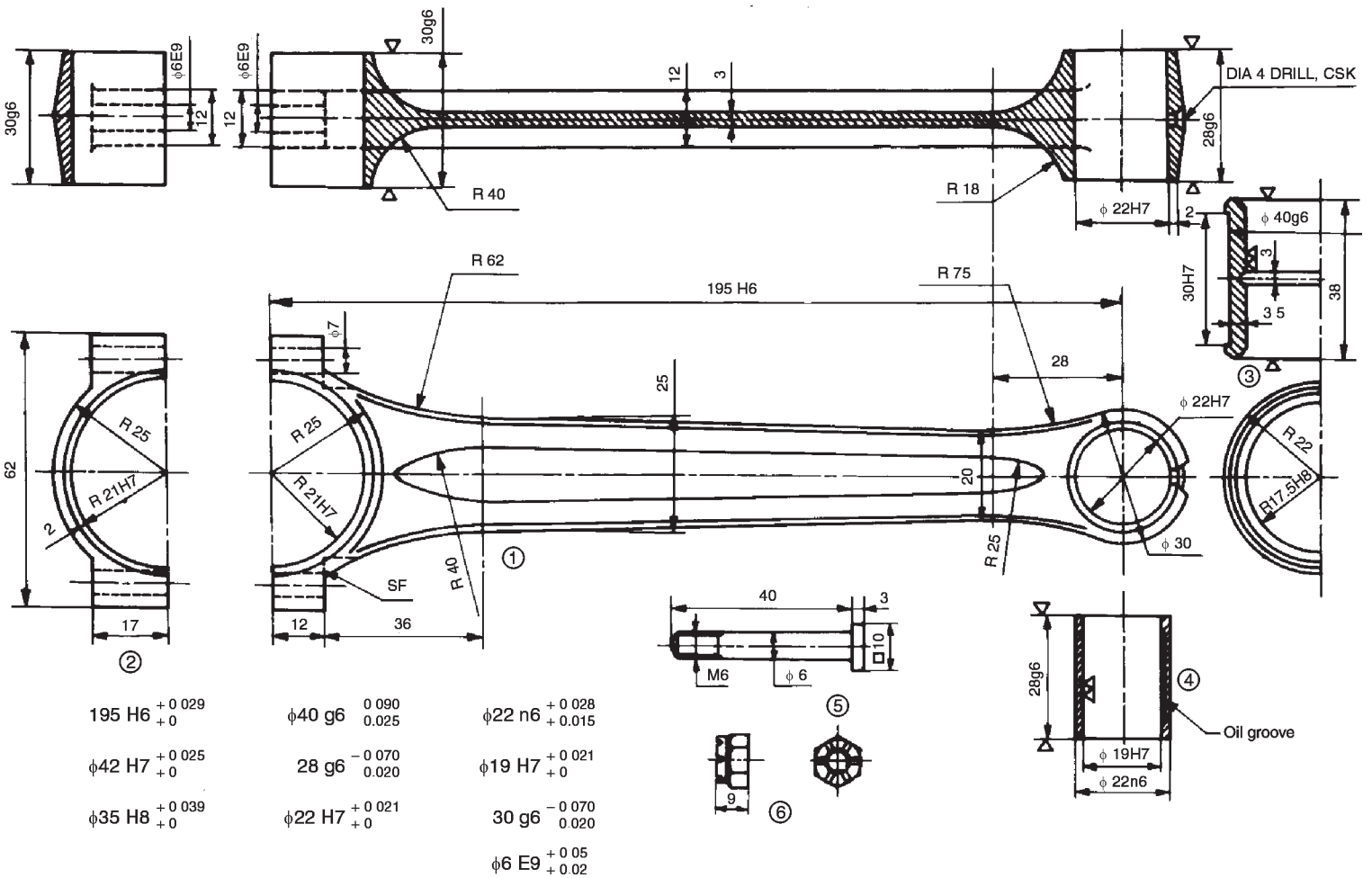

Fig. 20.7 Details of petrol engine connecting rod

www.EngineeringBooksPdf.com

COMPUTER AIDED DRAUGHTING

21

21.1 INTRODUCTION

Engineering drawing, in general is applied to drawings for technical use and is concerned with the direct graphical representation of designs for physical objects, as used in engineering and science. Computer aided draughting on the other hand, is the application of conventional computer techniques, with the aid of data processing systems, to present a graphical solution. It deals with the creation, storage and manipulation of models of objects and their pictures. The user generates graphics by interactive communication with the computer. Graphics are displayed on a video display and can be converted into hard copy with a plotter or printer.

Presently, there are many independent graphics software packages available for use with micro-computers. Graphics package is a set of functions, which are called by the user in his application program to generate the drawings and pictures. AutoCAD was developed to run on any micro-computer system.

Interactive computer graphics helps in developing simulation models of real life systems, where a lot of risk is involved otherwise. For instance, flight simulators can be used to train the pilots before handling the actual planes.

21.2 OVERVIEW

AutoCAD provides a set of entities for use in constructing the drawing. An entity is a drawing element such as a line, circle, etc. By typing a command on the keyboard or selecting it from a menu, the entity can be drawn. Parameters should be supplied for the chosen entity in response to the prompts on the screen. The entity is then drawn and appears on the screen. The effect of every change made appears on the screen immediately.

These entities may be erased or moved or copied to form repeated patterns. The information about the drawing also may be displayed.

21.3 REQUIRED EQUIPMENT

Computer aided graphics systems have three major components: the draughter, hardware and software. The physical components of a computer constitute the hardware, such as computer terminal, input devices and output devices. Software is the draughter's instructions to the computer.

21.3.1 Computer

Computers execute the instructions in the input after receiving the input from the user and then produce output. These are classified by size, viz., main frames, mini-computers and micro-computers.

www.EngineeringBooksPdf.com

21.3.2 Terminal

It consists of a keyboard, a cathode ray tube and inter-connections with the computer. The terminal allows the user to communicate with the system.

21.3.3 Keyboard

Keyboard generally resembles typewriter and normally contains many functional keys. This permits communication through a set of alphanumeric and functional keys.

21.3.4 Cathode Ray Tube (CRT)

A CRT is a video display device, consisting of a phosphor coated screen and electron gun. The electron gun throws a beam and sweeps-out raster lines on the screen. Each raster line consists of a number of dots called pixels. By turning the pixels on and off, the images are generated on the screen. One measure of quality of picture produced on the screen is resolution and for good quality of graphics to be drawn, high-resolution screens are used.

21.3.5 Plotters

The plotter makes a drawing as instructed by the computer. Flat bed plotters and drum type plotters are in vogue. Both black and white and colour graphics can be made by the use of different pens.

21.3.6 Printers

Inexpensive impact type of printers, dot matrix printers have rectangular print heads, composed of pins which can be manipulated to form a character. These patterns of pins make dotted characters on paper, when they are forced against ribbon. The output of the dot matrix printers is of low quality and hence they find limited use in graphics applications. These printers are used especially when continuous paper is fed. Ink jet and laser printers are now-a-days used which may be able to print on A4 size cut sheets. The print quality is very good and both line sketches and photographs can be printed. For the purpose of desktop publication, these printers are recommended.

21.3.7 Digitizers

A drawing may be scanned after placing it on the digitizer, thereby converting the picture to a digital form, based on the x, y co-ordinates of individual points. These drawings can also be stored for later use or corrected/modified. Thus, a digitizer is a graphics input device to the computer for display, storage or modification.

21.3.8 Locators and Selectors

These devices enable the user to interact with the computer, in a more natural way. The locators give the position information. The computer receives the co-ordinates of a point from a locator. The examples are thumb wheels, joystick, mouse, track balls, etc. The selectors are used to pick a particular object, but no information is provided about its screen position, *eg*., light pen.

21.4 DISPLAY TECHNOLOGY

In co-ordinate geometry, a line segment consists of infinite number of points whereas in computer graphics a segment has a finite number of pixels. A pixel is the smallest screen element, which can be specified individually. The entire screen resembles a two dimensional array of pixels. These points are addressed by their x and y co-ordinates; the value of x increases from left to right and y likewise from bottom to top. Displays have been built with as many as 4096 × 4096 addressable points and with as few as 256 × 256. The particular points, which lie on the line segment selected, are displayed with the required intensity. This means that they cannot be positioned with infinite precision.

www.EngineeringBooksPdf.com

21.4.1 Plotting the Drawings

AutoCAD drawing may be plotted either by a pen plotter or a printer plotter. Pen plotters are very accurate and multiple colours may be obtained. Printer plotters have limited resolution and smaller paper sizes and produce monochrome output. However, printer plotters are usually faster than pen plotters. For pen plotter, PLOT command is used, whereas for a printer plotter, PRPLOT command is used.

While beginning a plot from the main menu, tell AutoCAD, which portion of the drawing to be plotted. Specify the part of the drawing to be plotted by entering: Display, Extents, Limits, View or window: the response specifies a rectangular area of the drawing.

By Specifying:

D (Display)	—	this option plots the view that was displayed in the current view port just prior to the last SAVE or END command for that drawing.
E (Extents)	—	this option is similar to ZOOM extents. The extents are updated automatically as one draws new entities.
L (Limits)	—	plots the entire drawing area as defined by the drawing limits.
V (View)	—	plots a view that was previously saved, using the drawing editor's view command.
W (Window)	—	plots any portion of the drawing. Specify the lower left corner and upper right corner of the area to be plotted.

21.5 BASICS OF OPERATING SYSTEM

Operating system falls in the category of system software. An operating system is a set of programs designed to manage the entire operations of computer system. Basically the operating system performs two fundamental tasks for the computer:

(*i*) managerial task (*ii*) interface task

The operating system does not do any specific task, but it is a general program which assists the user by doing the following operations:

— Controlling all the operations including input/output operations, arithmetic operations and internal transfer of information.

— Communicating with peripheral devices (printer, disk and tape device).

— Supporting the running of other software.

One can say that the computer system without an operating system is like an office without a manager.

21.6 STARTING AutoCAD

Once AutoCAD 2004/05 software is located on to the computer and the operating system is available, one can start using the facility. Soon the computer is turned on, the operating system is automatically loaded. Various application icons appear on the windows screen. AutoCAD can be started by double-clicking on the AutoCAD icon available on the desktop of the computer.

The various components of the initial AutoCAD screen are as shown in Fig. 21.1 and Fig. 21.2 consisting of :

1. **Drawing Area** The drawing area covers a major portion of the screen. Various objects can be drawn in this region by the use of AutoCAD commands. The position of the pointing device is represented on the screen by the cursor. On the lower left corner, a coordinate system icon is present. On the top right corner, standard windows buttons are also available.
2. **Command Window** At the bottom of the drawings area, command window is present and commands can be entered by keyboard.

www.EngineeringBooksPdf.com

3. **Status Bar** At the bottom of the screen, status bar is displayed, which will make it easy to change the status of some AutoCAD functions by proper selection.
4. **Standard Tool Bar** Standard tool bar displays coordinates and they will change only when a point is specified. The absolute coordinates of the cursor will be specified with respect to the origin.
5. **Snap** Snap mode allows the cursor to be moved in specified/fixed increments.
6. **Grid** By choosing this button, grid lines are displayed on the screen and can be used as reference lines to draw AutoCAD objects.
7. **Ortho** By selecting the orthomode, lines can be drawn only at right angles on the screen.
8. **Polar** The movement of the cursor is restricted along a path based on the angle set as the polar angle. One can use either polar mode or orthomode only at a particular time.

One can also use function keys for quick access to certain commands. Only important functions defined by AutoCAD 2004 are given below:

Function Key	*Function*
F1	Online help
F2	Toggles between command window on and off
F5	Switches among Isoplanes Top, right and left
F6	Toggles between coordinates on and off
F7	Toggles between grid on and off
F8	Toggles between orthomode on and off
F9	Toggles between snap mode on and off
F10	Toggles between Polar tracking on and off

21.6.1 Invoking AutoCAD Commands

After starting AutoCAD and when the cursor is in the drawing area, to perform an operation, commands must be invoked. The following methods are provided to invoke the commands.

1. **Keyboard** Using keyboard, command name can be typed at the command prompt and by pressing ENTER or SPACE BAR, the command can be invoked.
2. **Menu** The menu bar is at the top of the screen which displays the menu bar titles. As the cursor is moved over this, various titles are highlighted and by means of pick button, a desired item can be chosen. Once it is selected, the corresponding menu is displayed directly under the title. A command can be invoked by picking from this (Fig. 21.3*a*).
3. **Draw Toolbar** This is an easy and convenient way to invoke a command. This is displayed on the left extreme of the initial AutoCAD screen (Fig. 21.3*b*) and very easy to choose by picking.
4. **Tool Palettes** These are shown on the right side of the monitor screen (Fig. 21.2). An easy and convenient way of placing blocks/patterns of hatching in the present drawing. By default, AutoCAD displays the tool palettes on the right of the drawing area. Various hatching patterns also can be selected from this.

21.6.2 Interactive Techniques

Developing a drawing by AutoCAD is done by interactive technique, so that it is easy to follow and achieve the results. The popular interactive techniques are layers, drawing insertion, object snap, zooming, panning, plan view and 3D views, view ports, resolution, editing the drawing and many more.

www.EngineeringBooksPdf.com

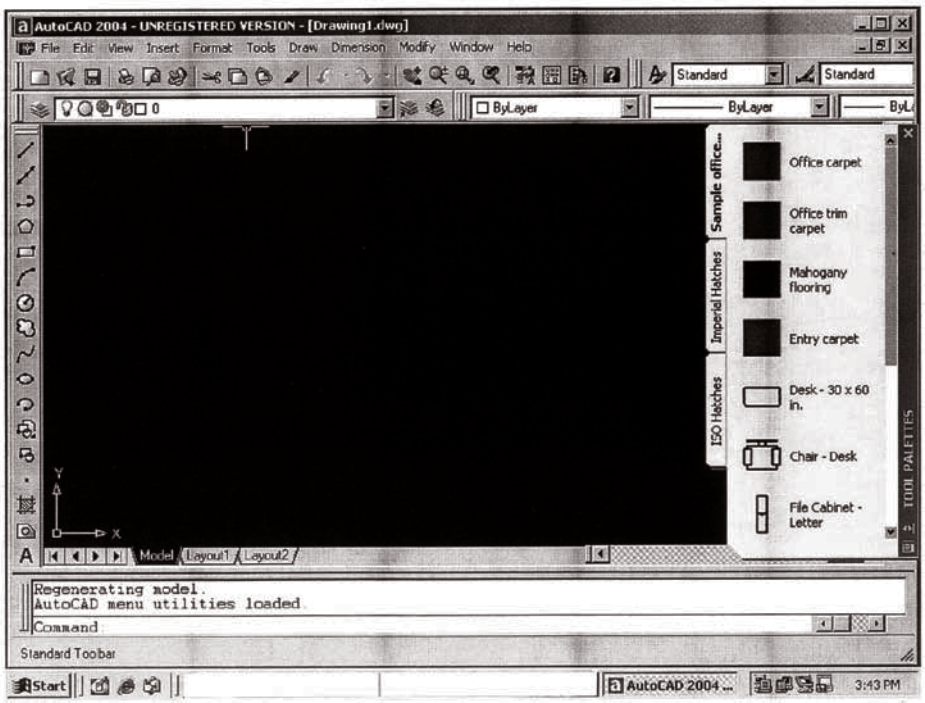

Fig. 21.1

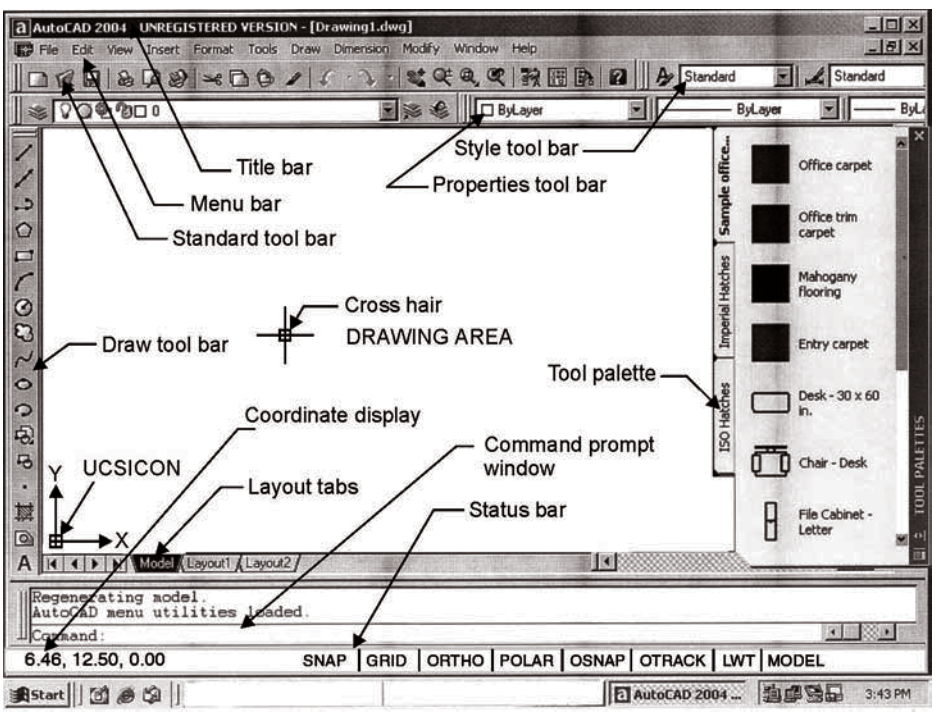

Fig. 21.2

www.EngineeringBooksPdf.com

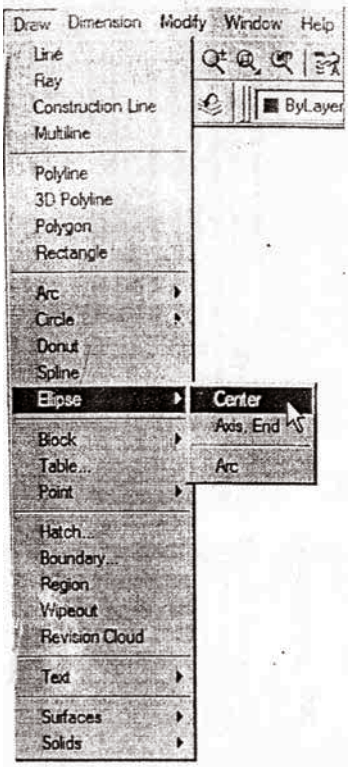

Fig. 21.3 (a) Invoking the **ELLIPSE**

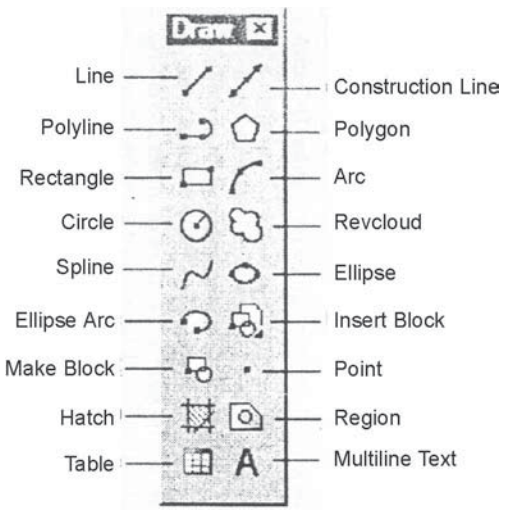

21.3 (b) The **Draw** toolbar

The layering concept is similar to the transparent overlays used in many draughting applications. This allows the user to view and plot-related aspects of a drawing separately or in any combination. In drawing insertion, a drawing can be stored in a drawing file and this may be inserted in subsequent drawings for any number of copies. To refer to geometric features of existing objects when entering points, the object snap may be used. The visual image of the drawing on the screen may be magnified or shrunk by zooming. Whereas, panning allows viewing different portions of the drawing, without changing the magnification. In plan view, the construction plane of the current user co-ordinate system is parallel to the screen. The drawing may also be viewed from any point in space (even from inside an object). The graphics area of the screen can be divided into several view ports, each displaying a different view of the drawing. Physical resolution refers to the amount of detail that can be represented. This resolution can be changed at any time. The editing facilities of AutoCAD make it easy to correct or revise a drawing. Multiple copies of an object, arranged in rectangular or circular patterns are easy to create.

21.7 PLANNING FOR A DRAWING

While planning a drawing in Auto CAD, one has to organize some of the information such as choosing the units, co-ordinates, etc.

21.7.1 Co-ordinate System

The system used by all the CAD packages is generally the rectangular cartesian co-ordinate system designated as x, y and z axes. The positive direction of these axes follows the right hand rule. Any point in space can therefore be designated by the co-ordinate values of these 3 axes. *viz.*, x, y and z.

www.EngineeringBooksPdf.com

The co-ordinates can be input into the system by:

(*i*) The direct input of co-ordinate values in the respective order of x, y and z. If z co-ordinate is not mentioned, then the values are assumed to be at a single given level.

(*ii*) Specifying the co-ordinates in an incremental format from the current cursor position in the drawing area. The distance is specified by using @ parameter before the actual values. The incremental values apply to all the ordinates.

(*iii*) Point co-ordinates may also be specified using the polar co-ordinate format. It can also be an extension of the incremental format.

(*iv*) Using the mouse button, the cursor may be taken to the required position and the button is clicked.

It is generally necessary to specify the limits of the drawing with the help of the command LIMITS, where the user will be asked to specify the lower left corner and upper right corner of the drawing sheet size. This establishes the size of the drawing.

21.7.2 Basic Geometric Commands

By way of choosing the basic commands in AutoCAD, one can make simple drawings. The various entities that can be used for making an AutoCAD drawing in 2D are: point, line, ellipse, polygon, rectangle, arc, circle, etc.

Generally AutoCAD provides a default option as <> in each of the command response. The value shown in the angle brackets is the most recently set value. To have the same value, one has to simply press the <Enter> key. The various options available for each command are shown in the command window. But the user need to respond by choosing one letter in most cases, which makes the AutoCAD choose the right option.

21.7.3 Drawing Entity-POINT

The point command locates a point in the drawing.

Command: POINT (one has to give the location)

POINT: 25, 45 location of the point. Thus, a point is placed at the given location (25, 45).

After setting the limits of the drawing, the following drawing aids/tools may be used to locate specific points on the screen (electronic drawing sheet).

ORTHO Command—this is orthogonal drawing mode. This command constrains the lines drawn in horizontal and vertical direction only.

Command: ORTHO

ON/OFF <current>:

SNAP Command—this command is used to set increments for cursor movement. If the screen is on SNAP mode, the cursor jumps from point to point only. The cursor movement can be effectively controlled using the SNAP command. This is useful for inputting the data through digitizer/mouse.

Command: SNAP

Snap spacing or ON/OFF/Aspect/Locate/Style <current>: 0.1 (default)

GRID Command-working on a plain drawing area is difficult since there is no means for the user to understand or correlate the relative positions or straightness of the various objects made in the drawing. The command enables to draw dotted lines on the screen at pre-defined spacing. These lines will act as graph for reference lines in the drawing. The grid spacing can be changed at will. The grid dots do not become part of the drawing.

Command: GRID

Grid spacing or ON/OFF/Snap/Aspect <0>: 0.5 (default)

www.EngineeringBooksPdf.com

Function keys may create drawing aids/tools also. The function keys F7, F8 and F9 act as toggle keys for turning ON or OFF of GRID, ORTHO and SNAP tools respectively.

HELP Command—AutoCAD provides with complete help at any point of working in the program. HELP can be obtained for any of the individual commands. Most of the information required by the user is generally provided by the help which is always instantaneous.

SAVE Command—AutoCAD provides the following commands to save the work/drawing on the hard disk/floppy diskette:

SAVE SAVEAS QSAVE

Command: SAVE

Save drawing as <current name>: KLNI

21.7.4 Drawing Entity-LINE

Lines can be constrained to horizontal/vertical by the ORTHO commands. CLOSE option uses the starting point of the first line segment in the current LINE command as the next point.

1. Lines can be drawn using co-ordinate system (rectangular cartesian co-ordinates). To draw a rectangle (Fig. 21.4a):

   Command: LINE
   From point: 10, 20 ↵
   To point: 40, 20 ↵
   To point: 40, 60 ↵
   To point: 10, 60 ↵
   To point: ↵

2. It is also possible to specify the co-ordinates in the incremental format as the distances from the current cursor position in the drawing area. The distance is specified by using the @ parameter before the actual value. To construct a triangle of given altitude (30) and base (40) (Fig. 21.4b):

   Command: LINE
   From Point: 10, 20 ↵
   To point: @ 40, 0 ↵
   To point: @ – 20, 30 ↵
   To point: ↵

3. It is also possible to specify the point co-ordinate using the ploar co-ordinate format. To construct a hexagon (Fig. 21.4c) of side 30:

   Command: LINE
   From point: 10, 20 ↵ (A)
   To point: @ 30<0 ↵ (B)
   To point: @ 30<60 ↵ (C)
   To point: @ 30<120 ↵ (D)
   To point: @ 30<180 ↵ (E)
   To point: @ 30<240 ↵ (F)
   To point: close

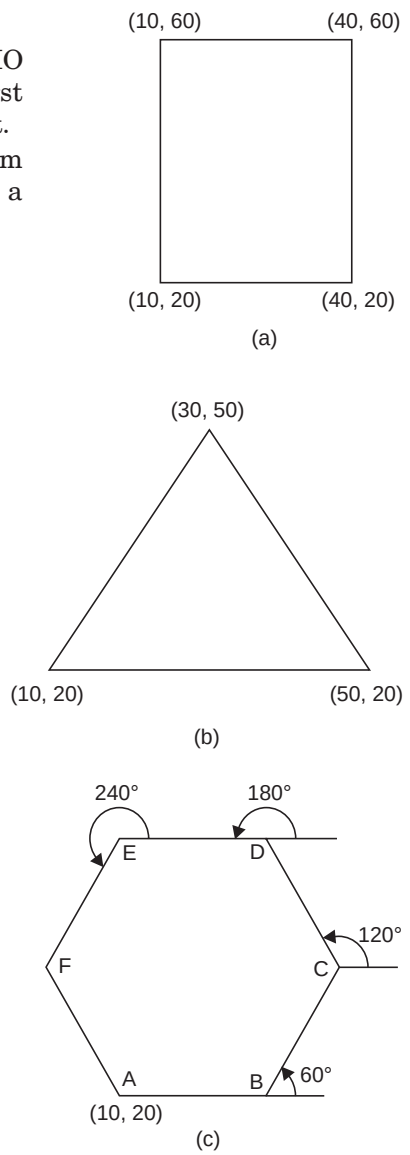

Fig. 21.4

www.EngineeringBooksPdf.com

21.7.5 Drawing Entity-ELLIPSE

This command allows one to draw ellipses or egg shaped objects. From Release 13 onwards, ellipse is treated as a separate entity. The methods available for making ellipses are:

1. By means of axis end points: (Fig. 21.5a)

   Command: ELLIPSE <axis end point 1>/ center: point ↵

   Axis end point 2: (point)

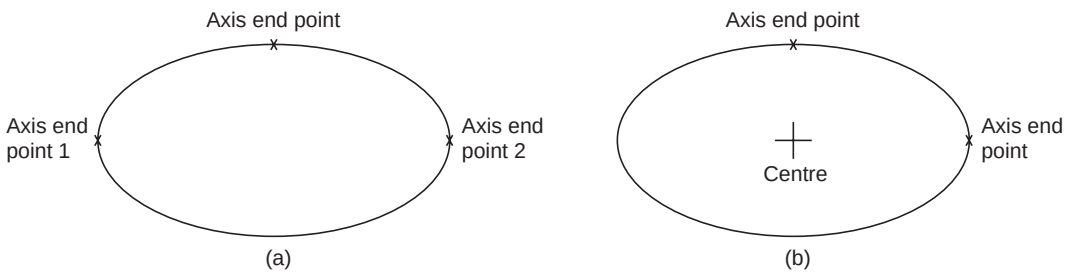

Fig. 21.5

   <other axis distance>/ Rotation:

   Now, if the distance is entered, AutoCAD interprets it as half the length of the other axis.

2. By means of centre, axis end points (Fig. 21.5b)

   Command: ELLIPSE <axis end point 1>/ centre: C ↵

   Centre point and one end point of each axis should be provided for the response of the AutoCAD.

21.7.6 Drawing entity-POLYGON

This option permits to make/draw polygons from 3 to 24 sides in a number of ways:

1. For making inscribed/circumscribed polygon with a side parallel to x-axis: (Fig. 21.6a, b)

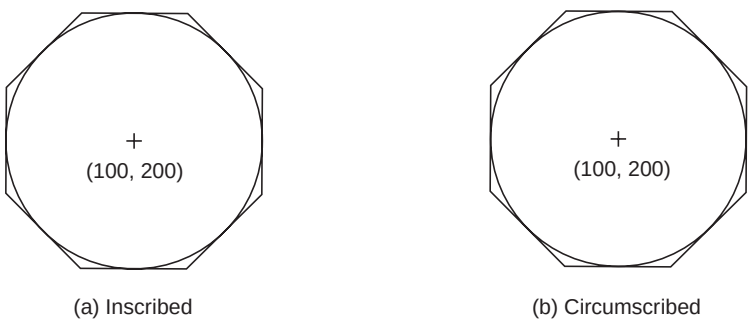

Fig. 21.6

   Command: POLYGON

   Number of sides: 8

   Edge/ <centre of polygon>: 100, 200 ↵

   Inscribed / circumscribed about a circle (I/C): I or C ↵

   Radius of circle: 80

www.EngineeringBooksPdf.com

2. With edge option, specifying the size of the edge and orientation: (Fig. 21.7)

   Command: POLYGON

   Number of sides: 7

   Edge/<center of polygon>: E ↵

   First end point of edge: 15, 15 ↵

   Second end point of edge: 15, 30 ↵

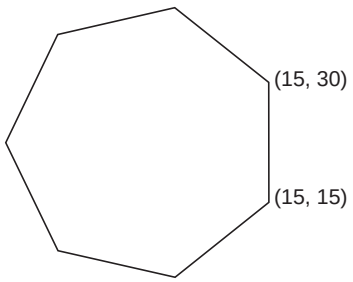

Fig. 21.7

The above and various other entities that can be used for making an AutoCAD drawing may also be selected from the tool bar.

21.7.7 Drawing Entity-RECTANGLE

A rectangle is a polygon based on two opposite corner points, known as diagonal points (Fig. 21. 8).

Command: RECTANGLE

First corner: 10, 15 ↵

Second corner: 60, 50 ↵

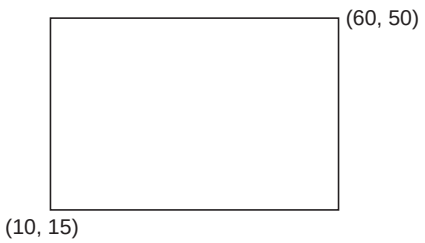

Fig. 21.8

Or from the tool bar menu icon, the pointing device can drag the rectangle and the rectangle can be completed.

21.7.8 Drawing Entity-CIRCLE

Circle command offers several methods for drawing circles, the default being to choose a centre point and enter or pick a diameter or radius (Fig. 21. 9).

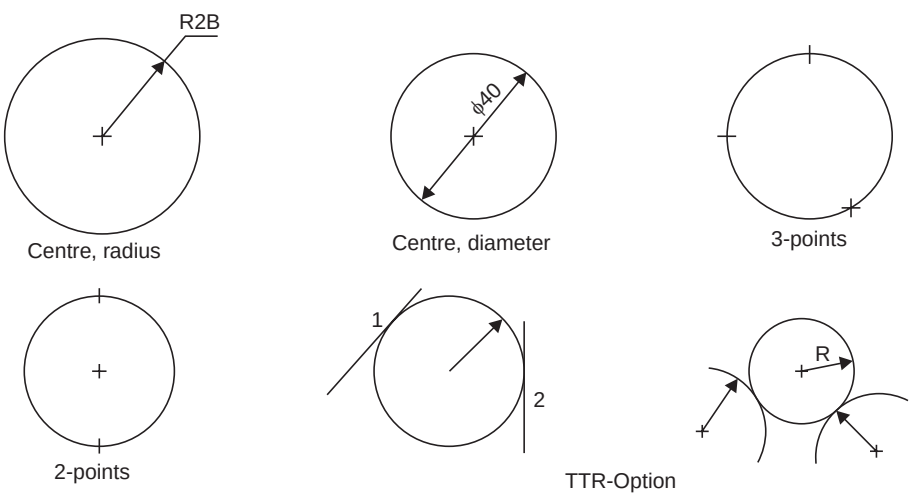

Fig. 21.9

Command: CIRCLE

1. 3P/ 2P/ TTR/ <centre point>:

   Pick a centre point or enter an option

www.EngineeringBooksPdf.com

2. Diameter/ <Radius><current default>: select D or R
3. 3P (3 point) option: one is prompted for a first, second and third point. The circle will be drawn to pass through these points.
4. 2p (2 point) option: one is prompted for the selection of two points which form the opposite ends of the diameter.
5. TTR option: allows one to define a circle based on two tangent points and a radius. The tangent points can be on lines, arcs or circles.

21.7.9 Drawing Entity–ARC

Arc command permits to draw an arc, using a variety of methods.

Command: ARC

1. Centre/ <start point>: pick a start point using mouse or select C for more options.
2. Centre/End/ <second point>: pick a second point of the arc or select C, if option is C.
3. Angle/length of chord/end point: pick end point of the arc, if option is E.
4. Angle/Direction/Radius/ <centre point>: pick end point of the arc or specify the option. Options (Fig. 21. 10.)

Angle — "included angle" prompt appears, to enter the value.

Centre — enter the location of an arc's centre point-at the prompt centre-pick a point,

Direction — enter a tangent direction from the starting point of an arc. At this prompt, pick a point with cursor.

End — at this prompt, pick the end point of the arc.

Length — enter the length of a arc's chord. At this prompt, enter a length or drag and pick a length with cursor.

Radius — at the prompt "radius", enter a radius value.

Start point — enter the beginning point of an arc.

21.8 OBJECT SELECTION

Editing capabilities are the most useful part of AutoCAD system, by making use of the already existing drawing. For the purpose of editing an object, it is necessary to make selection of the objects in the drawing. There are various options available for the selection of an object:

1. Pick box—the cursor is converted to a small box/square, called pick box. By pressing the left button of the mouse when the pick box touches an entity, the object can be selected for editing.
2. Window option—a single or group entities can be selected by bringing them fully inside a rectangular window. Entities, which lie only partially inside the boundaries of window, will not be selected. Rectangular window may be created by picking the first corner, by pressing the left button and then moving the mouse to the desired position of diagonally opposite corner. Selection of the object is complete, by pressing the button again.

www.EngineeringBooksPdf.com

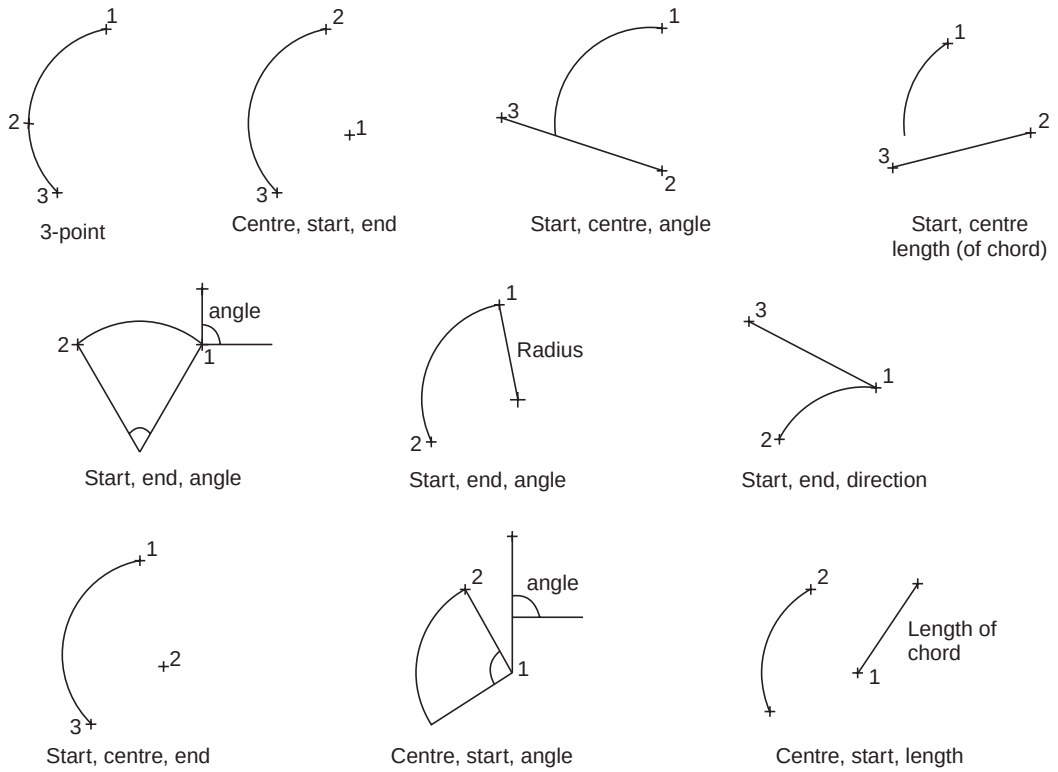

Fig. 21.10

21.8.1 Edit Commands

The commands used for modifying the drawings fall under this category. Using these commands, the objects may be erased, retrieved, moved to another location, made into multiple copies, rotated, enlarged, mirror imaged, part of a drawing may be moved and the above effects can also be reversed (undo).

ERASE Command—this lets the entities to be permanently removed from the drawing. The command format is

Command: ERASE

Select objects: (desired objects) once it is entered, the objects/portion of the object is erased/deleted.

OOPS Command—this restores the entities that have been inadvertently ERASED. Whenever ERASE command is used, a list of entities erased is retrieved by this command.

Command : OOPS

Once it is entered, it restores all the entities erased by the recent ERASE command. Once another ERASE is done, the list of entities erased by the previous ERASE command is discarded. OOPS cannot be used to restore them.

AutoCAD allows backup step by step to an earlier point in an editing session, using the UNDO command. This stores all the sequences made by the user in the current drawing session.

www.EngineeringBooksPdf.com

UNDO Command—this command allows to undo several commands at once. This command is used for correcting any errors made in the editing process. When a SAVE option is used, then the UNDO cannot do anything before that.

Command: UNDO

If the response contains a number, that many number of preceding operations will be undone.

REDO Command—if REDO is entered immediately after a command that undoes something, it will undo the UNDO.

Command: REDO

An UNDO after REDO will redo the original UNDO.

OFFSET Command—this constructs an entity parallel to another entity at either a specified distance or through a specified point.

MIRROR Command—this allows to mirror the selected entities in the drawing. The original objects can be deleted (like a move)/retained (like a copy).

MOVE Command—the move command is used to move one/more existing drawing entities from one location in the drawing to another.

COPY Command—this is used to duplicate one or more existing drawing elements at another location without erasing the original.

21.8.2 Zoom Command

This command acts like a Zoom lens on a camera. It is used to change the scale of the display. This can be used to magnify part of the drawing to any higher scale, for looking closely at some fine detail in the drawing. This is often quite useful during the construction stage. If zoom closer, more details are visible but only a part of the drawing is seen, whereas if zoom out, larger portion of the drawing is seen but less details are visible. This command can be invoked from standard tool bar, from the pull down menu bar, from screen menu or from the command area by entering zoom.

Command: ZOOM

All/Centre/Dynamic/Left/Previous/Vmax/Window/<scale>:

By choosing the option:

All — complete drawing is seen in the drawing limits, even though a part of the drawing lies outside the limits, earlier.

Centre — this option permits to specify the desired centre point. By specifying the height of window, the magnification can be increased/decreased.

Left — it permits to specify the lower left corner of the display window instead of the centre.

Dynamic — this displays the portion of the drawing specified already. Generally selects any portion of the drawing.

Extents — all the objects in the drawing are magnified to the largest extent possible in display.

Previous — the previous display extents are restored to the monitor, but the erased objects do not reappear.

Window — by entering two opposite corners of a window, the area inside the window is enlarged/reduced.

www.EngineeringBooksPdf.com

Scale — by entering a display scale factor, the size of the object can be changed at will in its appearance.

21.8.3 Cross-hatching and Pattern Filling

It is common practice to fill an area with a pattern of some sort. The pattern can help differentiate between components, or it can signify the material composition of an object. This is accomplished by HATCH command. Hatching generates line entities for the chosen pattern and adds them to the drawing. AutoCAD normally groups these lines into a general block.

HATCH Command—performs hatching. The pattern filling is illustrated in Fig. 21.11, by selecting appropriate choice in response to HATCH command.

Command: HATCH

Pattern (? Name/ u, style) <default>:

Pattern name may be entered by choosing various available patterns which will be displayed by choosing u, by interaction, the angle, spacing between the lines and double hatch area may be specified. By choosing style (Fig. 21.11), pattern filling may be achieved.

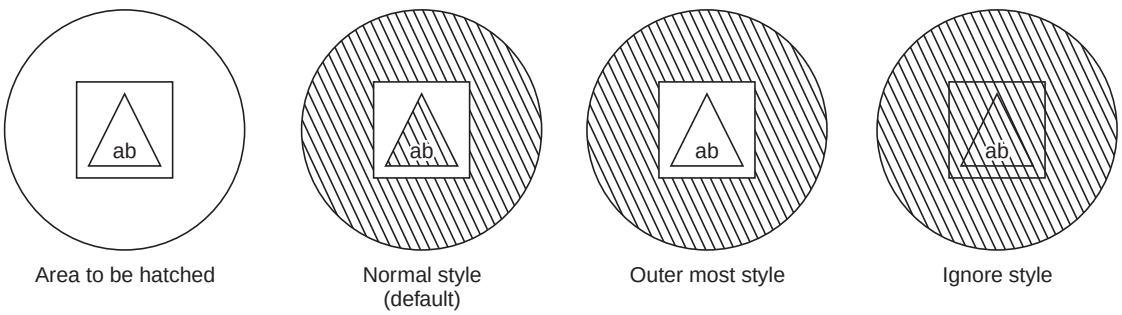

Fig. 21.11

21.8.4 Utility Commands

END Command — this command exits the drawing editor and returns to the main menu and updates the drawing file.

SAVE Command — this command saves the new/modified drawing and returns to the main menu. However, without exiting the drawing editor, if the changes are to be periodically saved, it is desirable to use this command. It protects the work from possible power failures, editing errors, etc.

Command: SAVE

File name <current>: return to save the current file

QUIT Command — this exits the drawing editor without saving the updated version of the current drawing and returns to the main menu. The AutoCAD checksup with the user for one more confirmation to avoid the accidental quitting since all the editing work done would be lost.

TEXT Command — text may be added to a drawing by means of the TEXT command. Text entities can be drawn with a variety of character patterns or fonts and can be stretched, compressed or drawn in a vertical column by applying a style to the font.

www.EngineeringBooksPdf.com

Command: TEXT

Start point or Align/Centre/Fit/Middle/Right/Style:

By choosing:

Start point — Left justifies the text base line at the designated point.

A (Align) — prompts for two end points of the base line and adjusts overall character size so that text just fits between these points.

C (Centre) — asks for a point and centers the text base line at that point.

F (Fit) — similar to 'align', but uses a specified fixed height.

M (Middle) — like 'centre', but centers the text both horizontally and vertically at the designated middle point.

R (Right) — right justifies the text base line at that point.

S (Style) — asks for a new text style.

Null reply — places the new text directly below the highlighted text.

21.9 TYPES OF MODELLING

Geometric modelling provides a means of representing part geometry in graphical representation. This constitutes the most important and complex part, in many software packages. There are a variety of modelling methods available in the industry for the variety of functions. They are:

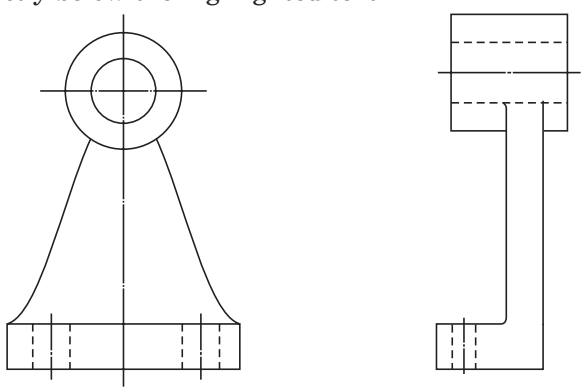

Fig. 21.12

21.9.1 2D Wire Frame

This method consists of a range of 2D shapes which can be used to develop basically the outline of a part, which in most of the cases is composed of lines and circles (Fig. 21.12), this is the easiest and most popular way to model simple parts. They are easy to understand.

21.9.2 3D Wire Frame

This is similar to its 2D counter-part, except that it is drawn in 3 dimensions. This is used in low cost designing systems. The complete object is represented by a number of lines with their end point co-ordinates (x, y, z) and their connectivity relationships. It is difficult to understand the outside of the solid, represented by the wire frame model. Thus, the wire frame model is inadequate for representing the more complex solids (Fig. 21.13).

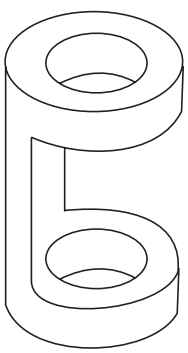

Fig. 21.13

21.9.3 Surface Modelling

It is constructed essentially from surfaces such as planes, rotated curved surfaces and even very complex surfaces. These models are capable of representing the solid, from the manufacturing point of view. No information regarding the interior of the solid model could be available.

21.9.4 Solid Modelling

The best method for three dimensional solid construction is the solid modelling technique, often called constructive solid geometry. In this, a number of 3 dimensional solids are provided as primitives. From these solid primitives, the complex objects may be created by adding or subtracting

www.EngineeringBooksPdf.com

the primitives. A solid is a model that clearly identifies any point in space at either inside or outside of the model. Each body is represented as a single object and not as a complex collection of surfaces.

21.10 VIEW POINT

One can view a drawing from any point in space. The VPOINT command permits to set the viewing point for the current view port. AutoCAD generates the drawing, projecting the entities so that they appear as one would see them from that point in space.

Command: VPOINT

Rotate/<view point><current>.

By choosing

Rotate: specify the view point in terms of two angles; one with respect to the x-axis (in x-y plane) and another from x-z plane.

<view point>: one can enter x, y and z components of the desired view point (separated by commas). A specification of "1, -1, 1" would produce top, right, front view. To generate perspective views, one has to use DVIEW command.

EXAMPLE: An upright cylinder at zero elevation with a radius 10 units and a height of 40 units and enclosed in a square box (at zero elevation with a thickness of 15 units) can be produced with the following sequence of commands:

Command: ELEV

New current elevation <0>: ↵

New current thickness <0>: ↵

Command: CIRCLE (draw a circle with 10 units of radius)

Command: ELEV

New current elevation <0>: ↵

New current thickness <40>: 15 ↵

Command: LINE (draw a square around circle)

In the normal 2D (top) view, this would appear on the screen as shown in Fig. 21.14a. With a view point (1, -1, 1) top, right side, front views appear as shown in Fig. 21.14b.

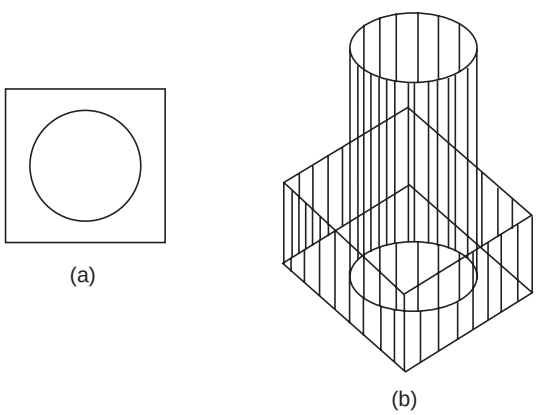

Fig. 21.14

www.EngineeringBooksPdf.com

21.10.1 V-point Co-ordinates View(s) Displayed

0, 0, 1	top view
0, – 1, 0	front view
1, 0, 0	R side view
– 1, 0, 0	L side view
1, – 1,1	top, front, right side view
– 1, – 1, 1	top, front, left side view

21.11 VIEW PORTS

The rectangular portion of the graphics screen in which a drawing is displayed is called the view port. The screen may be divided into multiple view ports and individual controls can be exercised on each view port. One can have upto 4 view ports on screen at once (Fig. 21.15). AutoCAD Release 13 can display 16 view ports maximum on the computer monitor. Each view port can display a different view of the drawing. Panning and zooming can be performed in each view port independently. View ports are useful for checking the correctness of a design. One can edit the drawing in one view port and immediately see the results in all the view ports.

Though several view ports can be displayed on the screen, one can work in only one of the view ports at a given time, known as current view port. This active view port is recognized by a heavy border. The cursor will be in the form of cross hairs when it is inside the current port and will be an arrow outside it. Various views may be displayed in these view ports, such as: 3D view, top view, side view, front view, etc.

Command: VIEW PORTS

Save/restore/delete/join/single/?/2/ <3>/4:

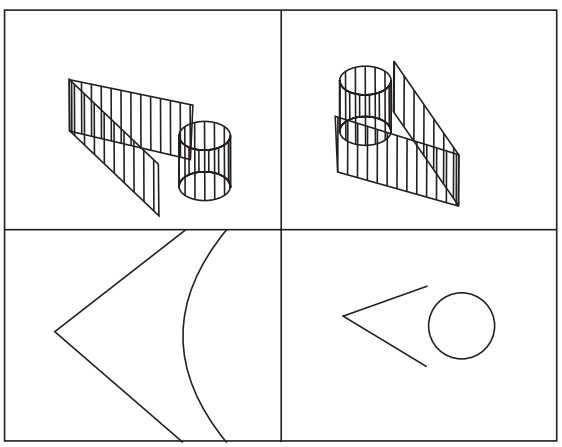

Fig. 21.15

By choosing:

Save option — the active view port can be saved by giving a name upto 31 characters and may be recalled at any time.

Restore option — this restores any saved view port configuration. However, name of the configuration to restore, has to be supplied.

www.EngineeringBooksPdf.com

Delete option	—	it deletes a saved view port configuration by supplying the particular name of the view port to be deleted.
Join option	—	it allows two adjacent view ports into a single view port by selecting first the dominant view port and then selecting the other view port. The dominant view port will inherit the second view port by merging both.
Single option	—	this allows to display a single view port, displaying the active configuration.
? option	—	it displays the number and co-ordinates of the current view port and the identification number and screen positions along with the names and screen positions of the saved view port configurations.
2 option	—	it allows the division of the current view port into equal parts, either horizontally or vertically, based on the choice.
3 option	—	it permits the division of the current view port into three ports.
4 option	—	it creates 4 windows of equal size.

21.12 CREATION OF 3D PRIMITIVES

From the basic 3D primitives more complex solids can be built. A few such simple solids are shown in Fig. 21.16.

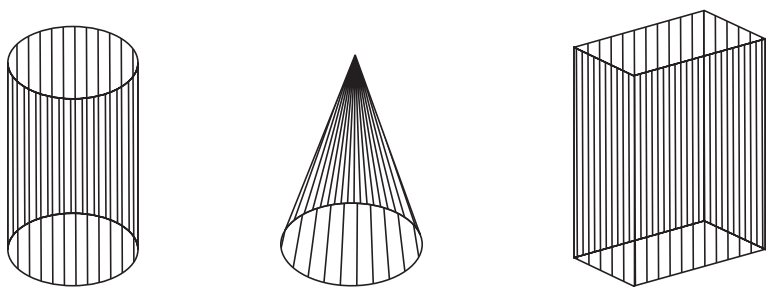

Fig. 21.16

21.12.1 To Draw a Cylinder

Cylinder offers several methods of drawing a 3D solid cylinder. The default is to choose a centre point, then pick or enter the diameter/radius and height.

Command: CYLINDER

1. Elliptical / <centre point> <0, 0, 0>: ↵ or pick a centre point
2. Diameter / <radius>: provide a diameter or radius by picking or entering
3. Centre of other end / <height>: pick a point or enter a value

Options:

Centre	—	allows to create a cylinder with a circular base.
Elliptical	—	allows to create a cylinder with an elliptical base.
Centre of other end	—	allows to specify top end of the cylinder.
Height	—	allows to specify the height of the cylinder.

www.EngineeringBooksPdf.com

21.12.2 To Draw Cone

Cone offers several methods for drawing a 3D solid cone. The default is to choose a centre point, then pick or enter the diameter/radius and apex.

Command: CONE

1. Elliptical /<centre point> <0, 0, 0): pick a centre point or enter E
2. Diameter / <radius>: provide a diameter or radius
3. Apex /<height>: provide the apex or height

Options:

Centre — allows to create a cone with a circular base.
Elliptical — allows to create a cone with an elliptical base.
Centre of other end — allows to specify top end of the cone.
Height — allows to specify the height of the cone.

21.12.3 To Draw a Box

The box command creates a 3D solid box.

Command: BOX

1. Centre/ <corner of box> <0, 0, 0>: pick up the first corner point for the box
2. Cube/length/ <other corner>: pick up a second corner point or enter a value
3. <Height>: provide the box height by picking two points or entering a value

Options:

Centre — allows to create a 3D box using a specified centre point.
Cube — allows to create a 3D box with all sides equal.
Length — allows to enter values for length, width and height.

21.13 CREATION OF COMPOSITE SOLIDS

Complex solids can be created from both solid primitives and swept solids. Boolean operations can be used to create composite solids from two or more solids. Solid modelling is a built-in facility with AutoCAD 14, which provides for region and solid modelling. Region models are two dimensional closed areas consisting of lines, polylines, arcs, circles and ellipses. From these, mass properties and surface areas can be assessed. Solid models are true shape 3D objects.

The region command allows creating 2D enclosed areas from existing overlapping closed shapes (loops).

21.13.1 To Create Regions

Command: REGION

1. Select objects: select objects to be combined into a region
2. Press: ↵

A composite region may be created by subtracting, combining or finding the intersection of regions.

To create composite regions (Fig. 21.17a, b):

Command: Union, Subtract and Intersect

1. Select objects: select the regions to be combined into a composite region
2. Press ↵ to end the command

www.EngineeringBooksPdf.com

Objects may be selected in any order to unite them with the union command and when it is required to subtract one region from the other, first select the region from which it is required to subtract. Condition: these regions exist overlapping, earlier to the operations.

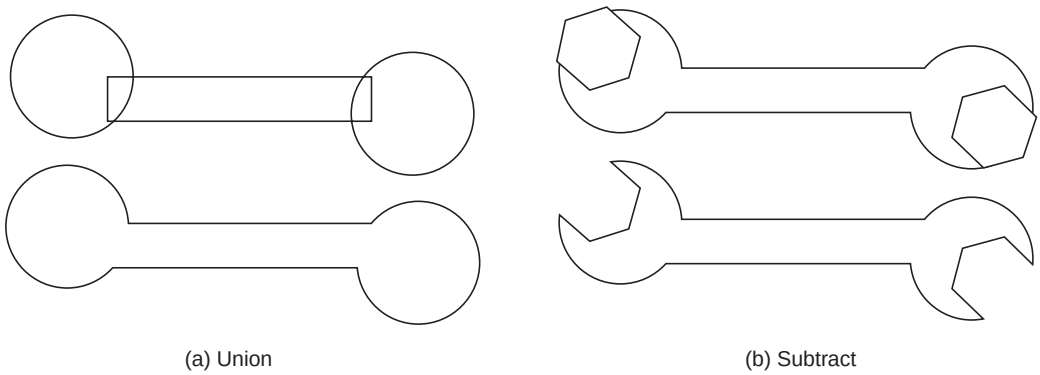

Fig. 21.17

21.13.2 Solid Modelling

A composite solid can be created from both solid primitives and swept solids or by extruding a 2D object, Boolean operations can be used.

Options:

Union — allows combining the volume of two or more solids into one. Select the objects to join and AutoCAD creates a single composite object.

Subtract — allows to remove the common area shared by two sets of solids. One must first select the solid from which to subtract and then the solid (s) which are to be subtracted.

Intersect — allows creating a composite solid that contains only the common volume of two or more overlapping solids.

21.13.3 Mass Property

Mass prop calculates and displays the mass properties of 2D and 3D objects. For solids, it provides volumetric information such as mass, volume, centre of gravity, principal axes and moments of inertia.

Command: MASS PROP

1. Select objects: pick the solid model (s) to be analysed. This will display all the properties of the object(s) on the screen
2. Write to a file <N>: if one wants the information written to a file, type Y and provide a file name.

For regions, the mass properties displayed are area, perimeter, centroid, moment of inertia, product of inertia and radius of gyration.

21.14 SECTIONAL VIEW

When a section plane cuts a part of the solid and the remaining part of the solid is projected, that view is known as sectional view. Sectional views are chosen to reveal the inner details (hidden). One may use full section, half section or off-set section to reveal the hidden details of the object

www.EngineeringBooksPdf.com

(refer Chapter 2 and section 2.6) and the sectioned zone in any view is shown by cross-hatched lines. Thin lines represent the cross-hatched lines. It is possible to change the hatching lines.

SOL VIEW uses orthographic projections with floating paper space view ports to layout multi-and sectional view drawings of 3D solids.

Command: SOLVIEW

UCS/ ORTHO/ AUXILIARY / SECTION/ <EXIT>:

By choosing the option section-use the original view port and specify two points at the prompts to define the section plane. Then define the viewing side by specifying a point on one side of the cutting plane, for the next prompt.

21.15 ISOMETRIC DRAWING

The command "isoplane" permits to switch the cursor orientation between the left, top and right isometric planes when the snap mode is set to the isometric style.

Command: ISOPLANE

Left /top/ right/ <toggle>: enter the choice to move to right, isoplane left or isoplane top. By pressing ctrl and E keys simultaneously, toggle takes place between the isometric planes.

21.15.1 Setting Isometric Grid and Snap

Use snap command for choosing between the standard orthogonal snap style and isometric snap style-by selecting style. The grid points are arranged along 30°, 90° and 150° lines. The distance between the grid lines is determined by the vertical spacing.

To draw the cube in isometric view (Fig. 21.18):

Command: isoplane-by choosing top, left and right planes, one at a time, the squares are drawn to complete the cube. Isometric circles are drawn using the command ellipse and selecting iso-circles option. This is possible when isometric snap is on.

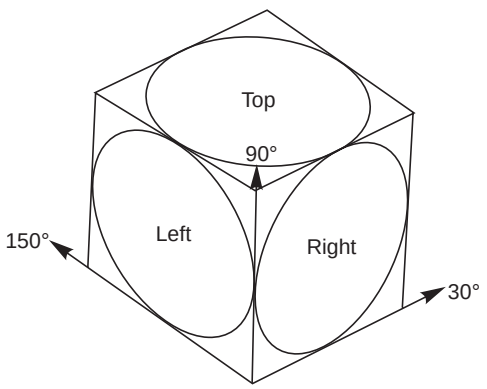

Fig. 21.18

21.16 BASIC DIMENSIONING

In many applications, a drawing should contain annotations showing lengths or distances or angles between objects to convey the desired information. Dimensioning is the process of adding these annotations to a drawing. AutoCAD provides four basic types of dimensioning; linear, angular, diameter and radius.

DIM and DIMI Commands—DIMI command allows executing one dimensioning command and then returns to the normal command mode. If several dimensioning commands are to be executed, DIM command should be used. In this mode, the normal set of AutoCAD commands is replaced by a special set of dimensioning commands. To end the process of dimensioning, EXIT command has to be used.

The dimensioning commands can be grouped into six categories:

1. Linear — is done with a horizontal, vertical, aligned and rotated command. However, rotated command requires specifying the dimension line angle explicitly.

www.EngineeringBooksPdf.com

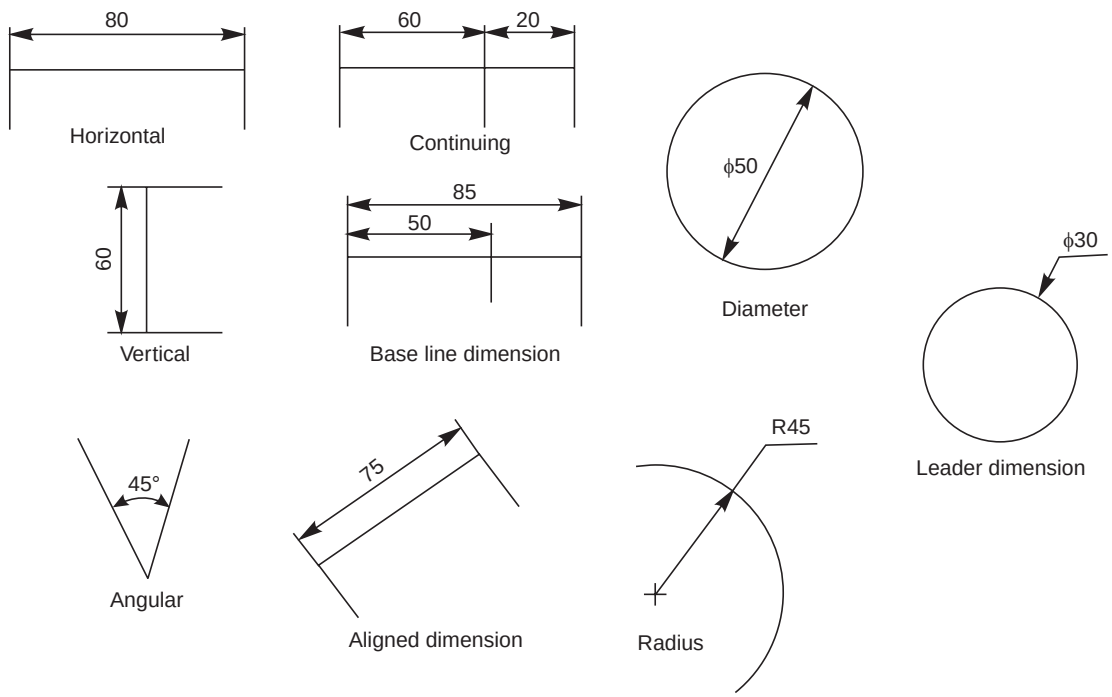

Fig. 21.19

2. Angular — is used to dimension angles. Here, one has to select two non-parallel lines to introduce the angular dimension.
3. Diameter — this can be invoked for dimensioning arcs and circles.
4. Radius — it is almost identical to diameter dimensioning, except that only a radius line is drawn. This line has only one arrow.
5. Associative — used to make various changes to associative dimension entities.
6. Dimensioning utility commands
   — to draw a centre line or centre mark for a circle/arc, this command is used.

AutoCAD generally uses same type of dimensions and dimension label components as standard draughting. Figure 21.19 gives examples of types of dimensions possible: linear, angular, diametric, radial and aligned. A number of variables such as extension lines, text location, tolerance specifications, arrow styles and sizes, etc., actually control the way in which the dimensions may appear in the drawings.

21.16.1 Dimensioning Fundamentals

The student is already exposed to some definitions of fundamentals. However, the following are specific for AutoCAD: (*i*) Base line dimension-a series of dimension lines, all starting at the same extension line, that measure successive linear distances. (*ii*) Continuing dimension—a series of dimension lines that follow one another along successive linear distances.

21.16.2 Dimensioning Methods

The procedure to be followed for dimensioning in AutoCAD is as follows:

www.EngineeringBooksPdf.com

1. Set-up the basic parameters for dimensioning. They are,
   (*a*) arrow head size,
   (*b*) arrow head type,
   (*c*) extension line offset, and
   (*d*) placement of dimension text.
2. Identify what to measure–pick the end points, lines, arcs or circles or other points of existing drawing entities using OSNAP if neccessary.
3. Specify where the dimension line and text are to be located.
4. Approve AutoCAD's measurements or can type one's own text.

21.16.3 Linear Dimensions

Command: DIM

Dim: hor/ver/ali/cont/ang/diam/rad/leader
Chose any one based on the requirement (Fig. 21.19)
First extension line origin or return to select: ↵
Select line, arc, or circle: pick
Dimension line location: pick
Dimension text <value>: ↵
Dim: exit

21.16.4 Continuing Linear Dimensions

Often a series of related dimensions must be drawn, sometimes several dimensions are measured from the same base line; other times one long dimension is broken into shorter segments that add upto the total measurement. The base line and continue commands are provided to simplify these operations. Draw the first dimension, using horizontal, vertical, aligned or rotated commands. Then enter base line or continue. AutoCAD proceeds directly to the "second extension line origin" prompt, and then asks for the dimension text. The dimension line is placed at the same angle as the previous dimension.

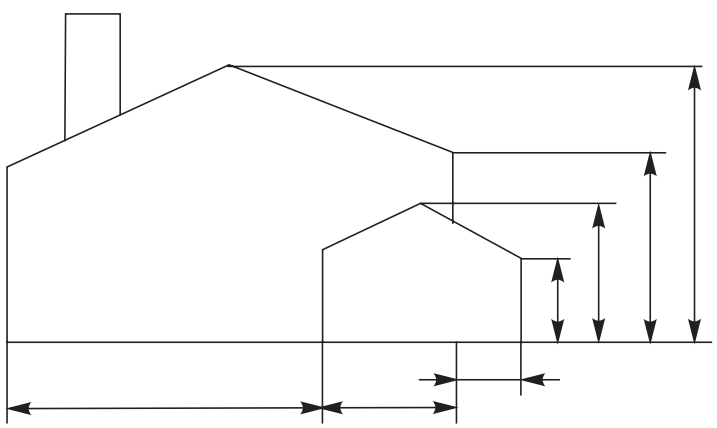

Fig. 21.20

When the base line command is used, AutoCAD offsets each new dimension line by an amount to avoid overlaying the previous dimension line. The first dimension line is extended

www.EngineeringBooksPdf.com

accordingly. Dimension line off-setting can also occur with the continue command if either the new or previous dimension has its arrows outside the extension lines. In Fig. 21.20, the horizontal; dimensions are drawn using continue command and the vertical dimensions are drawn using base line command.

21.16.5 Example for Dimensioning

For the example considered, (Fig. 21.21), the method of dimensioning with the associated dialogue with AutoCAD is given below, in the same serial order:

1. Command: dim linear
   First extension line origin or return to select:—int of
   Second extension line origin:—cen of
   Dimension line location (text/angle/horizontal/vertical/rotated): pick
   Dimension text <130>:
2. Dim: base
   Second extension line origin: — cen of
   dimension text <260>:
3. Command: dim linear
   First extension line origin or return to select:— int of
   Second extension line origin: — cen of
   Dimension line location (text/angle/horizontal/vertical/rotated): pick
   Dimension text <25>:
4. Dim: vertical
   First extension line origin or return to select: — int of
   Second extension line origin: —cen of
   Dimension line location (text/angle/horizontal/vertical/rotated): pick
   Dimension text <20>:
5. Dim: base
   Second extension line origin: — cen of
   Dimension text <75>:
6. Dim: base
   Second extension line origin: — int of
   Dimension text <150>:
7. Dim: Horizontal
   First extension line origin or return to select: pick
   Second extension line origin: pick
   Dimension line location (text/angle/horizontal/vertical/rotated): pick
   Dimension text <120>:
8. Dim: Vertical
   First extension line origin or return to select: pick
   Second extension line origin: pick
   Dimension line location (text/angle/horizontal/vertical/rotated): pick
   Dimension text <80>:

www.EngineeringBooksPdf.com

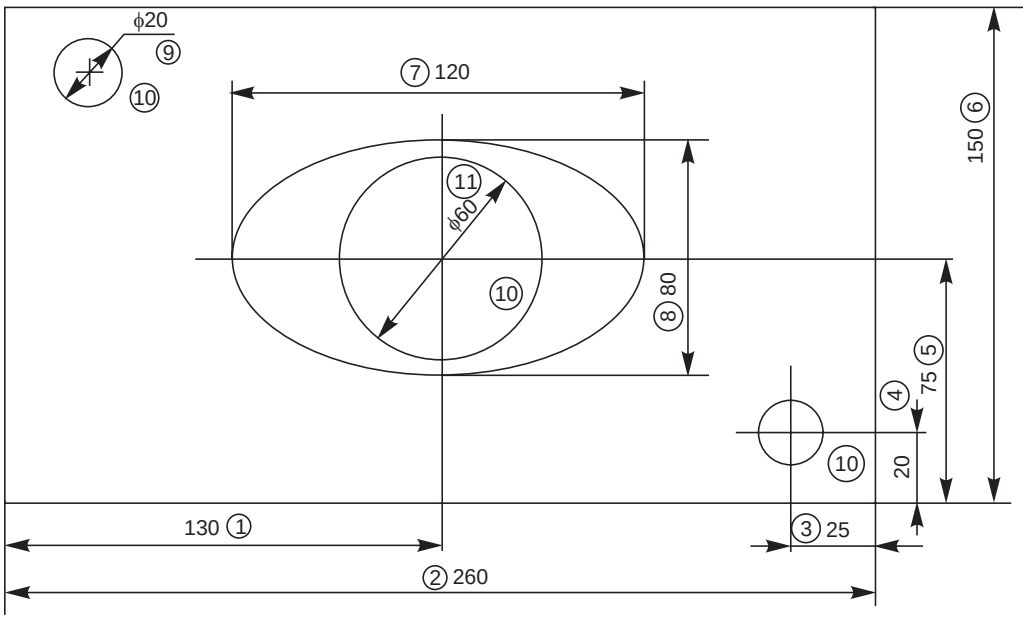

Fig. 21.21

9. Dim: leader
   Leader start: pick
   To point: pick
   To point: ↵
   Dimension text <20>: ϕ20
   Dim: exit
10. Command: Dim
   Select arc or circle: pick
   Select arc or circle; pick
   Select arc or circle: pick
   Select arc or circle: ↵
11. Dim: diameter
   Select arc or circle: pick
   Dimension text <60>: ϕ60

21.17 POLYLINE (PLINE)

Polyline is basically a composite curve which is a combination of linear and arc segments in AutoCAD. The other property that can be varied is the thickness of the line drawn. Special properties of the polyline are:

(*a*) All the connected segments are treated as single entity.

(*b*) Width of line of any or all segments can be varied.

(*c*) It can also be a closed curve.

(*d*) Line type can be varied as required along various segments of the line.

www.EngineeringBooksPdf.com

Command: PLINE

Front point: 15, 25 (starting point). Once the starting point is selected, the computer will indicate current line width; 0,0 (default value)

When entered, the prompt responds:

Arc/Close/Half width/Length/Undo/Widt/<end point of line>:

By choosing (Fig. 21.22):

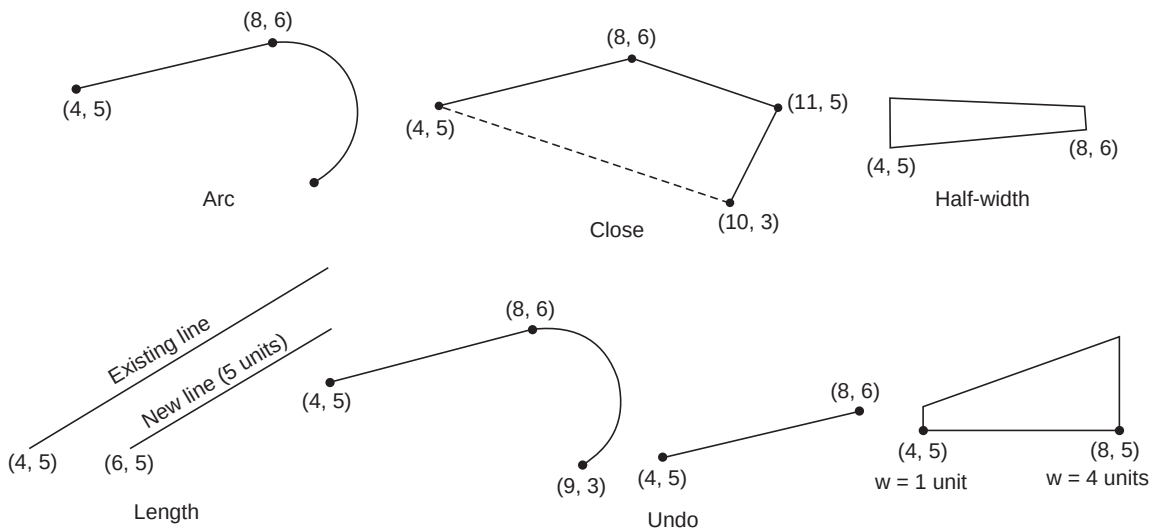

Fig. 21.22

Arc	—	one can draw an arc with proper choice or selection
Close	—	from the present position, the line joins with the starting point
Half width	—	in case the starting width is chosen earlier; from this point, the width of the line will be half of it
Length	—	length of the line may be given or co-ordinates may be given to draw the line
Undo	—	the previous operation is reversed
Width	—	one can specify the width at this point and also have a tapered line drawn by suitably instructing both starting width and ending width
<End of line>	—	(default) by just entering, PLINE stops at the above point

NOTE PLINE may be used similar to LINE command with added advantages.

21.18 OFFSET

Features: 1. Creates an object parallel to and at a specified distance

2. Draw parallel lines, concentric circles, arcs, etc (Fig. 21.23).

The response of the computer to the command:

Command: OFFSET

Offset distance or through <current>:

By choosing the option offset distance.

www.EngineeringBooksPdf.com

1. Offset distance: a value is to be given
2. Select the object: select by mouse
3. Side to offset: select the side on which one needs the offset
4. Select the object: enter to stop the selection process

By choosing through option,

1. Enter T
2. Select object : pick the object
3. Through point: pick the point
4. Select object: enter to stop the selection process

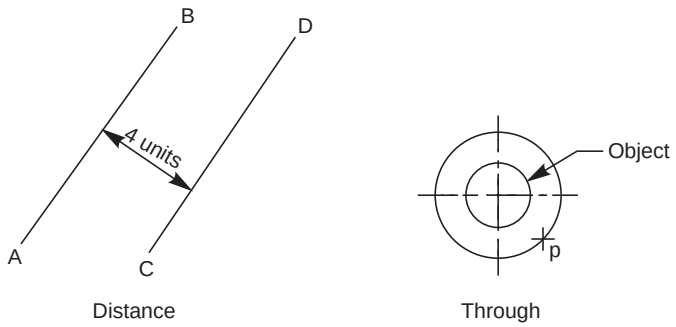

Fig. 21.23

Observations: 1. Multiple creations of objects are made easy by selecting the offset distance or through point
2. Mirror images also are possible

21.19 ELEVATION AND THICKNESS

Features: 1. The command is used to create different objects.
2. By suitably selecting a view point, 3D drawings can be created in AutoCAD (Fig. 21.24).

Command: ELEV

New current elevation<current>: 0 or any value may be entered

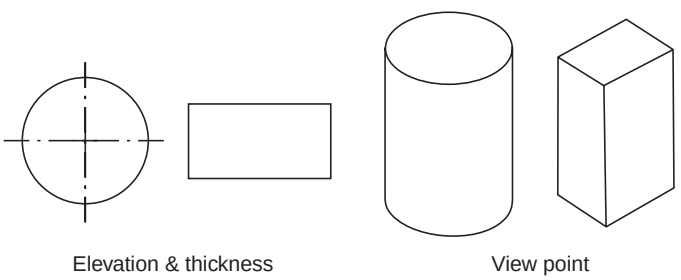

Fig. 21.24

New current thickness <current>: 20. This is the value available and it can be changed. Create an object (top view) say, circle, using circle command and change thickness/elevation or both for the next object.

www.EngineeringBooksPdf.com

Command: ELEV

New current elevation<0>: 10 enter

New current thickness<20>: 40 enter

Now, draw a rectangle using RECTANG command and use view points suitable to create 3D shapes of the objects, *eg*., a cylinder at 0 elevation having thickness 20 units and a rectangular prism at 10 units of elevation and 40 units thickness.

21.20 CHANGE PROP

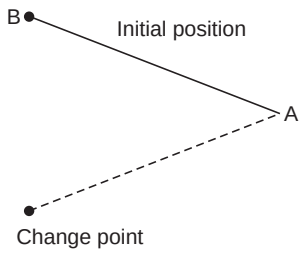

Features:
1. Changes length, colour or type of a line,
2. Changes the layer in which the entity is drawn,
3. Changes the elevation of component, and
4. Both properties and change point options are available.

Command: CHANGE (Fig. 21.25)

Select objects: pick the objects

Select objects: enter to stop the selection process

Properties: <change point>

By choosing properties option: P— enter

Change what property ? (Colour/Elev/Layer/L type/ Its scale/Thickness):

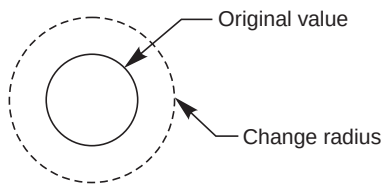

Fig. 21.25

By choosing,

Colour	—	New colour by layer: choose any colour
Elev	—	the elevation of the object chosen can be changed
Layer	—	Layer of the object can be changed
Thickness	—	New thickness values may be assigned
L type	—	line type of the objects chosen can be changed

By choosing point option:

The end point of a line or size of the circle can be changed.

21.21 EXTRUSION

Features: A plane surface is extruded or converted to 3D drawing by applying thickness to it, eg., circle growing into a cylinder or a polygon grows as a prism, etc. Straight/parallel extrusions or extrusions with taper are also possible.

NOTE: A 3D drawing may also be created by choosing the command.

ELEV: and choosing a suitable view point

The response of the computer to this command is given below:

Command: EXTRUDE (Fig. 21.26)

Select objects: make selection

Select objects: enter to stop the process of selection

Path/height of extrusion <0>: 15 choose a value

www.EngineeringBooksPdf.com

Extrusion taper angle <0>: by default or choose a value

Now, select a suitable view point for 3D images of the chosen objects.

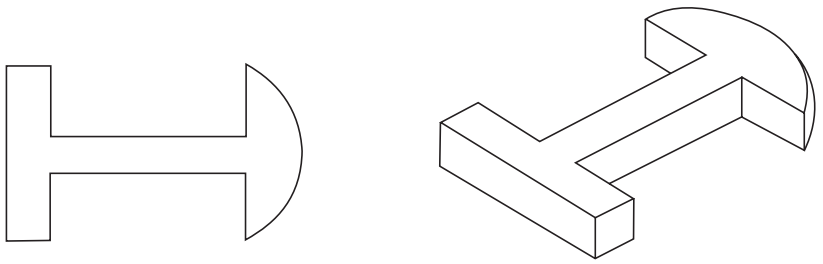

Fig. 21.26

OBJECTIVE QUESTIONS

1. What is CAD?
2. Graphics can be converted into hard copy with a _____
3. What is Graphic's package?
4. Computer aided graphics systems have 3 major components. What are they ?
5. What is digitizer?
6. What are the applications of locators and selectors?
7. Two example of single user operating systems are _____ and _____.
8. Two examples of multi-user operating systems are _____ and _____.
9. DOS is used on _____ computers.
10. Two types of DOS commands are_____ and _____.
11. What do you understand by drawing limits and extents?
12. What is layering concept?
13. How do you begin a new drawing?
14. How do you select an existing drawing for editing?
15. How to exit from AutoCAD?
16. Zooming shrinks the drawing. (True / False)
17. Panning changes the magnification of the drawing.(True / False)
18. Use of editing facilities of AutoCad:_____ _____ _____
19. AutoCAD editor screen has_____areas. What are they?
20. What is a status line?
21. In AutoCAD 14 _____ _____ helps to set-up a drawing.
22. In release 14,_____ provide introduction to the methods for starting a new drawing.
23. _____command constrains the lines drawn horizontal and vertical directions only.
24. _____command sets increments for cursor movements.
25. Grid command helps the user by _____ _____ _____.

www.EngineeringBooksPdf.com

26. Help can be obtained by _____ command.
27. _____ command saves the work.
28. List 4 important options of zoom command.
29. Object selection is achieved by _____ and_____
30. List 5 important edit commands and mention their applications.
31. List the utility commands.
32. Differentiate between DIM and DIMI commands.
33. List the categories of dimensioning commands.
34. Distinguish between Normal, Outer-most and Ignore styles of hatch command.
35. When do you use PLOT and PRPLOT commands?
36. Explain how a line can be drawn by (*i*) Cartesian coordinate method. (*ii*) Incremental form and (*iii*) Polar coordinate form.
37. How to draw an ellipse? Explain.
38. Give the procedure for describing a polygon of 7 sides of side 30 mm.
39. What are the various modelling techniques on ACAD?
40. What do you understand by VPOINT command?
41. What is VIEW PORTS?
42. What are the options available on VIEWPORTS command?
43. Which option is chosen to know the number and co-ordinates of current view port?
44. How do you draw a cylinder, cone and box?
45. What are the applications of primitives?
46. When do you choose the command PLINE?
47. What is the response of a computer for the command OFFSET?
48. What are the features of the command Elev and thickness?
49. Explain the features of CHANGE PROP command.
50. What do you achieve by EXTRUSION command?
51. List the various options available to draw an arc.
52. What are the options available to draw a circle?
53. Distinguish between 2 point and 3 point option of drawing a circle.
54. List the various Boolean operations that may be performed on a computer.
55. _____ operations can be used to create composite solids.
56. Region command allows _____ _____ _____ _____
57. _____ allows to combine the volume of two or more solids into one.
58. _____ allows to remove common area shared by two sets of solids.
59. Intersect allows to create a composite solid that contains only _____ _____
60. Mass prop provides _____ _____ for solid.
61. Mass prop displays _____ _____ for regions.
62. Solview command provides _____ _____ _____ _____ _____ _____
63. Explain the functions of the command Isoplane.
64. Explain the various dimensioning methods of AutoCAD.
65. Distinguish between base line and continue commands.

www.EngineeringBooksPdf.com

66. List the various options available for the command DIM.
67. Describe how do you make centre lines for an arc or circle.
68. Solid modelling can be created by _____ a 2D object.
69. _____ models are true shape 3D objects.
70. Describe the responses of a computer for the command RECTANG.

ANSWER

2. Plotter/printer
4. (*a*) draughter, (*b*) hardware and (*c*) software
7. MS-DOS, MS-Windows 95
8. UNIX, LINUX
9. personal
10. internal, external
16. True
17. False
19. four
21. Use Wizard
22. instructions
23. ORTHO
24. SNAP
25. creating reference lines
26. HELP
27. SAVE
29. Pick box, Window option
55. Boolean
56. to create 2D enclosed areas
57. Union
58. Subtract
59. common volume of two or more overlapping solids.
60. volumetric information
61. area properties
62. multi and sectional view drawings
68. extruding
69. Solid

www.EngineeringBooksPdf.com

Objective Questions

Choose the correct answer or fill in the blanks, for the objective questions given below:

CHAPTER 1

1. Production drawing is also called _____.
   (*a*) Machine drawing (*b*) Working drawing
2. _____drawing is useful to know the overall dimensions of the assembled unit.
   (*a*) Schematic (*b*) Catalogue
3. Instruction manual drawing helps in _____.
   (*a*) Making spares (*b*) Location of parts
4. Machine shop drawing is provided with_____.
   (*a*) Actual dimensions (*b*) Dimensions with machining allowances
5. Exploded assembly drawing represents _____ .
   (*a*) Position of parts in the sequence of assembly
   (*b*) Assembly drawing

CHAPTER 2

1. The drawing sheet nearer to foolscape paper is _____ .
   (*a*) A4 (*b*) A0
2. Only _____ method of projection is recommended by BIS.
   (*a*) First angle (*b*) Third angle
3. As far as possible dimensions should be placed _____ the view of the drawing.
   (*a*) Outside (*b*) Inside
4. Dimension line _____ be used as extension line.
   (*a*) Should (*b*) Should not
5. Projection and dimension lines are drawn as _____ lines.
   (*a*) Thick (*b*) Thin
6. When several arcs of same size are dimensioned _____ leaders are used.
   (*a*) Separate (*b*) Extended
7. A radius of 25 mm is indicated on the drawing as _____ .
   (*a*) R 25 (*b*) 25R.
8. In aligned and uni-directional method of dimensioning, horizontal dimension line is _____ for placing the dimension.
   (*a*) Broken (*b*) Not broken
9. Hatching lines are drawn at an angle of _____ to the axis or to the main outline of the sections.
   (*a*) 60° (*b*) 45° (*c*) 30°

www.EngineeringBooksPdf.com

10. The size of the letters must be constant irrespective of the size of the drawing (True/False).
11. The centre line should end at the outline of the drawing (True/False).
12. Dimensions may be marked from hidden lines (True/False).
13. Extension lines should end at the dimension line (True/False).
14. Dimension lines should not cross each other (True/False).
15. Centre lines are drawn in thick lines (True/False).
16. Leader lines are drawn in thick lines (True/False).
17. While drawing hidden lines, begin with a dash, not with a space (True/False).
18. Invisible arcs begin with a space (True/False).
19. Invisible small arcs may be made solid (True/False).
20. Two axes intersect at short dashes (True/False).
21. Leader line terminating within the outline of an object is indicated by a dot (True/False)
22. The thickness of the line of a letter with 14 mm height in B type lettering is 1 mm (True/False).
23. Hatching is interrupted for dimensioning (True/False).
24. Cutting plane is shown as thick continuous line (True/False).
25. The smallest drawing sheet is designated as _____ .
26. As per the latest BIS, SP:46-1988, _____ method of projection is to be used for drawing.
27. The standard size of title block is _____.
28. Each feature shall be dimensioned _____ only on a drawing.
29. As far as possible dimensions should be expressed in _____ unit only.
30. Dimensions should be taken from _____ lines.
31. _____ of projection lines and dimension lines should be avoided.
32. Where space is limited, arrow heads are replaced by _____ .
33. Dimension lines, leader lines, projection lines and hatching lines are drawn as _____ lines.
34. Centre lines are drawn as _____ .
35. Visible lines and edges are drawn as _____ .
36. The inclination of inclined lettering is _____ to the horizontal.
37. Hidden lines are represented by _____ lines.
38. Sectioned portion is represented by _____ lines.
39. The length and width ratio of arrow head is _____ .
40. Leader lines should be inclined to the horizontal at an angle greater than _____ degrees.
41. In aligned dimensioning, the dimension is placed _____ the dimension line.
42. For non-horizontal dimension, the dimension line is broken for _____ dimensioning method.
43. In aligned dimensioning, dimensions for non-horizontal lines are placed _____ the dimension line.
44. A _____ is placed below the dimension, when it is out of scale.
45. In a situation where the dimensions are crowded, they should be shown as _____.
46. Dimension notes are written in _____ letters and as per _____ abbreviations.
47. The abbreviation SF stands for _____.

www.EngineeringBooksPdf.com

48. The expansion of U/C is _____.

49. The material abbreviation CS stands for _____.

50. The material abbreviation CrS stands for _____ .

51. Explain the meaning of the following abbreviations:

(*a*) A/C (*b*) CYL (*c*) DIA and ϕ
(*d*) EQUIP-SP (*e*) HEX (*f*) MATL
(*g*) PCD (*h*) R and RAD (*i*) TOL

52. Give the standard abbreviations for the following:

(*a*) Counter sink (*b*) Diametral pitch (*c*) Ground
(*d*) Nominal (*e*) Number (*f*) Spot facing
(*g*) Square (*h*) Screw

53. Provide standard abbreviations for the following:

(*a*) Cast steel (*b*) Forged steel (*c*) Grey iron
(*d*) High carbon steel (*e*) Structural steel (*f*) Brass

54. Identify the materials with the following abbreviations:

(*a*) CI (*b*) HSS (*c*) Spring S (*d*) GM
(*e*) WI (*f*) GI (*g*) MS

55. Explain the meaning of the following notes:

(*a*) DIA 30 DEEP 25 (*b*) KEYWAY, WIDE 8 DEEP 4
(*c*) U/C, WIDE 10 DEEP 5 (*d*) NECK, WIDE 4 DEEP 2
(*e*) MORSE No.2 (*f*) 10 ACME THD

56. Write the notes to the following instructions:

(*a*) Drill a through hole of diameter 15 mm and counter sunk to get 20 mm diameter on top.
(*b*) Drill through hole of diameter 15 mm counter bored to a depth of 6 mm with a diameter 20 mm ; the number of such holes being six.
(*c*) Drill a through hole of diameter 13 and counter bore to insert a socket headed cap screws of 12 mm nominal diameter, eight holes are to be made equi-spaced on the circle.
(*d*) Cut a key seat of 8 mm width and 6 mm deep.
(*e*) Make a diamond knurl with 1mm pitch and end chamfer of 45°.
(*f*) Carburise, harden and ground.

CHAPTER 3

1. In the orthographic projection, the projectors are _____ to the plane of projection.

(*a*) Parallel (*b*) Perpendicular (*c*) Inclined

2. To draw a side view, an auxiliary vertical plane is imagined to be placed _____ .

(*a*) Perpendicular to both H.P and V.P.
(*b*) Perpendicular to H.P and parallel to V.P.
(*c*) Perpendicular to V.P and parallel to H.P.

3. The number of mutually perpendicular planes that may surround an object in space is _____ .

(*a*) Four (*b*) Three (*c*) Six

www.EngineeringBooksPdf.com

4. In the third angle projection, the object is imagined to be placed _____ .
   (*a*) Below H.P and behind V.P. (*b*) Above H.P and infront of V.P.
   (*c*) Above H.P and behind V.P.
5. In the first angle projection, the view obtained on the auxiliary vertical plane (AVP) placed to the right of the object is called _____ .
   (*a*) View from the left (*b*) View from the right
   (*c*) View from below.
6. In the third angle projection, to obtain the view from left, the AVP is assumed to be on the _____ of the object.
   (*a*) Right side (*b*) Left side (*c*) Top.
7. In _____ _____ projection, any view is so placed that it represents the side of the object away from it.
8. In _____ _____ projection, any view is so placed that it represents the side of the object nearer to it.
9. A surface of an object appears in its true shape when it is _____ to the plane of projection.
10. The view from above of an object is obtained as a projection on the _____ plane by looking the object normal to its _____ surface.
11. The view from the front of an object is obtained as a projection on the _____ plane by looking the object _____ to its front surface.
12. In first angle projection:
    (*a*) The view from above is _____ the view from the front.
    (*b*) The view from the right is placed on the _____ _____ of the view from the front.
13. In the third angle projection :
    (*a*) The view from above is _____ the view from the front.
    (*b*) The view from the left is placed on the _____ of the view from the _____ .
14. The side view of an object is obtained as a projection on the _____ plane by looking the object _____ to its _____ surface.
15. The number of views required for an object depends on its _____ .
16. In the first angle projection, the object is positioned in-between the observer and the plane of projection (True/False).
17. In the third angle projection, the object is positioned in-between the observer and the plane of projection (True/False).
18. In both the methods of projection, the views are identical in shape and detail (True/False).
19. The location of different views w.r.t. the view from the front is different in both the methods of projection (True/False).
20. In the first angle projection, the object is imagined to be placed above the H.P and behind V.P (True/False).

CHAPTER 4

1. Sectional views reveal _____ .
   (*a*) Inner details (*b*) External features
   (*c*) Overall size of the object

www.EngineeringBooksPdf.com

2. To obtain full section, _____ _____ of the object is imagined to be removed.
   (*a*) One fourth (*b*) One third (*c*) One half
3. In half sectional view, _____ _____ of the object is imagined to be removed.
   (*a*) One half (*b*) One fourth (*c*) One third
4. _____ and _____ should not be shown in section.
   (*a*) Web (*b*) Key
   (*c*) Shaft along axis (*d*) Shaft across the axis
5. Pulley arms are shown as revolved sections (True/False).
6. Rivet sectioned across is not hatched (True/False).
7. Rivet sectioned along the length is hatched (True/False).
8. Fasterners are not hatched in longitudinal sections (True/False).
9. In drawing, sectioned view of a right hand internal thread appears as left hand thread (True/False).

CHAPTER 5

1. A thread is specified by _____ _____ and _____.
2. _____ is the distance measured parallel to the axis between corresponding points on adjacent threads.
3. _____ is the distance the screw advances axially in one turn.
4. Pitch and lead are equal in _____ _____ threads, however it is not the same in _____ threads.
5. _____ thread is used in brass pipe work.
6. _____ thread profile has rounded ends.
7. For transmitting power in one direction _____ thread is used.
8. _____ thread is used for transmitting high power.
9. _____ thread is stronger than square thread.
10. _____ thread is used in the screw Jack.
11. _____ thread is used on the lead screw of a lathe.
12. _____ thread is used on the shaft for transmitting power to worm wheels.
13. _____ is the included angle of ISO metric screw thread.
14. In the metric screw thread, basic profile is rounded at the _____ diameter of external thread and _____ diameter or internal thread.
15. In double start threads, pitch is equal to _____ of lead.
16. Threads are specified as coarse or fine based on _____ value.
17. In conventional representation of threads, the root diameter is represented by _____ _____ circle.
18. Both left and right hand threads are used in _____ _____.
19. For coarse thread, there is only one standard pitch (True/False).
20. The size across flats in a hexagonal nut is _____.
    (*a*) 1.5D (*b*) 0.9D (*c*) 1.5D + 3 (*d*) 1.2D
21. The angle of a metric thread is _____.
    (*a*) 55° (*b*) 45° (*c*) 47 1/2° (*d*) 60°

www.EngineeringBooksPdf.com

22. The angle of an ACME thread is _____ degrees.
(*a*) 48 (*b*) 90 (*c*) 29 (*d*) 45

23. The distance across corners of a hexagonal nut is equal to _____.
(*a*) 2D (*b*) 1.5D (*c*) 1.2D

24. The angle of worm thread is _____ degrees.
(*a*) 45 (*b*) 29 (*c*) 55

25. The angle of a buttress thread is _____ degrees.
(*a*) 90 (*b*) 50 (*c*) 45 (*d*) 29

26. In conventional representation of external thread in section, the hatching is extended upto the core diameter (True/False).

27. In conventional representation of internal thread in section, the hatching is extended upto the root (major) diameter (True/False).

28. The height of hexagonal nut is _____.
(*a*) D (*b*) 1.1D (*c*) 1.3D

29. In conventional sectioned representation of threads in engagement, hatching is extended upto core diameter of the bolt and its nominal diameter is shown as continuous line (True/False).

30. A washer is used for adjusting the height of the bolt (True/False).

31. _____ neck is used to prevent the rotation of the bolt.

32. _____ bolt is used for lifting heavy machinery.

33. Stud bolt has threads to full length (True/False).

34. The thickness of locknut is more than the standard nut (True/False).

35. _____ nut is used to protect the bolt end from damages.

36. A screw has threads to full length (True/False).

37. A bolt has threads to full length (True/False).

38. Cap screws are smaller in size when compared to machine screws (True/False).

39. _____ is used to tighten socket headed screws.

40. Set-screws are used only for transmitting very light loads (True/False).

41. Grub screw is a cap screw (True/False).

42. _____ locknut is used in automobile works.

43. A spring washer is used to adjust the height of the nut (True/False).

44. _____ foundation bolt is common and simple.

45. _____ is used in Lewis foundation bolt.

46. _____ is used in cotter foundation bolt.

CHAPTER 6

1. A key is a temporary joint (True/False).

2. A cotter is a permanent joint (True/False).

3. Pin joints may be temporary or permanent joints (True/False).

4. The standard taper on the face of a key is _____.

5. Taper sunk key is tapered on both sides (True/False).

6. Saddle keys are used for light duties (True/False).

www.EngineeringBooksPdf.com

7. Sunk keys are used for light duties (True/False).
8. Woodruff key is a type of sunk key (True/False).
9. Feather key is a sunk key with uniform width and thickness (True/False).
10. Feather keys are used with _____.
    (*a*) Gears (*b*) Flywheel (*c*) Pulleys.
11. _____ fit exists between feather key and keyway.
12. A knuckle joint is a _____ joint used to fasten two circular rods.
13. Knuckle joints are used in _____ links.
14. A cotter of rectangular cross-sections has uniform thickness/width, however it is varying in width/thickness.
15. A cotter joint with a jib is used to join two circular rods (True/False).
16. Pin joints fasten two rods under axial loads (True/False).
17. A knuckle joint is used to fasten two square rods (True/False).

CHAPTER 7

1. Rigid couplings are used for shafts which are _____.
   (*a*) Slightly mis-aligned (*b*) Inclined (*c*) Co-axial
2. In a butt or half-lap coupling, the sleeve is normally fitted to the shafts by means of _____ _____.
   (*a*) Saddle key (*b*) Feather key (*c*) tight fit
3. In split-muff couplings, the number of bolts will always be _____.
   (*a*) Even (*b*) Four (*c*) Odd
4. In the solid flanged couplings, the flange is _____.
   (*a*) Separate, mounted using a sunk key
   (*b*) Integral with the shaft
   (*c*) Fitted with interference fit
5. In flanged coupling, the flanges are joined together by means of _____.
   (*a*) Hex. headed bolts (*b*) Headless taper bolts (*c*) Key
6. In solid flanged coupling, the flanges are joined by means of _____.
   (*a*) Hex. headed bolts (*b*) Headless taper bolts (*c*) Cotter pin
7. For ensuring correct alignment; in flanged coupling _____ is provided.
8. A coupling is called protected flanged coupling because _ _ _ _ _ .
9. Shaft couplings are permanent in nature (True/False).
10. Shaft couplings are used only to take axial loads (True/False).
11. A universal coupling connects two shafts, only when the angle between them is very small (True/False).
12. An Oldham coupling connects two shafts, when they are _____.
    (*a*) Intersecting (*b*) Parallel (*c*) Coaxial
13. The inevitable bearing wear is taken care of in _____ _____ .
    (*a*) Rigid couplings (*b*) Dis-engaging couplings (*c*) Flexible couplings
14. Relative rotation between the shafts in bushed-pin type flanged coupling is taken care of by _____ _____.

www.EngineeringBooksPdf.com

15. Mis-alignment of shafts in compression coupling is taken care of by _____ _____ _____ .

17. When the power transmission from one shaft to another is intermittent, _____ coupling is used.

18. The power is transmitted in cone coupling by _____, whereas in claw coupling, by _____.

19. Non-aligned couplings are used to transmit power between two shafts which are _____ _____ .

20. Non-aligned _____ coupling is recommended for connecting intersecting shafts.

21. Oldham coupling is recommended to connect two _____ shafts.

22. Flexibility in cushion coupling is provided by _____ _____ .

CHAPTER 8

1. In joints for CI pipes, the flanges are not integral with the pipe lines (True/False).

2. Socket and spigot joints are used for connecting underground pipe lines (True/False).

3. For high pressure application, the pipe is strengthened by _ _ _ _ _ .

4. For larger diameter pipes, the flanges are strengthened by _____.

5. In copper pipes, flanges are _____.

(*a*) Integral with pipe (*b*) Brazed to the pipe (*c*) Keyed to the pipe

6. For solid drawn WI or steel pipes, the flanges are _____.

(*a*) Screwed (*b*) Keyed (*c*) Brazed

7. _____ _____ joint is used on pipes which can not be connected using a coupler.

8. _____ _____ facilitates making and breaking of the joints, without disturbing the pipe layout.

9. _____joints are used to accomodate expansion or contraction due to variation of fluid temperature.

10. _ _ _ _ _ is placed between two pipes to act as expansion joint.

11. _____ packing prevents the leakage in stuffing boxes.

12. When expansion joint is used, the pipes are _____.

(*a*) Rigidly clamped (*b*) Supported on rollers

13. Elbows, Tees and crosses are used to connect or branch-off the pipes at _____ _____ .

14. _____ _____ is used to connect two pipes of different diameter.

15. _____ is used to close the end of a pipe.

16. _____ is a small pipe, threaded throughout on the outside.

17. With reference to pipe fitting, MTA stands for _____ _____ _____ .

18. With reference to pipe fitting, FTA stands for _____ _____ _____.

19. _____ is used to connect a PVC pipe line to a metal pipe.

20. _____ is used to connect metal pipe and all types of valves, etc.

21. _____ is the equivalent PVC pipe for half inch GI pipe.

22. 50 mm is the equivalent PVC pipe for _____ GI pipe.

23. PVC pipes are joined by _____ cement.

www.EngineeringBooksPdf.com

CHAPTER 9

1. _____ pulley is used to mount at an intermediate location on a shaft.
2. Pulleys are mounted on shafts by _____keys.
3. Pulley with grooves is used with _____ belts.
4. Step cone pulleys are mounted on driver and driven shafts in _____ directions.
5. Different belts are used on the pairs of steps of cone pulleys (True/False).
6. When a number of machines are operated from a single power source, each one is provided with a _____ _____ _____ pulley arrangement.
7. _____ belts are preferred when shafts are nearer to each other.
8. _____ belts are used when centre distance between two shafts is more.
9. Loose pulley is used to transmit the power (True/False).
10. Diameter of the loose pulley is slightly less than that of the fast pulley (True/False).
11. _____ cause less pull on the shaft for the same amount of power transmission.
12. _____ is used for transmission of power over large distances.

CHAPTER 10

1. Riveted joints are permanent joints (True/False).
2. _____ and _____ is done to make the riveted joint air tight.
3. Width of the fullering tool is _____ _____ width of the bevelled edges of the plate.
   (*a*) equal to (*b*) less than (*c*) greater than
4. Width of the caulking tool is _____ _____ width of the bevelled edges of the plate.
   (*a*) equal to (*b*) less than (*c*) greater than
5. In chain riveting, adjacent rows are placed directly opposite to each other (True/False).
6. In zig-zag riveting, the rivets in adjacent rows are placed directly opposite to each other (True/False).
7. _____ is the distance from the edge of the plate to the centre of the nearest rivet.
8. Pitch is the distance between the centres of the adjacent rivets in the same row (True/False).
9. The distance between the centre of a rivet in a row to the next rivet in the adjacent row in zig-zag riveting is called _____ .
10. Lap joints are classified based on number of rows of rivets (True/False).
11. The cover plate in a butt joint is called _____ .
12. The plates are bevelled in _____ joint.
13. The two plates are square in _____ joint.
14. Straps are bevelled (True/False).
15. _____ joints are used for joining thick plates.
16. In single strap butt joint, the thickness of the strap is _____ than the main plate.
17. In double strap butt joint, the thickness of the straps is _____ than the main plate.
18. Two cover plates are used in making a lap joint (True/False).
19. Riveting produces a _____ joint.
    (*a*) Flexible (*b*) rigid (*c*) dis-engaging type.

www.EngineeringBooksPdf.com

CHAPTER 11

1. Welding produces a _____ joint.
   (*a*) Temporary (*b*)Permanent
2. A circle at the elbow of the welding symbol indicates _____.
3. Welding on site is indicated by _____ at the elbow.
4. In the process of welding, SAW stands for _____ _____ _____.
5. Welding symbol on the continuous line represents _ _ _ _ _ .
6. Welding symbol placed on the dashed line represents _ _ _ _ _ .
7. Length of the weld is indicated on the _____ side of the weld symbol.
8. _____ is the welding symbol with machining finish.
9. Welding symbol with grinding finish is represented by _____.
10. _____ is the welding process designation for oxy-acetylene welding.
11. Carbon arc welding is represented by _____ .
12. If a weld is to have a flat finish, _____ should be added above the symbol.

CHAPTER 12

1. Journal bearings can support only _____ _____.
   (*a*) axial loads (*b*) radial loads (*c*) inclined loads
2. Thrust bearings are mainly used to resist radial loads (True/False).
3. A pivot bearing is used for horizontal shafts (True/False).
4. A collar thrust bearing is generally used on horizontal shafts (True/False).
5. Bearings are classified into _____ and _____ categories.
6. In a journal bearing, the load is in _____ direction to the shaft axis.
7. _____ bearing is used for long shafts requiring intermediate support.
8. Snug is provided to the brasses to prevent _____.
9. Hangers are used to support line shafts (True/False).
10. _____ bearing supports a shaft running parallel to a wall.
11. The size of the wall bracket depends on the biggest size of the pulley mounted on the shaft (True/False).
12. The size of the pillar bracket depends on the size of the pulley mounted on the shaft (True/False).
13. Ball bearings are used to resist axial loads on shafts (True/False).
14. Roller bearings are used to resist normal loads acting on shafts (True/False).
15. The bearing designation 308 represents _ _ _ _ _ .
16. Locking washer is used to prevent the _____ movement of the bearing.

CHAPTER 13

1. Chains are positive drive machine elements (True/False).
2. Gears are positive drive power transmission machine elements (True/False).
3. _____ chains are used for bicycles.
4. Inverted tooth chains are also called silent chains (True/False).
5. The distance between the centres of the articulating joints is called _____.
6. Smaller sprockets are known as _____ .

www.EngineeringBooksPdf.com

7. The chain consists of integer number of pitches with _____ number preferably.
   (*a*) Odd (*b*) Even
8. Gears are used for power transmission from one shaft to another, when the centre distance between them is _____.
   (*a*) small (*b*) large
9. A module is always expressed in _____.
   (*a*) mm (*b*) cm
10. Helical gears are used to connect _____ shafts.
   (*a*) Non-parallel (*b*) Parallel
11. A herring bone gear is a _____ gear.
12. The rack and pinion arrangement is used to transform rotary motion into translatory motion but not vice versa (True/False).
13. The addendum is equal to module in spur gears (True/False).
14. Worm gearing is used for speed reducers (True/False).
15. _____ gearing is suitable for two shafts at 90°.

CHAPTER 14

1. A fixture is used to guide the tool (True/False).
2. A jig is used to guide the tool (True/False).
3. A workpiece is represented in _____ _____ lines in jig or fixture drawing.
4. In jigs and fixtures drawing, workpiece is considered as transparent (True/False).
5. Workpiece location should prevent _____ degrees of motion.
   (*a*) 6 (*b*) 3 (*c*) 4
6. The inside diameter of a drill bush is ground to a running fit _____.
7. The outside diameter of a drill bush with press fit is _____.
   (*a*) p6 (*b*) h6 (*c*) f6
8. _____ are provided to the fixture to locate it with respect to machine axis.
9. _____ weight is provided on a turning fixture base.
10. To set the cutter, _____ block is provided on milling fixtures.

CHAPTER 15

1. The extreme permissible size for any dimension of a part is _____.
   (*a*) limit (*b*) nominal size (*c*) tolerance
2. Tolerance is denoted by number symbol followed by a letter symbol (True/False).
3. Fundamental tolerances are given for letter symbols (True/False).
4. Upper deviation for hole is indicated as EI (True/False).
5. ES stands for E'cart _____.
6. EI stands for E'cart _____.
7. The algebraic difference between the maximum limit and nominal size is known as _____ .
   (*a*) Deviation (*b*) Upper deviation (*c*) allowance
8. The grade of tolerance obtained by centre lathe turning is _____.
9. Honing produces the tolerance grade of _____.
   (*a*) 10 (*b*) 15 (*c*) 6 (*d*) 0

www.EngineeringBooksPdf.com

10. In unilateral tolerance, the limits will be on _____ _____ of the basic size.
11. In bilateral tolerance, the limits are on _____ _____ of the basic size.
12. _____ basis system of fits are normally used.
13. In hole basis system, the lower deviation is _____ for the letter symbol H.
14. Shaft basis system is preferred in _____ industries.
    (*a*) Textile (*b*) Automobile (*c*) Aircrafts
15. If the allowance is positive, it results in _____ _____.
    (*a*) Clearance fit (*b*) interference fit
16. If the allowance is negative, the fit is _____.
    (*a*) Interference (*b*) Clearance (*c*) Transition
17. For shrink fit with a hole of H8, the shaft tolerance is given by _____.
    (*a*) n6 (*b*) c7 (*c*) U8
18. A clearance fit is obtained from _____.
    (*a*) H7/n6 (*b*) H7/g6 (*c*) H7/m6
19. The fit recommended on shaft for ball bearing mounting is _____.
    (*a*) H7/g6 (*b*) H7/f6 (*c*) H7/m6
20. The fundamental deviations are given in _____ units.
21. Fundamental tolerance of a shaft of size 30 mm for grade 6 is _____.
22. Fundamental deviation of shaft of size 18 mm and letter symbol 'f' is _____.
23. Lower deviation of a hole of size 30 H7 is _____.
24. The lower deviation of 30m6 is _____.
25. The upper deviation of 30m6 is _____.

CHAPTER 16

1. Higher the smoothness of the surface, better is the corrosion resistance (True/False).
2. With better surface finish, friction between mating parts is not reduced (True/False).
3. Surface roughness is indicated by _____.
    (*a*) R_t (*b*) R_a
4. Surface flatness is measured by _____.
    (*a*) Micrometer (*b*) Feeler guage (*c*) Optical flat
5. Roughness value R_a is given in _____ units.
6. The R_a value for turning is _____ to _____.
7. The R_a value for honing is _____.
    (*a*) 0.025 (*b*) 0.4 (*c*) 0.015
8. The roughness value for lapping is _____.
    (*a*) 0.012 (*b*) 0.06 (*c*) 0.04
9. The roughness value for super finishing is _____ to _____.
10. The roughness value for forging is _____ to _____.
11. The roughness grade for 50 μm is _____.
12. The roughness value for grade N2 is _____.
13. Lay indicates the surface finish pattern (True/False).
14. Two triangles indicate _____ _____.
    (*a*) Fine finish (*b*) Rough finish

www.EngineeringBooksPdf.com

Answers

CHAPTER 1

1. (*b*) 2. (*b*) 3. (*b*) 4. (*a*) 5. (*a*)

CHAPTER 2

1. (*a*) 2. (*a*) 3. (*a*) 4. (*b*) 5. (*b*) 6. (*a*) 7. (*a*) 8. (*b*) 9. (*b*) 10. F 11. F 12. F 13. F 14. T 15. F 16. F 17. T 18. F 19. T 20. F 21. T 22. F 23. T 24. F 25. A4 26. First angle 27. 170 × 65 28. once 29. mm 30. visible 31. Crossing 32. dotes 33. thin 34. Thin lines 35. Thick lines 36. 75° 37. dotted 38. hatching 39. 3:1 40.30 41. above 42. Uni-directional 43. along 44. dash 45. Staggered 46. Capital, standard 47. Spot facing 48. undercut 49. cast steel 50. Chromium steel 51. (*a*) Across corners (*b*) cylinder (*c*) Diameter (*d*) Equi-space (*e*) Hexagonal (*f*) Material (*g*) Pitch circle diameter (*h*) Radius (*i*) Tolerance 52. (*a*) CSK (*b*) DP (*c*) GND (*d*) NOM (*e*) NO (*f*) SF (*g*) SQ (*h*) SCR 53. (*a*) CS (*b*) FS (*c*) Grey I (*d*) HCS (*e*) ST (*f*) BRASS 54. (*a*) cast iron (*b*) High speed steel (*c*) spring steel (*d*) Gun metal (*e*) Wrought iron (*f*) Galvanised iron (*g*) Mild steel 55. (*a*) Diameter of 30 mm with 25 mm depth (*b*) key way of 8 mm width and 6 mm depth (*c*) Under cut of width 10 mm and depth 5 mm (*d*) Neck of width 4 mm and depth 2 mm (*e*) Morse taper 2 (*f*) ACME thread of 10mm nominal diameter 56. (*a*) DRILL DIA 15 CSK 20 (*b*) 6 HOLES, DIA 15 C' BORE DIA 20 DEEP 6 (*c*) 8 HOLES, DIA 13 EQUIP-SP C'BORE FOR M12 SOCKET HD CAP SCR (*d*) KEYSEAT WIDE 8, DEEP 6 (*e*) DIAMOND KNURL 1 RAISED 45° (*f*) CARB, HDN AND GND

CHAPTER 3

1. (*b*) 2. (*a*) 3. (*c*) 4. (*a*) 5. (*a*) 6. (*b*) 7. First angle 8. Third angle 9. Parallel 10. Horizontal, top 11. Vertical, normal 12. (*a*) below (*b*) left side` 13. (*a*) below (*b*) left, front 14. Profile, Normal, side 15. Complexity 16. True 17. False 18. True 19. True 20. False

CHAPTER 4

1. (*a*) 2. (*c*) 3. (*b*) 4. (*a, c*) 5. True 6. False 7. False 8. True 9. True

CHAPTER 5

1. Nominal diameter, pitch 2. Pitch 3. Lead 4. Single start, multi-start 5.Sharp V 6. BSW 7. Buttress 8. Square 9. ACME 10. Square 11. ACME 12. Worm 13. 60° 14. Minor, major 15. Half 16. Pitch 17. Thin, incomplete 18. Coupler nut 19. True 20. (*c*) 21. (*d*) 22. (*c*) 23. (*a*) 24. (*b*) 25. (*a*) 26. True 27. True 28. (*a*) 29. True 30. False 31. Square 32. Eye 33. False 34. False 35. Cap or dome 36. True 37. False 38. False 39. Allen key 40. Ture 41. False 42. Castle 43. False 44. eye 45. Key 46. Cotter

CHAPTER 6

1. True 2. False 3. False 4. 1:100 5. False 6. True 7. False 8. True 9. True 10. (*a*) 11. Clearance 12. Pin 13. Suspension 14. Thickness, width 15. False 16. False 17. False

www.EngineeringBooksPdf.com

CHAPTER 7

1. (*c*) 2. (a) 3. (*a*) 4. (*b*) 5. (*a*) 6. (*b*) 7. A cylindrical projection in one flange and a recess in the other 8. Bolt heads and nuts are covered by an annular projection 9. False 10. False 11. False 12. (*b*) 13. (*c*) 14. Flexible material 15. Compressible steel sleeve 16. False 17. Dis-engaging 18. Friction, claws 19. Not coaxial 20. Universal 21. Parallel 22. Rubber tyre

CHAPTER 8

1. False 2. True 3. Increasing the thickness at the flange 4. Ribs 5. (*b*) 6. (*a*) 7. Union joint 8. Union joint 9. Expansion 10. loop or corrugated fitting 11. Asbestos 12. (*b*) 13. Right angle 14. Reducing socket 15. Plug 16. Nipple 17. Male thread adapter 18. Female thread adapter 19. FTA 20. MTA 21. 20 mm 22. 1½″ 23. Solvent

CHAPTER 9

1. Split 2. Sunk 3.V 4. Opposite 5. False 6. Fast and loose 7. V 8. Flat 9. False 10. True 11. V-belt 12. Rope

CHAPTER 10

1. True 2. Caulking, fullering 3. (*a*) 4. (*b*) 5. True 6. False 7. Margin 8. true 9. Diagonal pitch 10. True 11. Strap 12. Lap 13. Butt 14. True 15. Butt 16. Greater 17. Less 18. False 19. (*b*)

CHAPTER 11

1. (*b*) 2. Welding alround 3. Filled-in circle 4. Sub-merged arc welding 5. Welding on the arrow side 6. Welding on the other side 7. Right 8. M 9. G 10. OAW 11. CAW 12. Line

CHAPTER 12

1. (*a*) 2. False 3. False 4. True 5. Sliding, rolling 6. Perpendicular 7. Pedastal 8. Relative movement 9. True 10. Bracket bearing 11. True 12. False 13. False 14. True 15. Medium series of bore 40 mm 16. Axial

CHAPTER 13

1. True 2. True 3. Roller 4. True 5. Pitch 6. Pinions 7. (*b*) 8. (*a*) 9. (*a*) 10. (*b*) 11. Double, helical 12. False 13. True 14. True 15. Bevel

CHAPTER 14

1. False 2. True 3. Chain dotted 4. True 5. (*a*) 6. F7 7. (*a*) 8. Tenons 9. Balance 10. Setting

CHAPTER 15

1. (*a*) 2. False 3. True 4. False 5. Superior 6. Inferior 7. (*b*) 8. T8 9. (*c*) 10. one side 11. both sides 12. Hole 13. Zero 14. (*a*) 15. (*a*) 16. (*a*) 17. (*c*) 18. (*b*) 19. (*b*) 20. micron 21. 13 22. – 16 23. zero 24. +8 25. +21

CHAPTER 16

1. True 2. False 3. (*b*) 4. (*c*) 5. micron 6. 0.32 to 25 7. (*a*) 8. (*a*) 9. 0.016 to 0.32 10. 1.6 to 2.8 11. N 12’ 12. 0.05 13. True 14. (*a*)

www.EngineeringBooksPdf.com

Annexure

Table 1 Tensile properties of standard steels

New Designation	*Old Designation*	σ_{Ut} N/mm^2	σ_Y N/mm^2
Fe 290	(St 30)	290	170
FeE 220	—	290	220
Fe 310	(St 32)	310	180
Fe 230	—	310	230
Fe 330	(St 34)	330	200
FeE 250	—	330	250
Fe 360	(St 37)	360	220
FeE 270	—	360	270
Fe 410	(St 42)	410	250
FeE 310	—	410	310
Fe 490	(St 50)	490	290
FeE 370	—	490	370
Fe 540	(St 55)	540	320
FeE 400	—	540	400
Fe 620	(St 63)	620	380
FeE 460	—	620	460
Fe 690	(St 70)	690	410
FeE 520	—	690	520
Fe 770	(St 78)	770	460
FeE 580	—	770	580
Fe 870	(St 88)	870	520
FeE 650	—	870	650

Table 2 Tensile properties of carbon steels (unalloyed) (stress values in N/mm^2)

Designation \ *Condition*		*Hot rolled or normalised*	*Cold drawn (20 to 40 mm dia)*	*Hardened and tempered*	*Cast hardened refined and quenched (core properties)*
New	*Old*	σ_{Ut}	σ_{Ut}	σ_{Ut}	σ_{Ut}
7C4	C07	320–400			
10C4	C10	340–420	450		500
14C6	Cl4	370–450			500
15C8	C15Mn75	420–500	510		500
20C8	C20	440–520	510		500
25C8	C25Mn75	470–570			
30C8	C30	500–600	570	600	
35C8	C35Mn75	550–650		600	
40C8	C40	580–680	610	700	
50C4	C50	600–780	630	800	

NOTE—Yield stress may be taken as 55 to 65% of ultimate stress unless otherwise specified.

www.EngineeringBooksPdf.com

Table 3 Recommended heat treatment data for carbon and alloy steels

Designation of steel	*Hot working temperature* °C	*Normalising* °C	*Hardening* °C	*Quenching*	*Tempering* °C
30C8	1200–850	860–890	860–890	Water or oil	550–660
35C8	1200–850	850–880	840–880	Water or oil	530–760
40C8	1200–850	830–860	830–860	Water or oil	550–660
45C8	1200–850	830–860	830–860	Water or oil	530–670
50C8	1150–850	810–840	810–840	Oil	550–660
55C8	1150–850	810–840	810–840	Oil	550–660
40C10S18	1200–850	830–860	830–860	Oil	550–660
40Mn2S12	1200–850	840–870	840–870	Oil	550–660
20C15	1200–850	860–900	860–900	Water or oil	550–660
27C15	1200–850	840–880	840–880	Water or oil	550–660
37C15	1200–850	850–870	850–870	Water or oil	550–660
40Cr4	1200–850	850–880	850–880	Oil	550–700
35Mn6Mo3	1200–900	—	840–860	Water or oil	550–600
35Mn6Mo4	1200–900	—	840–860	Oil	550–660
40Cr4Mo3	1200–850	850–880	850–880	Oil	550–720
40Cr13Mo10V2	1200–850	–	900–940	Oil	570–650
40Cr7A110Mo2	1200–850	–	850–900	Oil	550–700
40Ni14	1200–850	830–860	830–860	Oil	550–650
35Ni10Cr3Mo6	1200–850	—	830–850	Oil	Up to 660
40Ni10Cr3Mo6	1200–850	—	830–850	Oil	Up to 660
40Ni6Cr4Mo2	1200–850	—	830–850	Oil	550–660
40Ni6Cr4Mo3	1200–850	—	830–850	Oil	150–200 or 550–660
35Ni3Cr5	1200–850	—	810–830	Air or Oil	250

Table 4 Hardness obtained by Induction/Flame hardening

Steel designation	*Hardness, HRC*
C30	45–50
C 35 Mn 75	51–57
C 45	55–61
C 55	57–62
37 Mn 2	53–59
47 Mn 2	54–60
35 Mn 2 Mo 28	53–59
40 Cr 1	54–60
50 Cr 1	57–62
50 Cr 1 V 23	57–62
40 Cr 1 Mo 28	54–60
40 Ni 3	54–60
35 Ni 1 Cr 60	54–60
40 Ni 2 Cr1 Mo 28	54–60

www.EngineeringBooksPdf.com

Table 5 Dimensions for metric screw threads (mm)

	Size	*Pitch*	*Major diameter*	*Pitch diameter*	*Minor diameter* *Bolt*	*Nut*	*Depth of thread*
Coarse series	M2.5	0.45	2.5	2.208	1.948	2.013	0.276
	M3	0.5	3	2.675	2.387	2.459	0.307
	M4	0.7	4	3.545	3.141	3.242	0.429
	M5	0.8	5	4.480	4.019	4.134	0.491
	M6	1	6	5.350	4.773	4.918	0.613
	M8	1.25	8	7.188	6.466	6.647	0.767
	M10	1.5	10	9.026	8.160	8.376	0.920
	M12	1.75	12	10.863	9.853	10.106	1.074
	M16	2	16	14.701	13.543	13.835	1.227
	M20	2.5	20	18.376	16.933	17.294	1.534
	M24	3	24	22.051	20.320	20.752	1.840
	M30	3.5	30	27.727	25.706	26.211	2.147
	M33	3.5	33	30.727	28.706	29.211	2.147
	M36	4	36	33.402	31.093	31.67	2.454
Fine series	M8 × 1	1	8	7.350	6.773	6.918	0.613
	M10 × 1.25	1.25	10	9.188	8.466	8.647	0.767
	M12 × 1.25	1.25	12	11.188	10.466	10.647	0.767
	M16 × 1.5	1.5	16	15.026	14.16	14.376	0.920
	M20 × 1.5	1.5	20	19.026	18.16	18.376	0.920
	M24 × 2	2	24	22.701	21.546	21.835	1.227
	M30 × 2	2	30	28.701	27.546	27.835	1.227
	M36 × 3	3	36	34.051	32.32	35.752	1.840

Table 6 Tap drill sizes

Metric coarse threads				*British Standard Whitworth (BSW) threads*			
Size (mm)	*Pitch (mm)*	*Max. minor diameter (mm)*	*Drill size (mm)*	*size (inch)*	*Threads per inch*	*Max. minor diameter (mm)*	*Drill size (mm)*
1.4	0.3	1.165	1.1	1/16	60	1.231	1.2
1.6	0.35	1.321	1.25	3/32	48	1.910	1.85
1.8	0.35	1.521	1.45	1/8	40	2.590	2.55
2	0.4	1.679	1.6	5/32	32	3.211	3.2
2.2	0.45	1.838	1.75	3/16	24	3.744	3.7
2.5	0.45	2.138	2.05	7/32	24	4.538	4.5
3	0.5	2.599	2.5	1/4	20	5.224	5.1
3.5	0.6	3.010	2.9	5/16	18	6.661	6.5
4	0.7	3.422	3.3	3/8	16	8.052	7.9
4.5	0.75	3.878	3.7	7/16	14	9.379	9.2
5	0.8	4.334	4.2	1/2	12	10.610	10.5
6	1	5.153	5	9/16	12	12.176	12
7	1	6.153	6	5/8	11	13.598	13.5
8	1.25	6.912	6.8	3/4	10	16.538	16.5
9	1.25	7.912	7.8	7/8	9	19.411	19.25
10	1.5	8.676	8.5	1	8	22.185	22
11	1.5	9.676	9.5	1 1/8	7	24.879	24.75
12	1.75	10.441	10.2	1 1/4	7	28.058	28
14	2	12.210	12	1 3/8	6	30.555	30.5
16	2	14.210	14	1 1/2	6	33.730	33.5

(Contd.)

www.EngineeringBooksPdf.com

Table 6 Tap drill sizes

Metric coarse threads				*British Standard Whitworth (BSW) threads*			
Size (mm)	*Pitch (mm)*	*Max. minor diameter (mm)*	*Drill size (mm)*	*size (inch)*	*Threads per inch*	*Max. minor diameter (mm)*	*Drill size (mm)*
18	2.5	15.744	15.5	1 5/8	5	35.921	35.5
20	2.5	17.744	17.5	1 3/4	5	39.096	39
22	2.5	19.744	19.5	1 7/8	4 1/2	41.648	41.5
24	3	21.252	21	2	4 1/2	44.823	44.5
27	3	24.252	24				
30	3.5	26.771	26.5				
33	3.5	29.771	29.5				
36	4	32.270	32				
39	4	35.270	35				
42	4.5	37.799	37.5				

Table 7 Properties and uses of irons, plain-carbon steels and alloy steels

Material and approximate composition (%)	*Tensile strength (Mpa)*	*Typical uses*
Wrought iron Fe (almost pure)	340	Chain links, ornamental work, etc.
Grey cast irons (3-4) C, (1.2-2.8) Si, (0.5-1) Mn	170–350	Brackets, machine frames, pistons, cylinders, pipes, pulleys, gears, bearings, slides, etc.
Malleable irons (2-3) C, (0.1-0.5) P, (0.5-6) S, (1-5) Si, (0.4-2.1) Ni, (0.1-5) Cr	280–510	Brake drums, levers, links, shafts, hinges, spanners, chains, wheels, vice bodies, etc.
Spheroidal-graphite (SG) irons Nodular irons	370–725	Machine frames, pump bodies, pipes, crankshafts, hand tools, gears dies, office equipment, etc.
Low-carbon steels (up to 0.25) C	430–480	Lightly stressed parts, nails, car bodies, chains, rivets, wire, structural parts, etc.
Medium-carbon steels (0.25-0.6) C	480–620	Axles, spindles, couplings, shafts, tubes gears, forgings, rails, hand tools, dies, ropes, keys, etc.
High-carbon (tool) steels (0.6-1.5) C	620–820	Hammers, chisels, screws, drills, taps, dies, blades, punches, knives, chisels, saws, razors.
Nickel steels (0.1-4) C, (0.04-1.5) Mn, (1-5) Ni	310–700	Axles, crankshafts, car parts, camshafts, gears, pins, pinions, etc.
Stainless steels (0.05-0.1) C, (0.8-1.5) Mn, (8.5-18) Ni, (12.5-18) Cr	650-900	Chemical plants, kitchen equipment, cutlery, springs, circlips, etc.
Low-alloy nickel-chrome steels (1-5) Ni, (0.6-1.5) Cr	930–1500	Highly stressed parts: conrods, shafts, gears, driving shafts, crankshafts, etc.
Manganese steels (0.35-1.2) C, (1.5-12.5) Mn	700–850	Cutting tools, stone crushing jaws, dredging equipment, press tools, railway crossings, etc.
Heat-resisting steel (0.1) C, (1.5) Si , (1) Mn, (19) Cr, (1) Ni	690	Components exposed to high temperatures, etc.

www.EngineeringBooksPdf.com

Table 8 Properties and uses of aluminium alloys and copper alloys

Material and approximate composition (%)	*Tensile strength (Mpa)*	*Typical uses*
Aluminium Al (almost pure)	55–140	Electrical cables, reflectors, cooking utensils, radiators, piping, building components, paints, etc.
Aluminium-silicon alloy (88) Al, (12)Si, traces of Fe and Mn	280–140	Light castings, aircraft & marine applications, radiators, crank cases, gear boxes, etc.
Duralumin (4)Cu, (0.8)Mg, (0.5)Si, (0.7)Mn	450–550	General purposes, stressed aircraft components, structural components, etc.
Copper Cu (almost pure)	220–350	Chemical industry, heating equipment, cooking utensils, tubing, roofing, boilers, etc.
Cartridge brass (70)Cu, (30)Zn	325-650	Cartridge, shells, jewellery, etc.
Yellow brass or Muntz metal (60)Cu, (40)Zn	Hard	Structural plates, tubing, valve rods, hot forgoings, etc.
Commercial brass (90)Cu, (10)Zn	280–510	Imitation jewellery, lipstick cases, clamps, etc.
Tin bronze (89)Cu, (11)Zn	220–310	Bearings, bushes, gears, piston rings, pump bodies, etc.
Gun-metal (tin bronze) (88) Cu, (10)Sn, (2)Zn	270–340	bearings, steam valve bodies, marine castings, structural parts, etc.
Aluminium bronze (91–95)Cu, (5–9)al	370–770	High wear and strength applications, marine hardware, etc.
Phosphor bronze (86-90.7)Cu, (9-13)Sn, (0.3-1)P	220–420	Bearings, bushes, valves, general sand castings, etc.
High-lead tin bronze (76)Cu, (9)Sn, (15)Pb	170–310	General purpose bearing and bushing alloy, wedges, etc.
Monel metal (30)Cu, (1.4)Fe, (1)Mn, (67.6)Ni	600–950	Chemical engineering, propeller shafts, high-temperature valve seats, high strength components, etc.

www.EngineeringBooksPdf.com

Table 9 Properties and uses of plastics

Group	*Compound*	*Tensile strength (Mpa)*	*Typical uses*
Cellulosics	Cellulose nitrate (Celluloid)	50	Handles, piano keys, toilet seats, fountain pens, spectacle frames, instrument labels, etc.
	Cellulose acetate (Tricel)	20–60	Photographic film, artificial leather, lamp shades, toys, combs, cable covering, tool handles, etc.
Vinyls	Polyvinyl chloride (Rigid PVC) (Plasticized PVC)	50	Pipes, bottles, chemical plant, lighting fittings, curtain rails, cable covers, toys, balls, gloves, etc.
	Polypropylene	35	Pipes and fittings, bottles, crates, cable insulation, tanks, cabinets for radios, shoe heels, pumps, etc.
	Polystyrene	50	Vending machine cups, housings for cleaners and cameras, radio cabinets, furniture, toys, etc.
Fluorocarbons	Polytetrafluorethylene (PTFE), ('Teflon', etc.)	21	Excellent Bearings, gaskets, valves, chemical plant, electrical-insulation tapes, non-stick coatings for frying pans.
Polyamides	Nylon 66	70	Bearings, gears, cams, pulleys, combs, bristles for brushes, ropes, fishing lines, raincoats, containers.
Acrylics	Polymethylmethacrylate ('Perspex', 'Plexiglas', etc.)	55–80	Lenses, aircraft glazing, windows, roof lighting, sinks, baths, knobs, telephones, dentures, machine guards.
Phenolics	Phenol formaldehyde ('Bakelite', etc.)	50–60	Vaccum cleaners, ashtrays, buttons, cameras, electrical equipment, dies, handles, gears, costume jewellery.
	Melamine and Urea formaldehyde	45–75	Electrical equipment, handles, cups, plates, trays, radio cabinets, knobs, building panels, etc.
Epoxides	Epoxy resins ('Bakelite', 'Araldite', etc.)	60	Adhesives, surface coatings, flooring, electrical insulation, glass-fibre laminates, furniture, etc.
High-pressure laminates	Laminates ('Tuflon', 'Formica', etc.)	12–80	(Paper 1's) electrical insulation, (Fabric 1's) gears, bearings, jigs, aircraft parts, press tools, (Decorative 1's) table tops, trays.

www.EngineeringBooksPdf.com

Table 10 SI units

Sl. No.	*Physical quantity*	*Name of SI Unit*	*Symbol*
		BASIC SI UNITS	
1.	Length	metre	m
2.	Mass	kilogram	kg
3.	Time	second	s
4.	Electric current	ampere	A
5.	Thermodynamic temperature	kelvin	K
6.	Luminous intensity	candela	cd
		DERIVED SI UNITS	
1.	Frequency	hertz	Hz = 1 c/s
2.	Force	newton	N = kg m/s^2
3.	Work, energy, quantity of heat	joule	J = Nm
4.	Power	Watt	W = J/s
5.	Area	square metre	m^2
6.	Volume	cubic metre	m^3
7.	Density (mass density)	kilogram per cubic metre	kg/m^3
8.	Velocity	metre per second	m/s
9.	Angular velocity	radian per second	rad/s
10.	Acceleration	metre per second squared	m/s^2
11.	Angular Acceleration	radian per second squared	rad/s^2
12.	Pressure (stress)	newton per square metre	N/m^2
13.	Dynamic viscosity	newton second per square metre	Ns/m^2
14.	Kinematic viscosity	square metre per second	m^2/s
15.	Entropy	joule per kelvin	J/K
16.	Specific heat	joule per kilogram kelvin	J/kg K
17.	Thermal conductivity	watt per metre kelvin	W/mK

www.EngineeringBooksPdf.com

INDEX

A

Assembly drawing 264
- air cock 310
- air valve 276
- blow off cock 310
- bushed pin type flanged coupling 323
- C-clamp 331
- clapper block 285
- crane hook 332
- crosshead 265
- drill jig 298
- eccentric 273
- feed check valve 310
- floating reamer holder 294
- footstep bearing 329
- four jaw chuck 299
- fuel injector 276
- gate valve 303
- indexing drill jig 299
- knuckle joint 322
- lathe tail-stock 289
- lever safety valve 315
- machine vice 294
- marine engine connecting rod end 267
- milling machine tail-stock 289
- multiplate friction clutch 279
- non-return valve 306
- Oldham coupling 324
- pipe vice 335
- piston 270
- plummer block 327
- pressure relief valve 314
- protected flanged coupling 323
- radial engine sub assembly 271
- Ramsbottom safety valve 318
- revolving center 291
- rotary gear pump 273
- screw down stop value 306
- screw jack 335
- self-centring chuck 299
- shaper tool head slide 287
- single plate clutch 276
- single tool post 284
- socket and spigot joint 321
- speed reducer 335
- spring loaded relief valve 318
- square tool post 284
- steam engine connecting rod end 265
- steam engine crosshead 265
- stuffing box 265
- swivel bearing 329
- swivel machine vice 294
- universal coupling 326
- v-belt drive 334

B

Bearings 176
- rolling contact 183
  - radial 184
  - thrust 185
- sliding contact 176
  - footstep 181
  - journal bearing 176

Blueprint reading 251

Bolted joint 85

Bolts
- foundation 98
- other forms of 91

C

Conventional representation 24
- machine components 24
- materials 24

www.EngineeringBooksPdf.com

Cotter joints 109
Chain drives 189
  roller chains 189
Computer aided draughting 397
  basic geometric commands 403
  creation of 3D primitives 414
  creation of composite solids 415
  types of modeling 411
Cutting planes 21

D

Dimensioning 25
  method of execution 28
  principle of 25
Dimensions
  arrangement of 32
  chain 32
  combined 32
  parallel 32
Drawing sheet 10
  borders and frames 11
  centering marks 12
  grid reference system 13
  metric reference graduation 12
  sizes 10
  title block 11
  trimming marks 13
Drawings 2
  assembly drawing 3
  machine drawing 2
  machine shop drawing 5
  one view 48
  part drawing 2
  patent drawing 9
  principles of 10
  production drawing 2
  sub-assembly drawing 3
  three view 50
  two view 48

F

Fits 228
  clearance 227
  interference 228
  transition 227
Fixtures
  components of 204
  types of 205

G

Gearing
  bevel 197
  helical 196
  spur 195
  worm and worm gear 197
Gears 191
  types of 191
Graphic language 1
  importance of 1

J

Jigs
  components of 200
  types of 203

K

Keys 103
  feather 106
  saddle 103
  splines 107
  sunk 105
  wood rough 108
Knuckle joint 113

L

Leader lines
  termination of 17
Lettering 18
  dimensions 18
Limit system 208
Lines 14
  thickness 15

N

Nuts
  locking arrangements 94
  other forms of 91

O

Objective questions 428
Orthographic projections 43

P

Part drawings 355
  angle plummer block 381
  automobile gear box 362
  blow-off cock 376

www.EngineeringBooksPdf.com

castor wheel 388
diaphragm regulator 381
indexing drill jig 376
lathe slide rest 366
lathe speed gear box 368
lathe travelling rest 370
marine engine connecting rod end 357
milling fixture 376
milling machine tail stock 370
petrol engine connecting rod 356
pierce and blank tool 376
Ramsbottom safety valve 381
self centering vice 370
spark plug 357
speed reducer 388
split sheave eccentric 366
steam engine connecting rod end 357
steam stop valve 381
steam, engine crosshead 357
tool post 366
Pipe fittings 135
Pipe joints 127
expansion 133
socket and spigot 131
union join 131
Production drawings 389
types of 389
Pulleys 142
fast and loose 145
flat belt 142
rope 147
v-belt 145

R

Riveted joints 180
classification of 152
Rivet heads 151
Riveting 150

S

Scales 13
designation 13
recommended 13
specification 13
Screwed fastenes 77
Screw thread
designation 81
forms of 78
nomenclature 77
representation of 82
set screws 93
thread series 80
Sectional view 64
auxiliary section 66
full section 64
half section 65
Shaft couplings 115
claw 120
cone 122
cushion 125
fiexible 119
oldham 124
rigid 115
universal 123
Standard abbreviations 37
Surface roughness 242
indication of 245
symbols 245

V

Views
designation of 45
presentation of 45
relative positions of 45
selection of 47
spacing of 50

W

Welded joints 161
symbols 161
Welds
dimensioning of 168
edge preparation of 168

www.EngineeringBooksPdf.com